COUNTY OF COLUSA
BOARD OF SUPERVISORS

Board Chambers
546 Jay Street, Suite 108
Colusa, CA 95932

November 4, 2025 at 9:00 AM

J. Merced Corona, District I
Daurice K. Smith, District II
Kent S. Boes, District III,
Randy Wilson, District IV
Janice A. Bell, District V
(530) 458-0508/0509
FAX (530) 458-0510
https://countyofcolusaca.gov

Welcome to a meeting of the Colusa County Board of Supervisors. If you are scheduled to address the Board, please state your full name for the record. All items are listed in accordance with the Ralph M. Brown Act. We invite all members of the public to attend.

NOTE: You can listen to the meeting by dialing one of the numbers below:

Phone: 1-916-246-0723
Toll-Free: 1-800-356-8278
Code: 401978 - THIS LINE IS FOR LISTENING IN ONLY

PERIOD OF PUBLIC COMMENT: Any person may comment on subjects not already on the agenda, within the purview of the Board of Supervisors. The total amount of time allotted for receiving such public communication shall be limited to a total of 15 minutes per issue and each individual or group will be limited to no more than 5 minutes each. Note: No Board action shall be taken on comments received.

ACCESSIBILITY: Upon request, Agendas may be made available in alternative formats to reasonably accommodate persons with disabilities. Additionally, persons with a disability may request a reasonable accommodation if needed to attend this meeting. Please make your request to the County Board Clerk, specifying your disability, the format in which you would like to receive this Agenda, and any other accommodation request as soon as possible before any meeting, preferably within 48 hours prior to the meeting's scheduled start.

All supporting documentation is available for public inspection and review in the Office of the Board Clerk, 547 Market Street, Suite 102, Colusa, CA 95932 during regular business hours 8:30 a.m. to 5:00 p.m., Monday through Friday.

CALL TO ORDER

- Opening Prayer - Pledge of Allegiance
- Period of Public Comment
- Report out of October 21, 2025 Closed Session
- Announcement of Closed Session

I. STAFF REPORTS

Note: 5 minutes allowed per Department for Staff Reports. This time is available for any County

Staff who may wish to update the Board of Supervisors on projects as they relate to their respective departments.

CONSENT AGENDA

Approve Consent Agenda Item No.'s 1 through 10.

1. **ADMIN**
   Approve the October 21, 2025 Regular Minutes

2. **HEALTH AND HUMAN SERVICES**
   Approve funding application with the California Department of Public Health (CDPH) effective July 1, 2025, and authorize the Department of Health and Human Services staff to sign related documents.

3. **TREASURER/TAX COLLECTOR**
   Accept September 2025 Treasury Monthly Investment Report as presented.

4. **DISTRICT ATTORNEY**
   Authorize the District Attorney to annually apply for the Victim Witness Assistance Program Grant Subaward through the California Governor's Office of Emergency Services and further authorize the District Attorney to execute any resulting grant subaward and related agreements subject to prior approval by the Board of Supervisors.

5. **CLERK-RECORDER REGISTRAR OF VOTERS**
   Adopt a Resolution Appointing Nominees to the office of their respective Districts in lieu of election pursuant to Water Code 50742 and Election Code 10515(b).

6. **CLERK-RECORDER REGISTRAR OF VOTERS**
   Adopt a Resolution Appointing Directors to Districts in lieu of Election pursuant to Election Code 10515 et seq.

7. **DISTRICT ATTORNEY**
   Approve 2nd Modification with the **Colusa County Office of Education (CCOE)** for participation in the School Attendance Review Board (SARB) program, effective August 1, 2025.

8. **DISTRICT ATTORNEY**
   Approve a Proposal with **Advanced Document Concepts** for maintenance services and Lease Agreement with **US Bank Equipment Finance** for copier/printer lease for the District Attorney and authorize the Purchasing Agent to sign.

9. Approve Contract with **Woida Enterprises Inc., dba Arrow Fencing** for the Sheriff's Office Fencing Project.

10. **COUNTY ADMINISTRATIVE OFFICE**
    Appoint Assistant County Administrative Officer and County Counsel as real property negotiators for property located at 90 King Air Drive, Colusa, CA and 284 Piper Lane, Colusa, CA.

END OF CONSENT AGENDA

II. HUMAN RESOURCES

1. Approve Memorandums of Understandings (MOU's) with the Colusa County Employees

Associations (CCEA)**; Miscellaneous, Confidential and Professional-Administrative Units,** effective October 1, 2025.

III. BEHAVIORAL HEALTH

1. **BEHAVIORAL HEALTH (BH)**
   Approve Agreement with **Evolve Growth Initiatives, LLC, dba Evolve Treatment Centers** for residential treatment services for teens, effective September 1, 2025.

IV. COUNTY ADMINISTRATIVE OFFICE

1. Approve FY25-26 Revenue and Appropriations Inter-Budget Adjustment No.'s IB-005 - IB-006. **(4/5th vote required)**

V. BOARD OF SUPERIVORS

1. Provide direction for the upcoming NACo Rural Energy Academy Peer Exchange in Gilliam, Sherman, and Wasco Counties, Oregon from December 1-3, 2025 and authorize out-of-state travel for selected attendee.

2. **BOARD OF SUPERVISORS**
   Sitting as the Air Pollution Control District
   Discuss and potentially approve the proposed MOU between Colusa County Air Pollution Control District and **Glenn County Air Pollution Control District** for the administration of the Off-Site Mitigation Program and authorize the Air Pollution Control Officer to sign.

3. Annual update regarding Williams Settlement Site Visit

VI. SUPERVISORS' REPORTS OR COMMENTS

VII. STATE OR FEDERAL LEGISLATION/GENERAL BUDGETARY MATTERS

RECESS

VIII. CLOSED SESSION/COUNTY COUNSEL

1. CONFERENCE WITH LABOR NEGOTIATOR, California Government Code 54957.6
   Agency Negotiator: Dar Rhodes, Kaline Moore and Yareli Mora
   Employee Organizations: Colusa County Management Coalition and Colusa County Deputy Sheriff Association

2. CLOSED SESSION: PUBLIC EMPLOYMENT DISCIPLINE/DISMISSAL/RELEASE
   California Government Code 54957(b).

3. CONFERENCE WITH REAL PROPERTY NEGOTIATORS (California Govt Code 54956.8)
   Property: 90 King Air Drive, Colusa, Ca and 284 Piper Lane, Colusa, Ca.
   Property owner: Colusa Estates, LLC.
   Proposed Purchaser: Colusa County
   Negotiators: Assistant CAO and County Counsel
   Under negotiation: Price and Terms of Sale

4. EMPLOYEE PERFORMANCE EVALUATION
   California Government Code section 54957(b). Title: Interim County Administrative Officer.

PUBLIC HEARINGS

1. Public Hearing and Adoption of a Resolution approving the Maxwell Community Plan and finding the project is exempt from the California Environmental Quality Act (CEQA).

2. Public Hearing and Adoption of an Ordinance, read by title only, approving a Development Agreement with the Sites Project Authority for the development and operation of the Sites Reservoir Project.

ADJOURN

Colusa County

Agenda Request Form

Item ID#: 2025-78 **Agenda Date:** 11/4/2025 **Item 1**

ADMIN

Approve the October 21, 2025 Regular Minutes

Detailed Description/Background of Request
The Board of Supervisors held a duly noticed Regular/Special meetings and the Clerk is requesting approval of said minutes.

Fiscal Impact/Funding Source
None.

Action for the Clerk

Prior Board Action
Print minutes on special paper for Minutes book, obtain signature, add to Minutes book and distribute accordingly. Scan into Laserfiche

Attachments:
None

Colusa County

Agenda Request Form

Item ID#: 2025-51 **Agenda Date:** 11/4/2025 **Item 2**

HEALTH AND HUMAN SERVICES

Approve funding application with the California Department of Public Health (CDPH) effective July 1, 2025, and authorize the Department of Health and Human Services staff to sign related documents.

Detailed Description/Background of Request

Approve a funding application with the California Department of Public Health (CDPH) Maternal, Child and Adolescent Health (MCAH) Division, for funding period FY 2025-2026, effective July 1, 2025. Further, authorize the Department of Health and Human Services Public Health and Fiscal staff to sign related documents required by the California Department of Public Health (CDPH).

The Public Health unit of the Department of Health and Human Services (DHHS) oversees the Maternal, Child and Adolescent Health (MCAH) program to help ensure that low-income young mothers and their children receive health care during pregnancy, after birth and into childhood. Providing young mothers and their children with early access to health care helps prevent future health problems. The MCAH program also provides education and information to mothers, such as the importance of breastfeeding, the prevalence of obesity in today's children and the dangers associated with the development of diabetes.
DHHS has operated the MCAH program for over fifteen years and each year the California Department of Public Health (CDPH) requires DHHS to submit a funding application in order to receive funding to operate the MCAH program.

Fiscal Impact/Funding Source
This is a revenue funding application in the amount of $107,153.72. There is no impact on the County General Fund.

Action for the Clerk
Please obtain the required signature of the Board Chair on the Agency Information Form attached and forward signed to Mariza Manson at DHHS for submission to CDPH.

Prior Board Action
Approved FY24/25 on October 15, 2024
Approved FY23/24 on September 12, 2023
Approved FY22/23 on August 2, 2022

Attachments:

1. 202506 MCAH 10 SOW 06.20.25
2. 2 202506 Agency Information Form 10.28.25_edited
3. 202506 MCAH 5 Budget Template 07.29.25 pdf

California Department of Public Health (CDPH)
Maternal, Child and Adolescent Health (MCAH) Division
Local MCAH Scope of Work (SOW)

The Local Health Jurisdiction (LHJ), in collaboration with the CDPH/MCAH Division, shall strive to develop systems that protect and improve the health of California's women of reproductive age, infants, children, adolescents and their families.

The development of the Local MCAH SOW was guided by several public health frameworks including the ones listed below. Please consider integrating these approaches when conceptualizing and organizing local program, policy, and evaluation efforts.

- The Ten Essential Services of Public Health
- The Spectrum of Prevention
- Life Course Perspective and Social Determinants of Health
- Policy Systems and Environmental Change (PSE) - (TBD)

All Title V programs must comply with the MCAH Fiscal Policy and Procedures Manual and the Local MCAH Program Policies and Procedures Manual.

Certification by MCAH Director:	Name: Stephanie Rosas, MPH Title: MCAH Director Date: 5/20/2025 *I certify that I have reviewed and approved this Scope of Work.*

Note:

- The Title V Maternal and Child Health Block Grant provides core funding to California to improve the health of mothers and children. The Title V Block Grant is federally administered by the Health Resources and Services Administration.
- CDPH/MCAH may post SOWs on the CDPH/MCAH website.
- CDPH/MCAH is available to provide technical assistance for any required activity and encourages LHJs to communicate their training needs.

FINAL

Section A: General requirements and activities for all LHJs

Aligns With	General Requirement(s)	Required Local Activities	Time Frame	Deliverable Des
Title V and CDPH/MCAH Requirement	Local MCAH Annual Report	**A1** Complete and submit an Annual Report each fiscal year to report on Scope of Work activities	Annually, each fiscal year	The Annual Report will report on progress of p which the LHJ met the SOW goals and deliver In addition to reporting on the status of activiti shall report on the following counts of individu • **the number of** *Pregnant Individuals* **ser** • **the number of** *Infants (less than 1 year* • **Of the** Infants (less than 1 year of age) **i are** *Children and Youth with Special He* • **the number of individuals** *Ages 1-21* **s** • **Of the individuals** Ages 1-21 **in the ab** • **the number of** *Other** **individuals serv **Other: Individuals that cannot be grouped in Men and women 22 and over; any individuals information. Families with unspecified family category: count the family as one (1). (We ack following the "verifiable data source" guideli Guidance for Counting Individuals served are Report Instruction Manual and is sent out from Annual Report request.
CDPH/MCAH Requirement	Workforce Development and Training	**A2** Attend required trainings/meetings as outlined in the MCAH Program Policies and Procedures. • The MCAH Director or designee is required to attend the spring and fall MCAH Action meetings • SIDS Coordinators are required to attend the SIDS Annual	Annually, each fiscal year	Report attendance in Annual Report: • MCAH Directors' Spring and Fall mee • SIDS Coordinators' Annual meeting

		Conference, SIDS Advisory Council meetings		
CDPH/MCAH Requirement	MCAH Director	**A3** Maintain required MCAH Director position as outlined in the MCAH Policies and Procedures.	Ongoing	The LHJ must submit a Local MCAH Director AFA process and resubmit with any changes.
CDPH/MCAH Requirement	Community Resource and Referral Guide	**A4** Develop a comprehensive MCAH resource and referral guide of available health, mental health, emergency resources, and social services. *QI Opportunity!* Partner (participate in short-term workgroup, or respond to a survey, or discuss among other MCAH Directors at MCAH Directors call) with CDPH/MCAH and a workgroup of LHJs to develop a shared approach to an up-to-date and accessible local resource guide that supports all five MCAH population domains, in collaboration with strategic partners and existing systems, such as United Way/211.	By end of 2025	Report in Annual Report: • Submit/upload a copy or link to the ex • Report on how you have aligned your recommendations of the workgroup, w
CDPH/MCAH Requirement	Protocols	**A5** Develop and adopt protocols to ensure that MCAH clients are provided information and referred to health insurance coverage options, including how to access a provider and preventive health visits.	Annually, each fiscal year	Report on linkage/referral protocols for each o opportunities for further improvement in the A
Title V Requirement	Conduct Local Needs Assessment	**A6** Conduct or leverage existing local needs assessment(s) to acquire an accurate picture of the strengths, weaknesses and needs across the MCAH population health domains.	Approximately every three to five years	Report on Local Needs Assessment findings as

FINAL

Section B: Domain specific requirements and activities

Aligns With	General Requirement(s)	Required Local Activities	Time Frame	Deliverable Des
CDPH/MCAH Requirement	Infant – Sudden Infant Death Syndrome/Sudden Unexpected Infant Death (SIDS/SUID)	**B1** **Required for Infant Domain - all LHJs** Provide SIDS/SUID grief and bereavement services and supports through home visits and/or mail resource packets to families experiencing an infant loss.	Annually, each fiscal year	Report on SIDS/SUID services and supports ir
CDPH/MCAH Requirement	Infant – Sudden Infant Death Syndrome/Sudden Unexpected Infant Death (SIDS/SUID)	**B1.a.** Submit Public Health Services Report Form of a sudden, unexpected infant death to the CDPH/MCAH.	As needed	Submit form in the event of a sudden, unexpec
CDPH/MCAH Requirement	Infant – Safe Sleep	**B2** **Required for Infant Domain - all LHJs** Promote the latest AAP Safe Sleep guidance and implement Infant Safe Sleep Interventions to reduce the number of SUID related deaths.	Annually, each fiscal year	Report on safe sleep activities in the Annual R
CDPH/MCAH Requirement	Child Health - Schools Collaboration	**B3** *New! Replaced B3 and B4* **Required for Child Domain - all LHJs** Explore opportunities to partner with local education agencies/school districts/schools (preschool through 12th grade and alternative education settings) to collaborate on school-linked/school-based health promotion and services and safe and supportive school climates.	Annually, each fiscal year	Report on school-linked/school-based collabor
CDPH/MCAH Requirement	Children and Youth with Special Health Care needs (CYSHCN)	**B4** *New! Replaced B5 and B6* **Required for CYSHCN Domain - all LHJs** Strengthen referral pathways and service coordination strategies to connect	Annually, each fiscal year	Report on referral pathways and service coordi Report.

		CYSHCN and their families to safety net and/or social supports, medical service providers, public health programs and Family Resource Centers, as appropriate.		
CDPH/MCAH Requirement	Infant – Infant Mortality Reviews	**B5** **Required for CA FIMR+ funded LHJs only** LHJs funded for infant mortality reviews will implement activities in accordance with Local MCAH Program Policies and Procedures.	Annually, each fiscal year	Report on activities in the Annual Report.

FINAL

Section C: Local Activities by Domain

At least one activity must be selected or the LHJ must develop at least one activity of their own in the Women/Maternal Healt

Woman/Maternal Health Domain	
Women/Maternal Priority Need: *Advance Black birth equity by supporting women and birthing people to thrive through pregnancy and the postpartum p*	
Performance Measures (National/State Performance Measures)	**NPM: Postpartum Visit:** A) Percent of women who attended a postpartum checkup within 12 weeks after giving birth, and B) Percent of women who attended a postpartum checkup and received recommended care components
Women/Maternal State Objective 1: By 2030, reduce the rate of pregnancy-related cardiovascular deaths from 3.3 per 100,000 live births (2019-2021 CA-PMSS) to 3.0 per 100,000 live births. **Women/Maternal State Objective 2:** By 2030, reduce the rate of pregnancy-related deaths among Black birthing people from 49.7 per 100,000 live births (2019-2021 CA-PMSS) to 42.3 per 100,000 live birt	

Women/Maternal Focus Area 1: Access to Quality Care & Services		
Women/Maternal Access to Quality Care & Services: Strategy 1: Improve systems of risk-appropriate maternity care including (childbirth) regionalization and prenatal/postpartum access	**Women/Maternal Access to Quality Care & Services: Strategy 2:** Increase the proportion of facilities that evaluate the quality of their care using both patient experience and clinical measures	**Women/Maternal Access to 3:** Increase maternal mortality/m *California Pregnancy Associ* recommendations and engag
Local Activities for Women/Maternal Objective: Strategy 1	**Local Activities for Women/Maternal Objective: Strategy 2**	**Local Activities for Women**
w 1.1.1 ☐ Suggested local activity (Optional): Partner with RPPC and CDPH/MCAH to identify and share local funding barriers and care delivery policies that impede regionalization and perinatal access to care. **What is your anticipated outcome?**	**w 1.2.1** ☐ Suggested local activity (Optional): Promote policies, procedures, and practices that align with those recommended by Black Birth Equity experts to help perinatal facilities and clinics to combat anti-Black racism and mitigate biased treatment of people with historically marginalized identities. **What is your anticipated outcome?**	**w 1.3.1** ☐ Suggested local activity (Use the CDPH/MCAH CA-P recommendations to inform p reduce pregnancy related mo **What is your anticipated ou**

w 1.1.2 ☐ Other local activity (Please Specify/Optional): **What is your anticipated outcome?**	**w 1.2.2** ☐ Other local activity (Please Specify/Optional): **What is your anticipated outcome?**	**w 1.3.2** ☐ Other local activity (Pleas **What is your anticipated ou**

Women/Maternal Focus Area 2: Mental Health & Substance Use	
Women/Maternal Mental Health & Substance Use: Strategy 1: Implement policy, systems, and environmental change (PSE) activities to improve mental/behavioral health, including in the postpartum period	**Women/Maternal Mental Health & Substance Use: Strateg** Improve primary prevention, early intervention and social suppo improve mental/behavioral health
Local Activities for Women/Maternal Objective: Strategy 1	**Local Activities for Women/Maternal Objective: Strategy 2**
w 2.1.1 ☐ Suggested local activity (Optional): Develop and implement PSE approaches to improve mental/behavioral health during pregnancy or postpartum. **What is your anticipated outcome?**	**w 2.2.1** ☐ Suggested local activity (Optional): Implement postpartum mental health screenings for birthing par **What is your anticipated outcome?**

FINAL

w 2.1.2 ☐ Suggested local activity (Optional): Develop "Success Story" on PSE strategy/intervention used for mental wellness. **What is your anticipated outcome?**	**w 2.2.2** ☐ Suggested local activity (Optional): Develop "Success Story" on primary prevention used for mental **What is your anticipated outcome?**
w 2.1.3 ☒ Other local activity (Optional): Partner with local organizations to disseminate mental health promotional messages that educate women and families to recognize early signs and symptoms of mental health disorders. **What is your anticipated outcome?** Increased awareness and understanding of maternal mental health, including postpartum anxiety and depression, among women, families, and support networks in Colusa County. Reducing stigma through education will promote earlier identification and increased utilization of mental health resources before, during, and after pregnancy.	**w 2.2.3** ☐ Suggested local activity (Please Specify/Optional): Participate in CDPH/MCAH FLOURISH Training, Individualiz **What is your anticipated outcome?**

Women/Maternal Focus Area 3: Social Determinants & Family Supports	
Women/Maternal Social Determinants & Family Supports: Strategy 1: Promote culturally appropriate care and expand perinatal care teams (e.g., doulas, midwives) to include culturally congruent staff, including during the postpartum period	**Women/Maternal Social Determinants & Family Supports:** Partner to improve neighborhood conditions, quality education, supports
Local Activities for Women/Maternal Objective: Strategy 1:	**Local Activities for Women/Maternal Objective: Strategy 2:**
w 3.1.1 ☐ Suggested local activity (Optional): Provide education to birthing persons and their families about how to access quality care and care options.	**w 3.2.1** ☐ Suggested local activity (Optional):

What is your anticipated outcome?	Collaborate with strategic partners to identify best practices for social determinants of health (e.g., neighborhood conditions, qu opportunities and social supports); share best practices with CD **What is your anticipated outcome?**
w 3.1.2 ☐ Suggested local activity (Optional): Partner to develop culturally and linguistically appropriate trainings and consumer education materials and supporting tools that promote breastfeeding or birth options for specific local populations (e.g. Mixteca). **What is your anticipated outcome?**	**w 3.2.2** ☐ **What is your anticipated outcome?**
w 3.1.3 ☐ Other local activity (Please Specify/Optional): **What is your anticipated outcome?**	

Women/Maternal Focus Area 4: Physical Health & Prevention	
Women/Maternal Physical Health & Prevention: Strategy 1: Promote Policy, Systems, and Environmental (PSE) strategies for leading causes of morbidity before, during and after pregnancy	**Women/Maternal Physical Health & Prevention: Strategy 2** Partner on maternal anemia prevention across the perinatal peric
Local Activities for Women/Maternal Objective: Strategy 1:	**Local Activities for Women/Maternal Objective: Strategy 2:**
w 4.1.1 ☐ Suggested local activity (Optional):	**w 4.2.1** ☐ Other local activity (Please Specify/Optional):

Identify and implement PSE strategies that address leading causes of morbidity, including cardiovascular disease and gestational diabetes (GDM), before, during, and after pregnancy. **What is your anticipated outcome?**	**What is your anticipated outcome?**
w 4.1.2 ☐ Suggested local activity (Optional): Participate in a CDPH/MCAH cohort project (to receive training, technical assistance and evaluation support) on PSE strategies focused on GDM. **What is your anticipated outcome?**	**w 4.2.2** ☐ Other local activity (Please Specify/Optional): **What is your anticipated outcome?**
w 4.1.3 ☐ Other local activity (Please Specify/Optional): **What is your anticipated outcome?**	

FINAL

Section C: Local Activities by Domain

At least one activity must be selected or the LHJ must develop at least one activity of their own in the Perinatal/Infant Health

Perinatal/Infant Health Domain

Perinatal/Infant Priority Need: *Advance Black birth equity and support birthing people and families to have thriving infants.*

Performance Measures (National/State Performance Measures)	**NPM:** Percent of women with a recent live birth who experienced racial/ethnic discrimination while getting healthcare d postpartum care.

Perinatal/Infant State Objective:
By 2030, reduce the rate of Black infant deaths from 8.81 per 1,000 live births (2023 CCMBF/CCMDF) to 8.37.

Perinatal/Infant Focus Area 1: Access to Quality Care & Services

Perinatal/Infant Access to Quality Care & Services: Strategy 1:
Translate Fetal Infant Mortality Review (FIMR) learnings and recommendations into action, including recommendations on the care experience.

Local Activities for Perinatal/Infant Objective: Strategy 1

p 1.1.1

☐ Suggested local activity (Optional):
Participate in collecting infant mortality FIMR data using the National Fatal Review-Case Reporting System.

What is your anticipated outcome?

p 1.1.2

☐ Suggested local activity (Optional):
Conduct and collect interview of families experiencing a stillbirth or infant loss.

What is your anticipated outcome?

p 1.1.3

☐ Suggested local activity (Optional):
Develop "Success Story" on prevention efforts based on FIMR recommendations.

What is your anticipated outcome?

p 1.1.4

☒ Other local activity (Please Specify/Optional):
Develop a bilingual (Spanish and English) informative handout on safe sleep practices aimed at reducing the risk of Sudden Infant Death Syndrome (SIDS) and related fa

What is your anticipated outcome?
Developing a bilingual handout on safe sleep practices will help translate FIMR recommendations by addressing one of the most common and preventable causes of infan
both English and Spanish ensures that families from diverse backgrounds have equitable access to vital, culturally and linguistically appropriate education. This resource
experience by empowering caregivers with clear, evidence-based guidance on safe sleep, ultimately supporting safer home environments and reducing disparities in infan

Perinatal/Infant Focus Area 3: Social Determinants & Family Supports	
Perinatal/Infant Social Determinants & Family Supports: Strategy 1: Partner to increase economic and social supports (e.g., transportation, childcare, parenting resources) to families.	**Perinatal/Infant Social Determinants & Family Supports: St** Promote culturally-responsive grief and bereavement and suppo
Local Activities for Perinatal/Infant Objective: Strategy 1	**Local Activities for Perinatal/Infant Objective: Strategy 2**
p 3.1.1 ☐ Suggested local activity (Optional): Identify opportunities to involve and integrate fathers into MCAH programs.	**p 3.2.1** ☐ Suggested local activity (Optional): Partner with CDPH/MCAH to develop and disseminate resource infant or maternal loss (e.g. death certificates, adding unmarried

What is your anticipated outcome?	**What is your anticipated outcome?**
p 3.1.2 ☐ Suggested local activity (Optional): Partner with CDPH/MCAH to identify best practice strategies for MCAH programs to provide families with economic and social supports. **What is your anticipated outcome?**	**p 3.2.2** ☐ Other local activity (Please Specify/Optional): **What is your anticipated outcome?**
p 3.1.3 ☐ Other local activity (Please Specify/Optional): **What is your anticipated outcome?**	

FINAL

Perinatal Focus Area 4: Physical Health & Prevention	
Perinatal/Infant Physical Health & Prevention: Strategy 1: Partner on maternal anemia prevention through policy, systems and environmental change (PSE) strategies to improve perinatal and infant outcomes	**Perinatal/Infant Physical Health & Prevention: Strategy 2:** Promote breastfeeding initiation and duration through PSE and v considerations of the care experience
Local Activities for Perinatal/Infant Objective: Strategy 1	**Local Activities for Perinatal/Infant Objective: Strategy 2**
p 4.1.1 ☐ Other local activity (Please Specify/Optional): **What is your anticipated outcome?**	**p 4.2.1** ☐ Suggested local activity (Optional): Promote training, tools, policies and best practices, including wo breastfeeding initiation and duration to families who choose to b **What is your anticipated outcome?**
	p 4.2.2 ☐ Suggested local activity (Optional): Identify resources and training opportunities for organizations, h families who choose to breastfeed. **What is your anticipated outcome?**
	p 4.2.3 ☐ Suggested local activity (Optional): Develop "Success Story" on PSE strategy/intervention used for **What is your anticipated outcome?**

FINAL

	p 4.2.4 ☐ Other local activity (Please Specify/Optional): Establish and provide a mobile Lactation Lounge at comm comfortable, private space for breastfeeding, while promoting br **What is your anticipated outcome?** Fosters a supportive community environment that promot support networks for mothers, and contributes to healthier neigh
	p.4.2.5 ☐ Other local activity (Please Specify/Optional): Provide breastfeeding education and support to new and distribution of breastfeeding supplies and educational materials practices. **What is your anticipated outcome?** Distributing breastfeeding supplies alongside culturally s postpartum families receive the practical resources and support t importance of culturally congruent care in addressing the unique

Perinatal/Infant Focus Area 5: Injury Prevention & Safe Environments
Perinatal/Infant Injury Prevention & Safe Environments: Strategy 1: Identify new partnerships to improve SIDS/SUID prevention
Local Activities for Perinatal/Infant Objective: Strategy 1
p 5.1.1 ☐ Suggested local activity (Optional): Develop population-specific recommendations for safe sleep practices based on FIMR data. **What is your anticipated outcome?**

p 5.1.2

☐ Suggested local activity (Optional):
Partner with local institutional organizations such as Nursing schools, Residency Programs, and other medical professions groups on Safe Sleep Education.

What is your anticipated outcome?

p 5.1.3

☒ Other local activity (Please Specify/Optional):
Partner with local organizations to promote and disseminate information and resources related to SIDS/SUID risk factors and reduction strategies.

What is your anticipated outcome?
Implementation of the Safe to Sleep campaign, including targeted social media messaging and the distribution of Pack 'N Plays to low-income families, will raise awaren
reduce SIDS/SUID risk factors in the community.

FINAL

Section C: Local Activities by Domain

At least one activity must be selected or the LHJ must develop at least one activity of their own in the Child Health Domain

Child Health Domain

Child Priority Need: *Improve the physical and mental health and development of all children so they flourish and thrive.*

Performance Measures (National/State Performance Measures)	**NPM:** Medical Home - Overall*: Percent of children with and without special health care needs, ages 0 through 17, who have a medical home

Child State Objective: NSCH 4.12 Medical Home
By 2030, increase the percent of children in CA who have received care within a medical home from 39.3% (NSCH 2022-2023) to 41%.

Child Focus Area 1: Access to Quality Care & Services

Child Access to Quality Care & Services: Strategy 1: Promote the pediatric medical home through school-linked and school-based health prevention, education and services.	**Child Access to Quality Care & Services: Strategy 2:** Promote linkage and referrals to care and support services, espec determinants of health
Local Activities for Child Objective: Strategy 1	**Local Activities for Child Objective: Strategy 2**
ch 1.1.1 ☐ Suggested local activity (Optional): Partner with local provider groups, MCPs and organizations to increase understanding, build capacity, and promote the seven American Academy of Pediatrics components of a medical home. **What is your anticipated outcome?**	**ch 1.2.1** ☐ Suggested local activity (Optional): Work with state and local partners to promote and disseminate i supports and economic family supports, especially those that tar housing, childcare, and nutrition. **What is your anticipated outcome?**
ch 1.1.2 ☐ Other local activity (Please Specify/Optional):	**ch 1.2.2** ☐ Other local activity (Please Specify/Optional):

What is your anticipated outcome?	What is your anticipated outcome?

Child Focus Area 2: Mental Health & Substance Use	
Child Mental Health & Substance Use: Strategy 1: Promote social connectedness	**Child Mental Health & Substance Use: Strategy 2:** Collaborate to improve education and awareness of, and access t
Local Activities for Child Objective: Strategy 1	**Local Activities for Child Objective: Strategy 2**
ch 2.1.1 ☐ Suggested local activity (Optional): Identify and lead/participate in a policy, systems and environmental change (PSE) activity or primary prevention activity, in collaboration with local early childhood, parenting groups, and/or community-based organizations, centering social connectedness for children and their families, promoting positive parent-child relationships, connection, family wellness and resilience, and uplifting Positive Childhood Experiences and create a success story to share. **What is your anticipated outcome?**	**ch 2.2.1** ☐ Suggested local activity (Optional): Connect with local education agencies to assist with/establish re Youth Behavioral Health Initiative School-Linked Multi-payer F behavioral health services. **What is your anticipated outcome?**
ch 2.1.2 ☒ Suggested local activity (Optional): Partner with community organizations to promote free play for children, access to green spaces, and safe/accessible community gathering places. **What is your anticipated outcome?**	**ch 2.2.2** ☐ Suggested local activity (Optional): Increase LHJ capacity and understanding of trauma-responsive/ prevention of mental and behavioral health for children and fam **What is your anticipated outcome?**

Collaboration with local partners, including the Colusa Home Visiting Program, First 5 Colusa, and Family Action Centers, will promote increased opportunities for physical activity and social interaction, thereby strengthening family engagement and community connectedness.	
ch 2.1.3 ☐ Other local activity (Please Specify/Optional): **What is your anticipated outcome?**	**ch 2.2.3** ☐ Other local activity (Please Specify/Optional): **What is your anticipated outcome?**

Child Focus Area 4: Physical Health & Prevention			
Child Physical Health & Prevention: Strategy 1: Increase child preventive health rates	**Child Physical Health & Prevention: Strategy 2:** Promote early childhood prevention, screening and intervention	**Child Physical Health & Prevention: Strategy 3:** Optimize nutrition and physical activity for children	**Child Phys 4:** Identify and disparities
Local Activities for Child Objective: Strategy 1	**Local Activities for Child Objective: Strategy 2**	**Local Activities for Child Objective: Strategy 3**	**Local Acti Strategy 4**
ch 4.1.1 ☐ Suggested local activity (Optional): Lead and/or partner to participate in local activities promoting pediatric preventive health visits, screening, assessments and routine pediatric vaccinations, especially activities that are school-linked/school based and/or community-based. **What is your anticipated outcome?**	**ch 4.2.1** ☐ Suggested local activity (Optional): Partner with local First 5, Help Me Grow, home visiting and other early intervention programs to increase access to and promote universal infant and child developmental screening based on AAP Bright Futures guidelines and closed-loop early intervention referrals. **What is your anticipated outcome?**	**ch 4.3.1** ☐ Suggested local activity (Optional): Partner with schools, local WIC agencies, Early Childcare Education programs, and other organizations (such as SunBucks and The Governor's Council on Physical Fitness) to improve food security and promote healthy nutrition and physical activity choices for children and families, including the Child MyPlate nutrition guidelines. **What is your anticipated outcome?**	**ch 4.4.1** ☐ Other lo **What is yo**

FINAL

ch 4.1.2 ☒ Suggested local activity (Optional): Partner with local oral health programs, CDPH Office of Oral Health, and CDPH Office of School Health to promote children's oral health screening, preventive visits and closed-loop referrals, especially those that are school-linked/school-based. **What is your anticipated outcome?** Increased awareness of the importance of preventive dental care through the distribution of oral health education and hygiene kits will lead to improved oral health practices and increased utilization of preventive dental services among children.	**ch 4.2.2** ☐ Other local activity (Please Specify/Optional): **What is your anticipated outcome?**	**ch 4.3.2** ☐ Other local activity (Please Specify/Optional): **What is your anticipated outcome?**	
ch 4.1.3 ☐ Other local activity (Please Specify/Optional): **What is your anticipated outcome?**			

Child Focus Area 5: Injury Prevention & Safe Environments	
Child Injury Prevention & Safe Environments: Strategy 1: Promote safe environments and communities and prevent unintentional injury for children and families	**Child Injury Prevention & Safe Environments: Strategy 2:** Uplift prevention efforts to reduce child abuse and neglect
Local Activities for Child Objective: Strategy 1	**Local Activities for Child Objective: Strategy 2**

FINAL

ch 5.1.1 ☐ Suggested local activity (Optional): Create/participate in and disseminate a child injury prevention campaign locally, targeting child passenger safety, infant/toddler car seat safety, teen driving safety, bike helmet use, water safety, or other areas of child injury prevention important to the local MCAH population. **What is your anticipated outcome?**	**ch 5.2.1** ☐ Suggested local activity (Optional): Partner with local All Children Thrive project and network(s) to create changes within systems and structures to reduce ACEs, ch positive childhood experiences. **What is your anticipated outcome?**
ch 5.1.2 ☒ Other local activity (Please Specify/Optional): Collaborate with First 5 Colusa, Family Action Centers, and Colusa Home Visiting Program to provide child passenger safety education and distribute safety equipment to children at high risk for passenger injury. **What is your anticipated outcome?** Families will receive child passenger safety education and hands-on technical assistance. Proper installation of car seats and booster seats at events or appointments will reduce the risk of injury in the event of a motor vehicle accident.	**ch 5.2.2** ☐ Suggested local activity (Optional): Partner with local child welfare efforts to develop County Comp determine local primary, secondary, and tertiary prevention strat children and youth engaging with the child welfare system. **What is your anticipated outcome?**
	ch 5.2.3 ☐ Other local activity (Please Specify/Optional): **What is your anticipated outcome?**

FINAL

Section C: Local Activities by Domain

At least one activity must be selected or the LHJ must develop at least one activity of their own in the CYSHCN Health Doma

Children and Youth with Special Health Care Needs (CYSHCN) Domain	
CYSHCN Priority Need: *Improve access to supports and services.*	
Performance Measures (National/State Performance Measures)	**NPM: Medical Home - Care Coordination:** Percent of children with and without special health care needs, ages 0 through 17, who receive needed care coordinatio **NPM: Transition:** Percent of adolescents with and without special health care needs, ages 12 through 17, who received services to prepare
CYSHCN State Objective 1: By 2030, increase the percentage of children with special health care needs, ages 0 through 17, who receive needed care coordination from 47.7% (NSCH 2021-2023) to **CYSHCN State Objective 2:** By 2030, increase the percentage of adolescents with special health care needs, ages 12 through 17, who received services to prepare for the transition to adult health care 18%.	

CYSHCN Focus Area 1: Access to Quality Care & Services	
CYSHCN Access to Quality Care & Services Objective 1: Strategy 1: Partner to improve access to quality, coordinated care and support services for CYSHCN and their families.	**CYSHCN Access to Quality Care & Services Objective 1: St** Fund the Department of Health Care Services (DHCS) to provid case management for California Children's Services (CCS) prog assist CYSHCN families in navigating services.
Local Activities for CYSHCN Objective 1: Strategy 1:	**Local Activities for CYSHCN Objective 1: Strategy 2:**
cy 1.1.1 ☐ Suggested local activity (Optional): Partner with your county CCS program AND/OR an organization that provides care coordination for CYSHCN and their families (i.e. community-based organizations, home visiting (CHVP), schools/universities, Regional Centers, other state/local governmental agencies/departments) to improve care coordination and communication between provider types for CYSHCN. **What is your anticipated outcome?**	**cy 1.2.1** ☐ Other local activity (Please Specify/Optional): **What is your anticipated outcome?**

cy 1.1.2 ☒ Suggested local activity (Optional): Create/join a local learning collaborative or workgroup focused on the transition to adult health care and supports and services for youth with special health care needs. **What is your anticipated outcome?** Participation in a collaborative workgroup will enhance MCAH's understanding of the challenges faced by CYSHCN and improve coordination of services through strengthened partnerships with community agencies.	
cy 1.1.3 ☒ Other local activity (Please Specify/Optional): Create or update a comprehensive resource guide or service map to help families, providers, and organizations navigate local services available to CYSHCN. **What is your anticipated outcome?** The resource guide will serve as a tool for Colusa's MCAH and Home Visiting Programs, as well as providers and community organizations, to educate families of CYSHCN about available services. Increased accessibility to this information will empower families to seek and receive appropriate support.	

CYSHCN Focus Area 2: Mental Health & Substance Use	
CYSHCN Mental Health & Substance Use State Objective 2: Strategy 1: Partner to develop programs and resources to enhance resilience and mental wellness support for CYSHCN and their families.	**CYSHCN Mental Health & Substance Use State Objective 2** Support local health jurisdictions (LHJs) to build workforce cap families.
Local Activities for CYSHCN Objective 2: Strategy 1:	**Local Activities for CYSHCN Objective 2: Strategy 2:**

cy 2.1.1 ☐ Suggested local activity (Optional): Implement a project focused on mental health for parents/caregivers of CYSHCN (examples: connecting families in the NICU to home visiting, provider outreach to integrate parental mental health screening into pediatric visits, partner with family-serving organization(s) and/or community members to develop a CYSHCN-focused/awareness building social media campaign, training program, or peer support network). **What is your anticipated outcome?**	**cy 2.2.1** ☐ Suggested local activity (Optional): Participate in a workgroup or training covering primary preventi Environmental change (PSE) strategies/interventions to enhance CYSHCN families and develop a success story to share out best Directors. **What is your anticipated outcome?**
cy 2.1.2 ☐ Other local activity (Please Specify/Optional): **What is your anticipated outcome?**	**cy 2.2.2** ☐ Other local activity (Please Specify/Optional): **What is your anticipated outcome?**

CYSHCN Focus Area 3: Social Determinants & Family Supports	
CYSHCN Social Determinants & Family Supports Objective 2: Strategy 1: Partner with diverse organizations to build workforce capacity to serve CYSHCN and their families.	**CYSHCN Social Determinants & Family Supports Objective** Lead development of informational platforms and tools for CYS
Local Activities for CYSHCN Objective 2: Strategy 1:	**Local Activities for CYSHCN Objective 2: Strategy 2:**
cy 3.1.1 ☐ Suggested local activity (Optional): Implement a project focused on social and community inclusion for CYSHCN and their families (examples: partner with Parks and Recreation departments to make public spaces and events more inclusive; partner with community organizations or government agencies to improve emergency preparedness and disaster relief support for CYSHCN and their families).	**cy 3.2.1** ☐ Other local activity (Please Specify/Optional): **What is your anticipated outcome?**

What is your anticipated outcome?	
cy 3.1.2 ☐ Suggested local activity (Optional): Partner with youth-facing programs and organizations (examples: youth community groups, service clubs, and youth serving non-profits) to include CYSHCN populations, considerations, and voices in programming, resource development, and event planning. **What is your anticipated outcome?**	
cy 3.1.3 ☐ Other local activity (Please Specify/Optional): **What is your anticipated outcome?**	

FINAL

Section C: Local Activities by Domain

At least one activity must be selected or the LHJ must develop at least one activity of their own in the Adolescent Health Dom

Adolescent Domain	
Adolescent Priority Need: *Enhance strengths, skills, and access to equitable supports, ensuring all youth thrive.*	
Performance Measures (National/State Performance Measures)	**NPM: Adolescent Well-Visit:** Percent of adolescents, ages 12 through 17, with a preventive medical visit in the past year
Adolescent State Objective: By 2030, increase the percentage of adolescents, ages 12 through 17, with a preventive medical visit in the past year from 62.9% to 66%.	

Adolescent Focus Area 1: Access to Quality Care & Services	
Adolescent Access to Quality Care & Services: Strategy 1: Improve awareness of and access to quality youth-friendly care	**Adolescent Access to Quality Care & Services: Strategy 2:** Support youth in valuing and prioritizing preventive care
Local Activities for Adolescent Objective: Strategy 1:	**Local Activities for Adolescent Objective: Strategy 2:**
a 1.1.1 ☐ Suggested local activity (Optional): Promote and/or collaborate with school-linked/school-based services and school-based health centers to increase youth linkage to and engagement in health services. **What is your anticipated outcome?**	**a 1.2.1** ☐ Suggested local activity (Optional): Disseminate information to youth and youth-serving partners ab care visit and the benefits of attending recommended preventive encouraged in this work). **What is your anticipated outcome?**
a 1.1.2 ☐ Suggested local activity (Optional)	**a 1.2.2** ☐ Other local activity (Please Specify/Optional):

Disseminate information to youth and youth-serving partners about insurance coverage, minor consent, and confidentiality for primary and behavioral health care services. **What is your anticipated outcome?**	**What is your anticipated outcome?**
a 1.1.2 ☐ Other local activity (Please Specify/Optional): **What is your anticipated outcome?**	

Adolescent Focus Area 2: Mental Health & Substance Use	
Adolescent Mental Health & Substance Use: Strategy 1: Promote primary prevention and early intervention best practices for behavioral health	**Adolescent Mental Health & Substance Use: Strategy 2:** Enhance resilience and coping skills
Local Activities for Adolescent Objective: Strategy 1:	**Local Activities for Adolescent Objective: Strategy 2:**
a 2.1.1 ☐ Suggested local activity (Optional): Partner to disseminate training opportunities and resources for youth and those that work with youth related to adolescent mental health and well-being, substance use disorder education/prevention/intervention, and harm-reduction strategies. **What is your anticipated outcome?**	**a 2.2.1** ☐ Suggested local activity (Optional): Promote resources and supports for youth around healthy relatio peer, romantic and sexual partners). **What is your anticipated outcome?**
a 2.1.2 ☐ Other local activity (Please Specify/Optional):	**a 2.2.2** ☐ Other local activity (Please Specify/Optional):

FINAL

What is your anticipated outcome?	**What is your anticipated outcome?**

Adolescent Focus Area 4: Physical Health & Prevention	
Adolescent Physical Health & Prevention: Strategy 1: Promote youth-friendly sexual and reproductive health services, information, and education	**Adolescent Physical Health & Prevention: Strategy 2:** Enhance skills for independent living and transition to adulthood
Local Activities for Adolescent Objective: Strategy 1:	**Local Activities for Adolescent Objective: Strategy 2:**
a 4.1.1 ☒ Suggested local activity (Optional): Promote medically accurate adolescent sexual and reproductive health practices by disseminating information, resources, and training opportunities to local youth-serving agencies and organizations. **What is your anticipated outcome?** Increased knowledge among adolescents and their families about safe sex practices and reproductive health through a coordinated social media campaign and resource dissemination, leading to improved sexual health outcomes and informed decision-making.	**a 4.2.1** ☐ Suggested local activity (Optional): Partner with CDPH/MCAH to utilize evidence-based and/or evi (such as the AFLP Positive Youth Development (PYD) approac frameworks) to enhance autonomy and increase opportunities to educational outcomes as youth transition to adulthood. **What is your anticipated outcome?**
a 4.1.2 ☐ Other local activity (Please Specify/Optional): **What is your anticipated outcome?**	**a 4.2.2** ☐ Other local activity (Please Specify/Optional): **What is your anticipated outcome?**

FINAL

California Department Of Public Health
Maternal, Child And Adolescent Health (MCAH) Division

Funding Agreement Period
FY 2025-2026

Agency Information Form

Agencies are required to submit an electronic and signed copy (original signatures only) of this form along with their Annual AFA Package.

Agencies are required to submit updated information when updates occur during the fiscal year. Updated submissions do not require certification signatures.

Agency Identification Information

Any program related information being sent from the CDPH MCAH Division will be directed to all Program Directors.

Please enter the agreement or contract number for each of the applicable programs

MCAH 202506 BIH _____ AFLP _____ PEI _____

Update Effective Date *(only required when submitting updates)* _____

Federal Employer ID#: 94-6000508

Complete Official Agency Name: Colusa County Health and Human Services

Business Office Address: 251 E. Webster St., Colusa CA 95932

Agency Phone: 530-458-0380

Agency Fax: 530-458-4136

Agency Website: http://www.countyofcolusa.org/26/Health-Human Services

Agency Remittance Address: 251 E. Webster st., Colusa CA 95932-2951

Agreement Funding Application
Policy Compliance And Certification

Please enter the **agreement or contract** number for each of the applicable programs

MCAH 202506 BIH _____ AFLP _____ PEI _____

The undersigned hereby affirms that the statements contained in the Agreement Funding Application (AFA) are true and complete to the best of the applicant's knowledge.

I certify that these Maternal, Child and Adolescent Health (MCAH) programs will comply with all applicable provisions of Article 1, Chapter 1, Part 2, Division 106 of the Health, and Safety code (commencing with section 123225), Chapters 7 and 8 of the Welfare and Institutions Code (commencing with Sections 14000 and 142), and any applicable rules or regulations promulgated by CDPH pursuant to this article and these Chapters. I further certify that all MCAH related programs will comply with the most current MCAH Policies and Procedures Manual, including but not limited to, Administration, Federal Financial Participation (FFP) Section. I further certify that the MCAH related programs will comply with all federal laws and regulations governing and regulating recipients of funds granted to states for medical assistance pursuant to Title XIX of the Social Security Act (42 U.S.C. section 1396 et seq.) and recipients of funds allotted to states for the Maternal and Child Health Service Block Grant pursuant to Title V of the Social Security Act (42 U.S.C. section 701 et seq.). I further agree that the MCAH related programs may be subject to all sanctions, or other remedies applicable, if the MCAH related programs violate any of the above laws, regulations, and policies with which it has certified it will comply.

Official authorized to commit the Agency to an MCAH Agreement

Name (Print): Abigale Henderson

Title: Deputy Director

Original Signature: 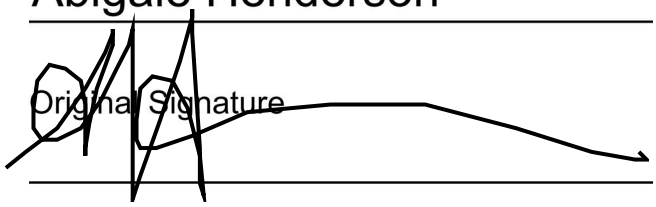

Date: 10/29/25

MCAH/AFLP Director

Name (Print): Abigale Henderson

Title: Deputy Director

Original Signature: 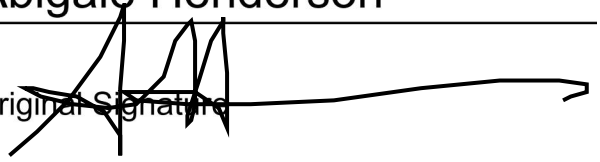

Date: 10/29/25

MCAH Program

#	Contact	First Name	Last Name	Title	Address	Phone	Email Address	Program
1	AGENCY EXECUTIVE DIRECTOR	Elizabeth	Kelly	Director	251 E. Webster St., Colusa CA 95932	530-458-0205	Elizabeth.Kelly@countyofcolusaca.gov	MCAH
2	MCAH DIRECTOR	Stephanie	Rosas	Health Program Specialist III	251 E. Webster St., Colusa CA 95932	530-458-0382	stephanie.rosas@countyofcolusaca.gov	MCAH
3	MCAH COORDINATOR (Only complete if different from #2)							MCAH
4	MCAH FISCAL CONTACT	Amy	Abney	Budget Specialist	251 E. Webster St., Colusa CA 95932	530-458-0294	amy.abney@countyofcolusaca.gov	MCAH
5	FISCAL OFFICER	Christine	Fusaro	Fiscal Officer	251 E. Webster St., Colusa CA 95932	530-458-0870	christine.fusaro@countyofcolusaca.gov	MCAH
6	CLERK OF THE BOARD or	Marcos	Kropf	Clerk of Board	250 Fifth St., Colusa CA 95932	530-458-0737	mkropf@countyofcolusaca.gov	MCAH
7	CHAIR BOARD OF SUPERVISORS	Daurice	Smith	Chair Board of Supervisors	250 Fifth St., Colusa CA 95932	530-458-0508	boardclerk@countyofcolusaca.gov	MCAH
8	OFFICIAL AUTHORIZED TO COMMIT AGENCY	Daurice	Smith	Chair Board of Supervisors	250 Fifth St., Colusa CA 95932	530-458-0508	boardclerk@countyofcolusaca.gov	MCAH
9	SUDDEN INFANT DEATH SYNDROME (SIDS) COORDINATOR/CONTACT	Stephanie	Rosas	Health Program Specialist III	251 E. Webster St., Colusa CA 95932	530-458-0382	stephanie.rosas@countyofcolusaca.gov	SIDS
10	PERINATAL SERVICES COORDINATOR	Stephanie	Rosas	Health Program Specialist III	251 E. Webster St., Colusa CA 95932	530-458-0382	stephanie.rosas@countyofcolusaca.gov	CPSP

BIH Program

#	Contact	First Name	Last Name	Title	Address	Phone	Email Address	Program
1	AGENCY EXECUTIVE DIRECTOR							BIH
2	BLACK INFANT HEALTH (BIH) COORDINATOR							BIH
3	BIH FISCAL CONTACT							BIH
4	FISCAL OFFICER							BIH
5	CLERK OF THE BOARD or							BIH
6	CHAIR BOARD OF SUPERVISORS							BIH
7	OFFICIAL AUTHORIZED TO COMMIT AGENCY							BIH

PEI Program

#	Contact	First Name	Last Name	Title	Address	Phone	Email Address	Program
1	AGENCY EXECUTIVE DIRECTOR							PEI
2	PERINATAL EQUITY INITIATIVE (PEI) COORDINATOR							PEI
3	PEI FISCAL CONTACT							PEI
4	FISCAL OFFICER							PEI
5	CLERK OF THE BOARD or							PEI
6	CHAIR BOARD OF SUPERVISORS							PEI
7	OFFICIAL AUTHORIZED TO COMMIT AGENCY							PEI

AFLP Program

#	Contact	First Name	Last Name	Title	Address	Phone	Email Address	Program
1	AGENCY EXECUTIVE DIRECTOR							AFLP
2	AFLP DIRECTOR							AFLP
3	AFLP COORDINATOR or SUPERVISOR/COORDINATOR							AFLP
4	AFLP FISCAL CONTACT							AFLP
5	FISCAL OFFICER							AFLP
6	CLERK OF THE BOARD or							AFLP
7	CHAIR BOARD OF SUPERVISORS							AFLP
8	OFFICIAL AUTHORIZED TO COMMIT AGENCY							AFLP

California Department of Public Health CDPH Maternal, Child and Adolescent Health Division

BUDGET SUMMARY

FISCAL YEAR	BUDGET	BUDGET STATUS	BUDGET BALANCE
2025-26	ORIGINAL	ACTIVE	0.00

Version 7.0 - 150 Quarterly 4.1.25

Program:	Maternal, Child and Adolescent Health (MCAH)
Agency:	202506 Colusa
SubK:	

		UNMATCHED FUNDING						NON-ENHANCED MATCHING (50/50)				ENHANCED MATCHING (75/25)			
		MCAH-TV		MCAH-SIDS		AGENCY FUNDS				MCAH-Cnty NE				MCAH-Cnty E	
	(1)	(2)	(3)	(4)	(5)	(6)	(7)	(8)	(9)	(10)	(11)	(12)	(13)	(14)	(15)
	TOTAL FUNDING	%	MCAH-TV	%	MCAH-SIDS	%	Agency Funds*	%	Combined Fed/State	%	Combined Fed/Agency*	%	Combined Fed/State	%	Combined Fed/Agency*
ALLOCATION(S) →			77,015.00		3,000.00										#VALUE!

EXPENSE CATEGORY															
(I) PERSONNEL	98,073.60		53,116.95		3,000.00		541.20		0.00		40,152.00		0.00		1,263.46
(II) OPERATING EXPENSES	7,300.00		5,423.88		0.00		0.00		0.00		1,876.12		0.00		0.00
(III) CAPITAL EXPENDITURES	0.00		0.00		0.00		0.00		0.00		0.00		0.00		0.00
(IV) OTHER COSTS	4,309.89		4,309.89		0.00		0.00		0.00		0.00		0.00		0.00
(V) INDIRECT COSTS	24,518.40		14,164.28		0.00		0.00		0.00		10,354.12		0.00		0.00
BUDGET TOTALS*	134,201.89	57.39%	77,015.00	2.24%	3,000.00	0.40%	541.20	0.00%	0.00	39.03%	52,382.24	0.00%	0.00	0.94%	1,263.46
BALANCE(S) →			0.00		0.00										

TOTAL MCAH-TV	77,015.00	→	77,015.00												
TOTAL MCAH-SIDS	3,000.00	→			3,000.00										
TOTAL OAH	0.00	→													
TOTAL TITLE XIX	27,138.72	→							0.00	[50%]	26,191.12		0.00	[75%]	947.60
TOTAL AGENCY FUNDS	27,048.18	→					541.20			[50%]	26,191.12			[25%]	315.86

$ 107,153.72	Maximum Amount Payable from State and Federal resources

WE CERTIFY THAT THIS BUDGET HAS BEEN CONSTRUCTED IN COMPLIANCE WITH ALL MCAH ADMINISTRATIVE AND PROGRAM POLICIES.

MCAH/PROJECT DIRECTOR'S SIGNATURE DATE

AGENCY FISCAL AGENT'S SIGNATURE DATE

* These amounts contain local revenue submitted for information and matching purposes. MCAH does not reimburse Agency contributions.

STATE USE ONLY - TOTAL STATE AND FEDERAL REIMBURSEMENT	MCAH-TV		MCAH-SIDS		AGENCY FUNDS				MCAH-Cnty NE				MCAH-Cnty E
PCA Codes	53107		53112						53118				53117
(I) PERSONNEL	53,116.95		3,000.00				0.00		20,076.00		0.00		947.60
(II) OPERATING EXPENSES	5,423.88		0.00				0.00		938.06		0.00		0.00
(III) CAPITAL EXPENSES	0.00		0.00				0.00		0.00		0.00		0.00

California Department of Public Health CDPH Maternal, Child and Adolescent Health Division

Program:	Maternal, Child and Adolescent Health (MCAH)	UNMATCHED FUNDING						NON-ENHANCED MATCHING (50/50)				ENHANCED MATCHING (75/25)			
Agency:	202506 Colusa														
SubK:		MCAH-TV		MCAH-SIDS		AGENCY FUNDS				MCAH-Cnty NE				MCAH-Cnty E	
	(1)	(2)	(3)	(4)	(5)	(6)	(7)	(8)	(9)	(10)	(11)	(12)	(13)	(14)	(15)
	TOTAL FUNDING	%	MCAH-TV	%	MCAH-SIDS	%	Agency Funds*	%	Combined Fed/State	%	Combined Fed/Agency*	%	Combined Fed/State	%	Combined Fed/Agency*
(IV) OTHER COSTS			4,309.89		0.00				0.00		0.00		0.00		0.00
(V) INDIRECT COSTS			14,164.28		0.00				0.00		5,177.06		0.00		0.00
Totals for PCA Codes	107,153.72		77,015.00		3,000.00				0.00		26,191.12		0.00		947.60

Program:	Maternal, Child and Adolescent Health (MCAH)	UNMATCHED FUNDING						NON-ENHANCED MATCHING (50/50)				ENHANCED MATCHING (75/25)				
Agency:	202506 Colusa		MCAH-TV		MCAH-SIDS		AGENCY FUNDS				MCAH-Cnty NE				MCAH-Cnty E	
SubK:		(1)	(2)	(3)	(4)	(5)	(6)	(7)	(8)	(9)	(10)	(11)	(12)	(13)	(14)	(15)
		TOTAL FUNDING	%	MCAH-TV	%	MCAH-SIDS	%	Agency Funds*	%	Combined Fed/State	%	Combined Fed/Agency*	%	Combined Fed/State	%	Combined Fed/Agency*
(II) OPERATING EXPENSES DETAIL											% TRAVEL NON-ENH MATCH 22.50%				% TRAVEL ENH MATCH 30.75%		% PERSONNEL MATCH 42.16%
	TOTAL OPERATING EXPENSES	**7,300.00**		**5,423.88**		**0.00**		**0.00**		**0.00**		**1,876.12**		**0.00**		**0.00**	Match Available
	TRAVEL	1,500.00	100.00%	1,500.00		0.00		0.00		0.00	0.00%	0.00		0.00	0.00%	0.00	**53.25%**
	TRAINING	1,500.00	57.84%	867.60		0.00		0.00		0.00	42.16%	632.40		0.00	0.00%	0.00	**0.00%**
1	COMMUNICATIONS	950.00	57.84%	549.48		0.00		0.00		0.00	42.16%	400.52					**0.00%**
2	INSURANCE	400.00	57.84%	231.36		0.00		0.00		0.00	42.16%	168.64					**0.00%**
3	MAINTENANCE OF EQUIPMENT	800.00	57.84%	462.72		0.00		0.00		0.00	42.16%	337.28					**0.00%**
4	MAINTENANCE OF BUILDING AND GROUNDS	300.00	57.84%	173.52		0.00		0.00		0.00	42.16%	126.48					**0.00%**
5	OFFICE AND POSTAGE EXPENSES	500.00	57.84%	289.20		0.00		0.00		0.00	42.16%	210.80					**0.00%**
6	TOLL FREE	350.00	100.00%	350.00		0.00		0.00		0.00	0.00%	0.00					**42.16%**
7	MEMBERSHIPS	1,000.00	100.00%	1,000.00		0.00		0.00		0.00	0.00%	0.00					**42.16%**
8				0.00		0.00		0.00		0.00		0.00					
9				0.00		0.00		0.00		0.00		0.00					
10				0.00		0.00		0.00		0.00		0.00					
11				0.00		0.00		0.00		0.00		0.00					
12				0.00		0.00		0.00		0.00		0.00					
13				0.00		0.00		0.00		0.00		0.00					
14				0.00		0.00		0.00		0.00		0.00					
15				0.00		0.00		0.00		0.00		0.00					

** Unmatched Operating Expenses are not eligible for Federal matching funds (Title XIX). Expenses may only be charged to Unmatched Title V (Col. 3), State General Funds (Col. 5), and/or Agency (Col. 7) funds.

(III) CAPITAL EXPENDITURE DETAIL											
TOTAL CAPITAL EXPENDITURES			0.00		0.00		0.00		0.00		0.00

(IV) OTHER COSTS DETAIL													% PERSONNEL MATCH 42.16%
	TOTAL OTHER COSTS	**4,309.89**		**4,309.89**		**0.00**		**0.00**		**0.00**		**0.00**		**0.00**		**0.00**	
	SUBCONTRACTS																
1	Health Officer	2,000.00	100.00%	2,000.00		0.00		0.00		0.00		0.00		0.00	0.00%	0.00	
2				0.00		0.00		0.00		0.00		0.00		0.00		0.00	
3				0.00		0.00		0.00		0.00		0.00		0.00		0.00	
4				0.00		0.00		0.00		0.00		0.00		0.00		0.00	
5				0.00		0.00		0.00		0.00		0.00		0.00		0.00	
6				0.00		0.00		0.00		0.00		0.00		0.00		0.00	
7				0.00		0.00		0.00		0.00		0.00		0.00		0.00	
8				0.00		0.00		0.00		0.00		0.00		0.00		0.00	
	OTHER CHARGES																Match Available
	AGENCY'S TOTAL INDIRECT COSTS																
	AGENCY'S OTHER INDIRECT COSTS			0.00				0.00			0.00%						Match Available
1	Client Materials	1,500.00	100.00%	1,500.00		0.00		0.00		0.00	0.00%	0.00					**42.16%**
2	Educational Materials	809.89	100.00%	809.89		0.00		0.00		0.00	0.00%	0.00					**42.16%**
3				0.00		0.00		0.00		0.00		0.00					
4				0.00		0.00		0.00		0.00		0.00					
5				0.00		0.00		0.00		0.00		0.00					
6				0.00		0.00		0.00		0.00		0.00					
7				0.00		0.00		0.00		0.00		0.00					
8				0.00		0.00		0.00		0.00		0.00					

(V) INDIRECT COSTS DETAIL													
	TOTAL INDIRECT COSTS	**24,518.40**		**14,164.28**		**0.00**		**0.00**		**0.00**		**10,354.12**	
25.00%									0.00%	0.00	42.23%	10,353.86	
25.00%	**of Total Wages + Fringe Benefits**	24,518.40	57.77%	14,164.28		0.00		0.00		0.00	42.23%	10,354.12	

California Department of Public Health CDPH Maternal, Child and Adolescent Health Division

Program:	Maternal, Child and Adolescent Health (MCAH)
Agency:	202506 Colusa
SubK:	

(I) PERSONNEL DETAIL

						UNMATCHED FUNDING						NON-ENHANCED MATCHING (50/50)				ENHANCED MATCHING (75/25)					
						MCAH-TV		MCAH-SIDS		AGENCY FUNDS				MCAH-Cnty NE				MCAH-Cnty E			
					(1)	(2)	(3)	(4)	(5)	(6)	(7)	(8)	(9)	(10)	(11)	(12)	(13)	(14)	(15)		
					TOTAL FUNDING	%	MCAH-TV	%	MCAH-SIDS	%	Agency Funds*	%	Combined Fed/State	%	Combined Fed/Agency*	%	Combined Fed/State	%	Combined Fed/Agency*		
				TOTAL PERSONNEL COSTS	98,073.60		53,116.95		3,000.00		541.20		0.00		40,152.00		0.00		1,263.46		
			FRINGE BENEFIT RATE	60.00%	36,777.60		19,918.86		1,125.00		202.95		0.00		15,057.00		0.00	5.0%	473.80		
				TOTAL WAGES	61,296.00		33,198.09		1,875.00		338.25		0.00		25,095.00		0.00		789.66		
	FULL NAME (First Name Last Name)	TITLE OR CLASSIFICATION (No Acronyms)	% FTE	ANNUAL SALARY	TOTAL WAGES															J-Pers MCF Per Staff	Staff Traveling (X)
1	Kaela Beckley	Nursing Supervisor SPMP	1.00%	128,436.00	1,284.00	38.50%	494.34		0.00		0.00		0.00	0.00%	0.00		0.00	61.50%	789.66	61.50%	X
2	Consuelo Lopez	Public Health Assistant	5.00%	65,315.00	3,266.00	51.09%	1,668.50		0.00		0.00		0.00	48.91%	1,597.50		0.00		0.00	61.50%	
3	Stephanie Rosas	MCAH Program Director	44.00%	79,923.00	35,166.00	55.00%	19,341.30		0.00		0.00		0.00	45.00%	15,824.70		0.00		0.00	61.50%	X
4	Stephanie Rosas	Perinatal Services Coordinator	24.00%	79,923.00	19,182.00	60.00%	11,509.20		0.00		0.00		0.00	40.00%	7,672.80		0.00		0.00	61.50%	
5	Stephanie Rosas	SIDS Coordinator	3.00%	79,923.00	2,398.00	7.70%	184.75	78.19%	1,875.00	14.11%	338.25		0.00		0.00		0.00		0.00	61.50%	
6					0.00		0.00		0.00		0.00		0.00		0.00		0.00		0.00	0.00%	
7					0.00		0.00		0.00		0.00		0.00		0.00		0.00		0.00	0.00%	
8					0.00		0.00		0.00		0.00		0.00		0.00		0.00		0.00	0.00%	
9					0.00		0.00		0.00		0.00		0.00		0.00		0.00		0.00	0.00%	
10					0.00		0.00		0.00		0.00		0.00		0.00		0.00		0.00	0.00%	
11					0.00		0.00		0.00		0.00		0.00		0.00		0.00		0.00	0.00%	
12					0.00		0.00		0.00		0.00		0.00		0.00		0.00		0.00	0.00%	
13					0.00		0.00		0.00		0.00		0.00		0.00		0.00		0.00	0.00%	
14					0.00		0.00		0.00		0.00		0.00		0.00		0.00		0.00	0.00%	
15					0.00		0.00		0.00		0.00		0.00		0.00		0.00		0.00	0.00%	
16					0.00		0.00		0.00		0.00		0.00		0.00		0.00		0.00	0.00%	
17					0.00		0.00		0.00		0.00		0.00		0.00		0.00		0.00	0.00%	
18					0.00		0.00		0.00		0.00		0.00		0.00		0.00		0.00	0.00%	
19					0.00		0.00		0.00		0.00		0.00		0.00		0.00		0.00	0.00%	
20					0.00		0.00		0.00		0.00		0.00		0.00		0.00		0.00	0.00%	
21					0.00		0.00		0.00		0.00		0.00		0.00		0.00		0.00	0.00%	
22					0.00		0.00		0.00		0.00		0.00		0.00		0.00		0.00	0.00%	
23					0.00		0.00		0.00		0.00		0.00		0.00		0.00		0.00	0.00%	
24					0.00		0.00		0.00		0.00		0.00		0.00		0.00		0.00	0.00%	
25					0.00		0.00		0.00		0.00		0.00		0.00		0.00		0.00	0.00%	
26					0.00		0.00		0.00		0.00		0.00		0.00		0.00		0.00	0.00%	
27					0.00		0.00		0.00		0.00		0.00		0.00		0.00		0.00	0.00%	
28					0.00		0.00		0.00		0.00		0.00		0.00		0.00		0.00	0.00%	
29					0.00		0.00		0.00		0.00		0.00		0.00		0.00		0.00	0.00%	
30					0.00		0.00		0.00		0.00		0.00		0.00		0.00		0.00	0.00%	
31					0.00		0.00		0.00		0.00		0.00		0.00		0.00		0.00	0.00%	
32					0.00		0.00		0.00		0.00		0.00		0.00		0.00		0.00	0.00%	
33					0.00		0.00		0.00		0.00		0.00		0.00		0.00		0.00	0.00%	
34					0.00		0.00		0.00		0.00		0.00		0.00		0.00		0.00	0.00%	
35					0.00		0.00		0.00		0.00		0.00		0.00		0.00		0.00	0.00%	
36					0.00		0.00		0.00		0.00		0.00		0.00		0.00		0.00	0.00%	
37					0.00		0.00		0.00		0.00		0.00		0.00		0.00		0.00	0.00%	
38					0.00		0.00		0.00		0.00		0.00		0.00		0.00		0.00	0.00%	
39					0.00		0.00		0.00		0.00		0.00		0.00		0.00		0.00	0.00%	
40					0.00		0.00		0.00		0.00		0.00		0.00		0.00		0.00	0.00%	
41					0.00		0.00		0.00		0.00		0.00		0.00		0.00		0.00	0.00%	
42					0.00		0.00		0.00		0.00		0.00		0.00		0.00		0.00	0.00%	
43					0.00		0.00		0.00		0.00		0.00		0.00		0.00		0.00	0.00%	
44					0.00		0.00		0.00		0.00		0.00		0.00		0.00		0.00	0.00%	
45					0.00		0.00		0.00		0.00		0.00		0.00		0.00		0.00	0.00%	
46					0.00		0.00		0.00		0.00		0.00		0.00		0.00		0.00	0.00%	
47					0.00		0.00		0.00		0.00		0.00		0.00		0.00		0.00	0.00%	
48					0.00		0.00		0.00		0.00		0.00		0.00		0.00		0.00	0.00%	
49					0.00		0.00		0.00		0.00		0.00		0.00		0.00		0.00	0.00%	
50					0.00		0.00		0.00		0.00		0.00		0.00		0.00		0.00	0.00%	
51					0.00		0.00		0.00		0.00		0.00		0.00		0.00		0.00	0.00%	
52					0.00		0.00		0.00		0.00		0.00		0.00		0.00		0.00	0.00%	
53					0.00		0.00		0.00		0.00		0.00		0.00		0.00		0.00	0.00%	
54					0.00		0.00		0.00		0.00		0.00		0.00		0.00		0.00	0.00%	
55					0.00		0.00		0.00		0.00		0.00		0.00		0.00		0.00	0.00%	

California Department of Public Health CDPH Maternal, Child and Adolescent Health Division

Program:	Maternal, Child and Adolescent Health (MCAH)	UNMATCHED FUNDING						NON-ENHANCED MATCHING (50/50)				ENHANCED MATCHING (75/25)					
Agency:	202506 Colusa	MCAH-TV		MCAH-SIDS		AGENCY FUNDS				MCAH-Cnty NE				MCAH-Cnty E			
SubK:		(1)	(2)	(3)	(4)	(5)	(6)	(7)	(8)	(9)	(10)	(11)	(12)	(13)	(14)	(15)	
		TOTAL FUNDING	%	MCAH-TV	%	MCAH-SIDS	%	Agency Funds*	%	Combined Fed/State	%	Combined Fed/Agency*	%	Combined Fed/State	%	Combined Fed/Agency*	
56		0.00		0.00		0.00		0.00		0.00		0.00		0.00		0.00	0.00%
57		0.00		0.00		0.00		0.00		0.00		0.00		0.00		0.00	0.00%
58		0.00		0.00		0.00		0.00		0.00		0.00		0.00		0.00	0.00%
59		0.00		0.00		0.00		0.00		0.00		0.00		0.00		0.00	0.00%
60		0.00		0.00		0.00		0.00		0.00		0.00		0.00		0.00	0.00%
61		0.00		0.00		0.00		0.00		0.00		0.00		0.00		0.00	0.00%
62		0.00		0.00		0.00		0.00		0.00		0.00		0.00		0.00	0.00%
63		0.00		0.00		0.00		0.00		0.00		0.00		0.00		0.00	0.00%
64		0.00		0.00		0.00		0.00		0.00		0.00		0.00		0.00	0.00%
65		0.00		0.00		0.00		0.00		0.00		0.00		0.00		0.00	0.00%
66		0.00		0.00		0.00		0.00		0.00		0.00		0.00		0.00	0.00%
67		0.00		0.00		0.00		0.00		0.00		0.00		0.00		0.00	0.00%
68		0.00		0.00		0.00		0.00		0.00		0.00		0.00		0.00	0.00%
69		0.00		0.00		0.00		0.00		0.00		0.00		0.00		0.00	0.00%
70		0.00		0.00		0.00		0.00		0.00		0.00		0.00		0.00	0.00%
71		0.00		0.00		0.00		0.00		0.00		0.00		0.00		0.00	0.00%
72		0.00		0.00		0.00		0.00		0.00		0.00		0.00		0.00	0.00%
73		0.00		0.00		0.00		0.00		0.00		0.00		0.00		0.00	0.00%
74		0.00		0.00		0.00		0.00		0.00		0.00		0.00		0.00	0.00%
75		0.00		0.00		0.00		0.00		0.00		0.00		0.00		0.00	0.00%
76		0.00		0.00		0.00		0.00		0.00		0.00		0.00		0.00	0.00%
77		0.00		0.00		0.00		0.00		0.00		0.00		0.00		0.00	0.00%
78		0.00		0.00		0.00		0.00		0.00		0.00		0.00		0.00	0.00%
79		0.00		0.00		0.00		0.00		0.00		0.00		0.00		0.00	0.00%
80		0.00		0.00		0.00		0.00		0.00		0.00		0.00		0.00	0.00%
81		0.00		0.00		0.00		0.00		0.00		0.00		0.00		0.00	0.00%
82		0.00		0.00		0.00		0.00		0.00		0.00		0.00		0.00	0.00%
83		0.00		0.00		0.00		0.00		0.00		0.00		0.00		0.00	0.00%
84		0.00		0.00		0.00		0.00		0.00		0.00		0.00		0.00	0.00%
85		0.00		0.00		0.00		0.00		0.00		0.00		0.00		0.00	0.00%
86		0.00		0.00		0.00		0.00		0.00		0.00		0.00		0.00	0.00%
87		0.00		0.00		0.00		0.00		0.00		0.00		0.00		0.00	0.00%
88		0.00		0.00		0.00		0.00		0.00		0.00		0.00		0.00	0.00%
89		0.00		0.00		0.00		0.00		0.00		0.00		0.00		0.00	0.00%
90		0.00		0.00		0.00		0.00		0.00		0.00		0.00		0.00	0.00%
91		0.00		0.00		0.00		0.00		0.00		0.00		0.00		0.00	0.00%
92		0.00		0.00		0.00		0.00		0.00		0.00		0.00		0.00	0.00%
93		0.00		0.00		0.00		0.00		0.00		0.00		0.00		0.00	0.00%
94		0.00		0.00		0.00		0.00		0.00		0.00		0.00		0.00	0.00%
95		0.00		0.00		0.00		0.00		0.00		0.00		0.00		0.00	0.00%
96		0.00		0.00		0.00		0.00		0.00		0.00		0.00		0.00	0.00%
97		0.00		0.00		0.00		0.00		0.00		0.00		0.00		0.00	0.00%
98		0.00		0.00		0.00		0.00		0.00		0.00		0.00		0.00	0.00%
99		0.00		0.00		0.00		0.00		0.00		0.00		0.00		0.00	0.00%
100		0.00		0.00		0.00		0.00		0.00		0.00		0.00		0.00	0.00%
101		0.00		0.00		0.00		0.00		0.00		0.00		0.00		0.00	0.00%
102		0.00		0.00		0.00		0.00		0.00		0.00		0.00		0.00	0.00%
103		0.00		0.00		0.00		0.00		0.00		0.00		0.00		0.00	0.00%
104		0.00		0.00		0.00		0.00		0.00		0.00		0.00		0.00	0.00%
105		0.00		0.00		0.00		0.00		0.00		0.00		0.00		0.00	0.00%
106		0.00		0.00		0.00		0.00		0.00		0.00		0.00		0.00	0.00%
107		0.00		0.00		0.00		0.00		0.00		0.00		0.00		0.00	0.00%
108		0.00		0.00		0.00		0.00		0.00		0.00		0.00		0.00	0.00%
109		0.00		0.00		0.00		0.00		0.00		0.00		0.00		0.00	0.00%
110		0.00		0.00		0.00		0.00		0.00		0.00		0.00		0.00	0.00%
111		0.00		0.00		0.00		0.00		0.00		0.00		0.00		0.00	0.00%
112		0.00		0.00		0.00		0.00		0.00		0.00		0.00		0.00	0.00%
113		0.00		0.00		0.00		0.00		0.00		0.00		0.00		0.00	0.00%
114		0.00		0.00		0.00		0.00		0.00		0.00		0.00		0.00	0.00%
115		0.00		0.00		0.00		0.00		0.00		0.00		0.00		0.00	0.00%
116		0.00		0.00		0.00		0.00		0.00		0.00		0.00		0.00	0.00%
117		0.00		0.00		0.00		0.00		0.00		0.00		0.00		0.00	0.00%
118		0.00		0.00		0.00		0.00		0.00		0.00		0.00		0.00	0.00%
119		0.00		0.00		0.00		0.00		0.00		0.00		0.00		0.00	0.00%

California Department of Public Health CDPH Maternal, Child and Adolescent Health Division

Program:	Maternal, Child and Adolescent Health (MCAH)	UNMATCHED FUNDING						NON-ENHANCED MATCHING (50/50)				ENHANCED MATCHING (75/25)						
Agency:	202506 Colusa		MCAH-TV		MCAH-SIDS		AGENCY FUNDS			MCAH-Cnty NE				MCAH-Cnty E				
SubK:		(1)	(2)	(3)	(4)	(5)	(6)	(7)	(8)	(9)	(10)	(11)	(12)	(13)	(14)	(15)		
		TOTAL FUNDING	%	MCAH-TV	%	MCAH-SIDS	%	Agency Funds*	%	Combined Fed/State	%	Combined Fed/Agency*	%	Combined Fed/State	%	Combined Fed/Agency*		
120		0.00		0.00		0.00		0.00		0.00		0.00		0.00		0.00	0.00%	
121		0.00		0.00		0.00		0.00		0.00		0.00		0.00		0.00	0.00%	
122		0.00		0.00		0.00		0.00		0.00		0.00		0.00		0.00	0.00%	
123		0.00		0.00		0.00		0.00		0.00		0.00		0.00		0.00	0.00%	
124		0.00		0.00		0.00		0.00		0.00		0.00		0.00		0.00	0.00%	
125		0.00		0.00		0.00		0.00		0.00		0.00		0.00		0.00	0.00%	
126		0.00		0.00		0.00		0.00		0.00		0.00		0.00		0.00	0.00%	
127		0.00		0.00		0.00		0.00		0.00		0.00		0.00		0.00	0.00%	
128		0.00		0.00		0.00		0.00		0.00		0.00		0.00		0.00	0.00%	
129		0.00		0.00		0.00		0.00		0.00		0.00		0.00		0.00	0.00%	
130		0.00		0.00		0.00		0.00		0.00		0.00		0.00		0.00	0.00%	
131		0.00		0.00		0.00		0.00		0.00		0.00		0.00		0.00	0.00%	
132		0.00		0.00		0.00		0.00		0.00		0.00		0.00		0.00	0.00%	
133		0.00		0.00		0.00		0.00		0.00		0.00		0.00		0.00	0.00%	
134		0.00		0.00		0.00		0.00		0.00		0.00		0.00		0.00	0.00%	
135		0.00		0.00		0.00		0.00		0.00		0.00		0.00		0.00	0.00%	
136		0.00		0.00		0.00		0.00		0.00		0.00		0.00		0.00	0.00%	
137		0.00		0.00		0.00		0.00		0.00		0.00		0.00		0.00	0.00%	
138		0.00		0.00		0.00		0.00		0.00		0.00		0.00		0.00	0.00%	
139		0.00		0.00		0.00		0.00		0.00		0.00		0.00		0.00	0.00%	
140		0.00		0.00		0.00		0.00		0.00		0.00		0.00		0.00	0.00%	
141		0.00		0.00		0.00		0.00		0.00		0.00		0.00		0.00	0.00%	
142		0.00		0.00		0.00		0.00		0.00		0.00		0.00		0.00	0.00%	
143		0.00		0.00		0.00		0.00		0.00		0.00		0.00		0.00	0.00%	
144		0.00		0.00		0.00		0.00		0.00		0.00		0.00		0.00	0.00%	
145		0.00		0.00		0.00		0.00		0.00		0.00		0.00		0.00	0.00%	
146		0.00		0.00		0.00		0.00		0.00		0.00		0.00		0.00	0.00%	
147		0.00		0.00		0.00		0.00		0.00		0.00		0.00		0.00	0.00%	
148		0.00		0.00		0.00		0.00		0.00		0.00		0.00		0.00	0.00%	
149		0.00		0.00		0.00		0.00		0.00		0.00		0.00		0.00	0.00%	
150		0.00		0.00		0.00		0.00		0.00		0.00		0.00		0.00	0.00%	

Colusa County

Agenda Request Form

Item ID#: 2025-52 **Agenda Date:** 11/4/2025 **Item 3**

TREASURER/TAX COLLECTOR

Accept September 2025 Treasury Monthly Investment Report as presented.

Detailed Description/Background of Request
Required pursuant to Section 27131-27137 of the Government Code

On 09/30/25 the existing portfolio was converted from amortized cost accounting to cash basis accounting. Book values will remain at the original cost, no further amortization will be recorded, and interest income will reflect coupon payments only. All write down schedules have been tied back to historical amortization schedules.

Fiscal Impact/Funding Source
N/A

Action for the Clerk
None

Prior Board Action
N/A

Attachments:
1. 09_25 Treasury Report

COLUSA COUNTY
TREASURER'S MONTHLY INVESTMENT REPORT

AS OF: 9/30/25
DATE: ~~10/21/25~~ 11/4/25

MUNICIPAL BONDS	PURCHASED	BOOK VALUE	YIELD	COUPON	ORIGINAL FACE PAR	COUNTY PAR	US BANK PAR	MATURITY	MARKET VALUE	GAIN/ LOSS	DATE SOLD	PERCENTAGE OF PORTFOLIO
574348CD8								06/01/25	-			
797299LXO	10/28/20	698,221.80	0.85%	3.640%	698,221.80	615,000.00	615,000.00	10/15/25	614,901.60			
260888AD4	02/23/21	402,096.00	0.87%	0.972%	402,096.00	400,000.00	400,000.00	06/01/26	392,264.00			
130179KW3	02/05/21	878,528.00	1.51%	3.181%	878,528.00	800,000.00	800,000.00	04/01/27	786,432.00			
899141BB0	02/05/21	693,578.75	1.18%	2.713%	693,578.75	635,000.00	635,000.00	05/01/27	622,427.00			
260888AE2	02/23/21	606,030.00	1.20%	1.367%	606,030.00	600,000.00	600,000.00	06/01/27	575,052.00			
971252AH4	05/27/21	187,332.85	2.03%	2.220%	187,332.85	185,000.00	185,000.00	08/01/28	175,278.25			
971252AK7	05/27/21	268,906.10	2.38%	2.560%	268,906.10	265,000.00	265,000.00	08/01/30	244,451.90			
971252AL5	05/27/21	574,085.20	2.48%	2.660%	574,085.20	565,000.00	565,000.00	08/01/31	512,952.20			
797679CF2	11/24/21	261,175.20	2.20%	2.278%	261,175.20	260,000.00	260,000.00	03/01/28	249,085.20			
797669ZR2	11/24/21	3,188,047.50	2.00%	2.768%	3,188,047.50	3,025,000.00	3,025,000.00	07/01/31	2,811,374.50			
672325N45	11/23/21	1,280,104.10	1.87%	2.061%	1,280,104.10	1,265,000.00	1,265,000.00	08/01/28	1,198,056.20			
38122NB35	11/12/21	12,312,952.55	1.87%	2.246%	12,312,952.55	12,000,000.00	12,000,000.00	06/01/29	11,265,360.00			
79739GPE0	12/09/21	717,276.00	2.07%	2.356%	717,276.00	700,000.00	700,000.00	07/01/31	627,620.00			
835588BC7	01/27/22	523,892.25	2.12%	2.088%	523,892.25	525,000.00	525,000.00	03/01/29	491,011.50			
13048VZT8	01/05/22	505,880.00	2.35%	2.511%	505,880.00	500,000.00	500,000.00	02/01/30	462,640.00			
13048VZU5	01/05/22	395,975.65	2.63%	2.661%	395,975.65	395,000.00	395,000.00	02/01/31	360,330.85			
055022AK3	01/27/22	1,168,906.00	2.42%	2.635%	1,168,906.00	1,150,000.00	1,150,000.00	08/01/30	1,069,316.00			
79770GJG2	12/15/21	2,052,020.00	2.21%	2.543%	2,052,020.00	2,000,000.00	2,000,000.00	08/01/30	1,856,620.00			
79739GPM2	12/09/21	254,220.00	2.04%	2.256%	254,220.00	250,000.00	250,000.00	07/01/30	228,277.50			
854434AH0	11/12/21	546,475.75	2.06%	2.340%	546,475.75	535,000.00	535,000.00	04/01/30	494,142.05			
38122ND33	03/30/22	1,876,660.00	3.77%	3.037%	1,876,660.00	2,000,000.00	2,000,000.00	06/01/32	1,789,980.00			
189344FE9	11/23/21	1,000,000.00	2.25%	2.250%	1,000,000.00	1,000,000.00	1,000,000.00	06/01/31	897,800.00			
Municipal Total		**30,392,363.70**			**30,392,363.70**	**29,670,000.00**	**29,670,000.00**		**27,725,372.75**			**15.9%**
US Treasury/Agency Securities												
3133ENZP8*	08/29/22	5,475,000.00	4.90%	4.900%	5,475,000.00	5,475,000.00	5,475,000.00	06/29/32	5,446,256.25			
3130B6XF8	07/16/25	5,000,000.00	4.70%	4.700%	5,000,000.00	5,000,000.00	5,000,000.00	07/16/30	5,002,150.00			
3130B2N27*											Called 02/10/25	
3134HAZP1*										148.60	Called 02/26/25	
3011ERE98*										498.00	Called 06/26/25	
3130B3MA8*											Called 02/07/25	
Treasury/Agency Total		**10,475,000.00**			**10,475,000.00**	**10,475,000.00**	**10,475,000.00**		**10,448,406.25**			**5.5%**
Grand Total		**$ 40,867,363.70**			**40,867,363.70**	**40,145,000.00**	**40,145,000.00**					
Interest Liability		-					**US Bank Outside Securities Safekeeping**		**38,173,779.00**		Unrealized	
NET BOOK		**40,867,363.70**					**US Bank Outside Securities Money Market**		**86,829.49**	$ (2,151,529.27)	Gain/Loss	
Meeder Investment Book Value		**$ 80,764,795.92**					**US Bank (Meeder) Safekeeping**		**81,220,021.86**			**42.2%**

CALIFORNIA ASSET MANAGEMENT PROGRAM

		7 Day Avg	
COUNTY	$68,370,946.64	4.36%	**35.7%**
COP Project Fund*	$5,917,312.50		

LAIF/STATE OF CALIFORNIA LOCAL AGENCY FUND

		QTR TO DATE	DAILY		
SRWSLD	73,905.52	4.24%	4.19%		
REC DIST 108	72,348.76	4.24%	4.19%		
REC DIST 1004	-	4.24%	4.19%		
COUNTY	201.41	4.24%	4.19%		
CCOE	140.58	4.24%	4.19%		
TOTAL LAIF	146,596.27				**0.1%**
CASH	1,367,414.88				**0.7%**
TOTAL LIQUID	69,884,957.79		**36.47%**	**Liquidity**	
GRAND TOTAL	**$ 191,603,946.90**				**100.0%**

INTEREST RECEIVED

July-Aug-Sept 2025	2,034,694.50	9/30/2025	Est. 4.00%
April-May-June 2025	2,063,378.24	6/30/2025	3.99%
Jan-Feb-Mar 2025	2,010,853.84	3/31/2025	3.99%
Oct-Nov-Dec 2024	2,242,974.49	12/31/2024	4.77%
July-Aug-Sept 2024	3,255,354.99	9/30/2024	7.56%
Apr-May-June 2024	1,868,644.08	6/30/2024	4.14%
Jan-Feb-Mar 2024	1,958,136.37	3/29/2024	4.44%
Oct-Nov-Dec 2023	1,710,187.05	12/29/2023	3.88%
July-Aug-Sept 2023	1,923,740.36	9/30/2023	4.73%
Apr-May-June 2023	1,765,358.48	6/30/2023	4.25%
Jan-Feb-March 2023	1,577,820.28	3/31/2023	3.94%

Note 1: US Bank did the bond valuation.
Note 2: Liquidity (excluding RD LAIF accounts that are segregated) is 36.43%
Note 3: All Investments comply with the Investment Policy and the Treasurer's Goals for Colusa County.
Note 4: There is sufficient liquidity to meet cash flow for the next 6 months.
Note 5: Interest will be reduced $25,000 at the end every quarter for treasury fee.
Note 6: Bonds with astrict (*) are callable
Note 7: Municipal Bonds are Government Entities within the State of California.
Note 8: COP Project funds are not managed by the Treasurer and not included in the County portfolio totals.
Note 9: As of 09/30/25, amortized basis discontinued. Exisiting portfolio was converted from amortized cost accounting to cash basis accounting. Book values will remain at original cost , no further amoritzation will be recorded, and interest income will reflect coupon payments only. All write downs have been tied back to historical amortization schedules, with any variances attributable to rounding.

CINDY DILLARD
TREASURER-TAX COLLECTOR

Colusa County

Agenda Request Form

Item ID#: 2025-61 **Agenda Date:** 11/4/2025 **Item 4**

DISTRICT ATTORNEY

Authorize the District Attorney to annually apply for the Victim Witness Assistance Program Grant Subaward through the California Governor's Office of Emergency Services and further authorize the District Attorney to execute any resulting grant subaward and related agreements subject to prior approval by the Board of Supervisors.

Detailed Description/Background of Request
Authorize the District Attorney or Official Designee to annually apply, sign, and accept the Victim Witness Assistance Program Grant Subaward through the California Governor's Office of Emergency Services and further sign any resulting grant subawards, modifications and amendments, subject to Board approval.

The District Attorney's office applies for, and receives, grant funding annually from the California Governor's Office of Emergency Services for the Victim Witness Assistance Program. The District Attorney is required to obtain written authorization for executing the grant Subawards and be authorized to sign agreements, amendments, and extensions.

Per the Subrecipient Handbook, all subrecipients must certify they have written authority by the governing body granting authority to the Authorized Agent (District Attorney) to enter the Subrecipient into a specific Grant Subaward with CalOES.

Fiscal Impact/Funding Source
All previous and current Match Waiver Requests have been approved. Future Match Waiver Requests will be submitted. This is a reimbursement of funds allocated to the County in the amount of approximately $270,000 per FY.

Action for the Clerk
Send Certified Board Order to Devin Kelley at the District Attorney's Office.

Prior Board Action
Previously approved on September 24, 2019, October 26, 2021, September 27, 2022, December 19, 2023, December 17, 2024.

Attachments:
None

Colusa County

Agenda Request Form

Item ID#: 2025-63 **Agenda Date:** 11/4/2025 **Item 5**

CLERK-RECORDER REGISTRAR OF VOTERS

Adopt a Resolution Appointing Nominees to the office of their respective Districts in lieu of election pursuant to Water Code 50742 and Election Code 10515(b).

Detailed Description/Background of Request
Water Code 50740 provides that if by 5 p.m. on the 54th day prior to a general district election the number of nominees does not exceed the number of trustees to be elected and if a petition signed by 5 percent of the voters requesting that the election be held has not been presented to the board, an election shall not be held.50741 provides that when no election is held pursuant to Section 50740 then the board of supervisors shall appoint those nominated for the positions of trustee, and if no person has been nominated for said position, the board of supervisors shall appoint any qualified person or persons. In lieu of the notice provided in Section 50732, notice shall than be published only once stating that the board of supervisors will appoint the trustees and that no election will be held. Water Code 50742 provides that if pursuant to Section 50740 a district election is not held, the board of supervisors of the county in which the district, or the largest part thereof in area, is situated shall at its next regular meeting appoint to the positions of trustees those persons nominated, or if no persons have been nominated for said positions, the board of supervisors shall appoint any qualified person or persons, and such person or persons shall qualify, take office, and serve exactly as if elected at a general district election.

Reclamation District 1004, Reclamation District 108 and the Sacramento River West Side Levee District have requested the appointment of individuals in lieu of election as follows:

Reclamation District 1004
Nicole Garofalo
Gary Bailey
Todd Southam

Reclamation District 108
Todd Miller
Hilary Reinhard

Sacramento River West Side Levee District
Donald Kitamura
Paul Sankey

Fiscal Impact/Funding Source
None

Action for the Clerk
Please provide copy of Resolution to the County Clerk

Prior Board Action
None

Attachments:
1. Resolution Appointing Nominees to Office of Their Respective District
2. Reclamation District 1004 Appointment letter
3. Appointment letter - Colusa County - Sacramento River West Side Levee District
4. RD108 election letter

RESOLUTION NO. _____

RESOLUTION OF THE COLUSA COUNTY BOARD OF SUPERVISORS APPOINTING NOMINEES TO OFFICE OF THEIR RESPECTIVE DISTRICTS PURSUANT TO WATER CODE 50742 AND ELECTIONS CODE SECTION 10515 (b).

WHEREAS, Water Code 50742 provides pursuant to Section 50740 that if a district election is not held, the board of supervisors of the county in which the district, or the largest part thereof in area, is situated shall at its next regular meeting appoint to the positions of trustees those persons nominated, or if no persons have been nominated for said positions, the board of supervisors shall appoint any qualified person or persons, and such person or persons shall qualify, take office, and serve exactly as if elected at a general district election.

WHEREAS, California Elections Code Section 10515 et seq. states if only one person has filed a declaration of candidacy for any elective office, or no person has filed a declaration of candidacy for any office, or the number of persons who have filed a declaration of candidacy the supervising authority shall appoint any person to the office who is qualified on the date when the election would have been held. The person appointed shall qualify and take office and serve exactly as if elected at a general district election for the office.

WHEREAS, the Office of County Clerk and Registrar of Voters of the County of Colusa has reviewed the letter submitted by the District.

WHEREAS, pursuant to Section 10515 of the Elections Code the Colusa County Board of Supervisors is required to appoint candidates to offices which qualify under that section of the Elections Code; and

WHEREAS, a letter requesting appointments to the qualifying offices have been submitted by the District and are on file in the Office of the County Clerk.

NOW, THEREFORE, BE IT RESOLVED that the Colusa County Board of Supervisors appoints Special District Directors to office to serve as indicated.

Section 1 - Appointment in-lieu of Election		
Reclamation District 1004		
4-year term	12/5/2025 – 12/7/2029	Nicole Garofalo
4-year term	12/5/2025 – 12/7/2029	Gary Bailey
4-year term	12/5/2025 – 12/7/2029	Todd Southam
Reclamation District 108		
4-year term	12/5/2025 – 12/7/2029	Todd Miller
4-year term	12/5/2025-12/7/2029	Hilary Reinhard

SACRAMENTO RIVER WEST SIDE LEVEE DISTRICT		
4-year term	12/5/2025-12/7/2029	Donald Kitamura
4-year term	12/5/2025-12/7/2029	Paul Sankey

PASSED AND ADOPTED this 4th day of November, 2025 by the following vote:

AYES:

NOES:

ABSENT:

_____
Daurice K. Smith, Chair

ATTEST: Marcos Kropf, Interim
Clerk of the Board of Supervisors

_____
Patricia Rodriguez, Deputy

APPROVED AS TO FORM:

_____
Richard Stout, County Counsel

MINASIAN LAW

— ESTABLISHED 1941 —

ANDREW J. McCLURE
amcclure@minasianlaw.com

RECEIVED
OCT 03 2025
COUNTY OF COLUSA
BOARD OF SUPERVISORS

September 30, 2025

The Honorable Members of the
Colusa County Board of Supervisors
547 Market Street, Suite 102
Colusa, California 95932

Re: 2025 Election of Trustees – Reclamation District 1004

Dear Honorable Board Members:

This letter is sent to respectfully request that the Board of Supervisors appoint Nicole Garofalo, Todd Southam and Gary Bailey, each as to a four (4) year term, on the Board of Trustees of Reclamation District 1004 in lieu of an election pursuant to California Water Code section 50742.

Thank you for your time and consideration of this matter.

Very truly yours,

MINASIAN LAW, LLP

By: _____
ANDREW J. McCLURE

AJM/vlh
cc: Reclamation District 1004

1681 BIRD STREET ◇ POST OFFICE BOX 1679 ◇ OROVILLE, CALIFORNIA 95965-1679
TEL (530) 533-2885 ◇ FAX (530) 533-0197

COMMISSIONERS
DANIEL TIBBITT, PRESIDENT
ROGER CORNWELL
DON KITAMURA
PAUL SANKEY
STARR WEST

SACRAMENTO RIVER WEST SIDE LEVEE DISTRICT

COLUSA AND YOLO COUNTIES
P.O. Box 50, Grimes, CA 95950-0050
Telephone: (530) 437-2221

GENERAL MANAGER AND SECRETARY
MEEGAN NAGY

October 10, 2025

VIA E-MAIL AND U.S. MAIL

Colusa County Board of Supervisors
c/o Clerk of the Board
546 Market St., Suite 200
Colusa, CA 95932
E-Mail: clerkinfo@countyofcolusa.com

Subject: Appointment of Commissioners of Sacramento River West Side Levee District

Honorable Board of Supervisors:

On behalf of the District, I respectfully request the Colusa County Board of Supervisors appoint Donald Kitamura and Paul Sankey to the office of Commissioner of the District at the next regularly-scheduled meeting of the Board of Supervisors.

The terms of two commissioners expire on December 31, 2025. As such, the District published Notice of an Election and Call for Nominating Petitions in the Pioneer Review on August 22, 2025 and in the Daily Democrat on August 20, 2025. The number of nomination petitions received by the District at the deadline to submit nomination petitions did not exceed the number of seats up for election. The District then published a Notice of No Election in the Pioneer Review on October 3, 2025 and in the Daily Democrat on October 2, 2025. Proofs of publication of the Notice of Election and Call for Nomination Petitions and Notice of No election are attached.

Donald Kitamura and Paul Sankey are qualified to serve as Commissioners and submitted timely nomination petitions to the District. Pursuant to Water Code section 50742, the District requests Colusa County Board of Supervisors appoint the nominees to the office of Commissioner for four (4) year terms, to expire on December 31, 2029.

Thank you for your assistance on this matter. Please contact me office with any questions

Thank you,

Anne Zwald
Executive Administrator

Encl: Proofs of Publication

Woodland Daily Democrat
c/o Legals 57 Commerce Place, Suite A
Vacaville, CA 95687
530-406-6223
legals@dailydemocrat.com

3597500

RECLAMATION DISTRICT NO. 108
PO BOX 50
GRIMES, CA 95950

Legal No. **0006913842**

PROOF OF PUBLICATION
(2015.5 C.C.P.)

STATE OF CALIFORNIA
COUNTY OF YOLO

I am a citizen of the United States. I am over the age of eighteen years and not a party to or interested in the above-entitled matter. I am the Legal Advertising Clerk of the printer and publisher of The Daily Democrat, a newspaper published in the English language in the City of Woodland, County of Yolo, State of California.

I declare that the Daily Democrat is a newspaper of general circulation as defined by the laws of the State of California as determined by this court's order dated June 30, 1952 in the action entitled In the Matter of the Ascertainment and Establishment of the Standing of The Daily Democrat as a Newspaper of General Circulation, Case Number 12659. Said order states "The Daily Democrat" has been established, printed and published in the City of Woodland, County of Yolo, State of California; That it is a newspaper published daily for the dissemination of local and telegraphic news and intelligence of general character and has a bona fide subscription list of paying subscribers; and...THEREFORE, IT IS ORDERED, ADJUDGED AND DECREED:...That "The Daily Democrat" is a newspaper of general circulation for the City of Woodland, County of Yolo, California. Said order has not been revoked.

I declare that this notice, of which the annexed is a printed copy, has been published in each regular and entire issue of said newspaper and not in any supplement thereof on the following dates, to wit:

08/20/2025

I certify (or declare) under penalty of perjury that the foregoing is true and correct.

Dated at Woodland, California, this
20th day of August 2025

Melanie Irmer

(Signature) Melanie Irmer

SACRAMENTO RIVER WEST SIDE LEVEE DISTRICT
NOTICE OF ELECTION AND NOMINATING PETITIONS FOR THE OFFICE OF COMMISSIONER

NOTICE IS HEREBY GIVEN that Sacramento River West Side Levee District shall hold an all-mailed ballot election on **Wednesday, November 12, 2025,** for the purpose of electing two Commissioners to two open seats on its Board of Commissioners. Nominating Petitions for the position of Commissioner may be obtained by calling the District at (530)437-2221 or by picking one up at the District headquarters at 975 Wilson Bend Road, Grimes, CA 95950. Nominating Petitions may be filed in person at the above address or by mail at P.O. Box 50, Grimes, CA 95950. Nominating Petitions must be received by the District no later than 5:00 p.m. on September 19, 2025
If the number of candidates is greater than the number of available seats, an election will be held. Persons interested in serving as Commissioner may obtain more information by contacting the Anne Zwald at (530)437-2221 ext.5.

COLUSA COUNTY Pioneer Review
430 Market Street, Suite E, Colusa, CA 95932
(530) 458-4141

Affidavit of Publication

STATE OF CALIFORNIA, COLUSA COUNTY

SACRAMENTO RIVER WEST SIDE LEVEE DISTRICT NOTICE OF ELECTION AND NOMINATING PETITIONS FOR THE OFFICE OF COMMISSIONER

I am not a party to, nor interested in the above entitled matter. I am the principal clerk of the printer and publisher of the Colusa County Pioneer Review, a newspaper of general circulation, published in the County of Colusa, to which Newspaper has been adjudged a newspaper of general circulation by the Superior Court of the County of Colusa, State of California, under the date of September 19, 2017, Case No. CV24253, that the notice of which the annexed is a true printed copy, has been published in each regular and entire issue of said newspaper and not in any supplement thereof on the following dates, to wit:

Dates: AUGUST 22, 2025

I certify (or declare) under the penalty of perjury under the laws of the State of California that the foregoing is true and correct.

Carol Anderson

Signature

Executed in Colusa, Colusa County, California on

AUGUST 22, 2025

Date

SACRAMENTO RIVER WEST SIDE LEVEE DISTRICT NOTICE OF ELECTION AND NOMINATING PETITIONS FOR THE OFFICE OF COMMISSIONER

NOTICE IS HEREBY GIVEN that Sacramento River West Side Levee District shall hold an all-mailed ballot election on **Wednesday, November 12, 2025**, for the purpose of electing two Commissioners to two open seats on its Board of Commissioners. Nominating Petitions for the position of Commissioner may be obtained by calling the District at (530)437-2221 or by picking one up at the District headquarters at 975 Wilson Bend Road, Grimes, CA 95950. Nominating Petitions may be filed in person at the above address or by mail at P.O. Box 50, Grimes, CA 95950. **Nominating Petitions must be received by the District no later than 5:00 p.m. on September 19, 2025**

If the number of candidates is greater than the number of available seats, an election will be held. Persons interested in serving as Commissioner may obtain more information by contacting the Anne Zwald at (530)437-2221 ext.5 **08/22/2025 · CCPR**

Woodland Daily Democrat
c/o Legals 57 Commerce Place, Suite A
Vacaville, CA 95687
530-406-6223
legals@dailydemocrat.com

3597500

RECLAMATION DISTRICT NO. 108
PO BOX 50
GRIMES, CA 95950

PROOF OF PUBLICATION
(2015.5 C.C.P.)

STATE OF CALIFORNIA
COUNTY OF YOLO

I am a citizen of the United States. I am over the age of eighteen years and not a party to or interested in the above-entitled matter. I am the Legal Advertising Clerk of the printer and publisher of The Daily Democrat, a newspaper published in the English language in the City of Woodland, County of Yolo, State of California.

I declare that the Daily Democrat is a newspaper of general circulation as defined by the laws of the State of California as determined by this court's order dated June 30, 1952 in the action entitled In the Matter of the Ascertainment and Establishment of the Standing of The Daily Democrat as a Newspaper of General Circulation, Case Number 12659. Said order states "The Daily Democrat" has been established, printed and published in the City of Woodland, County of Yolo, State of California; That it is a newspaper published daily for the dissemination of local and telegraphic news and intelligence of general character and has a bona fide subscription list of paying subscribers; and...THEREFORE, IT IS ORDERED, ADJUDGED AND DECREED:...That "The Daily Democrat" is a newspaper of general circulation for the City of Woodland, County of Yolo, California. Said order has not been revoked.

I declare that this notice, of which the annexed is a printed copy, has been published in each regular and entire issue of said newspaper and not in any supplement thereof on the following dates, to wit:

10/02/2025

I certify (or declare) under penalty of perjury that the foregoing is true and correct.

Dated at Woodland, California, this
3rd day of October 2025

Melanie Irmer

(Signature) Melanie Irmer

Legal No. **0006923628**

NOTICE OF NO ELECTION IN SACRAMENTO RIVER WEST SIDE LEVEE DISTRICT

NOTICE IS HEREBY GIVEN that the Board of Supervisors of Colusa County will appoint the persons to fill the two (2) positions of Commissioner of Sacramento River West Side Levee District whose terms expire this year and that, in accordance with the provisions of the Levee District Act, no election will be held this year within the District for the office of Commissioner.

Date: September 29, 2025
/s/Meegan Nagy
Secretary, Board of Commissioners

COLUSA COUNTY Pioneer Review
430 Market Street, Suite E, Colusa, CA 95932
(530) 458-4141

Affidavit of Publication

STATE OF CALIFORNIA, COLUSA COUNTY

**NOTICE OF
NO ELECTION IN
SACRAMENTO WEST SIDE
LEVEE DISTRICT**

I am not a party to, nor interested in the above entitled matter. I am the principal clerk of the printer and publisher of the Colusa County Pioneer Review, a newspaper of general circulation, published in the County of Colusa, to which Newspaper has been adjudged a newspaper of general circulation by the Superior Court of the County of Colusa, State of California, under the date of September 19, 2017, Case No. CV24253, that the notice of which the annexed is a true printed copy, has been published in each regular and entire issue of said newspaper and not in any supplement thereof on the following dates, to wit:

Dates: OCTOBER 3, 2025

I certify (or declare) under the penalty of perjury under the laws of the State of California that the foregoing is true and correct.

Carol Anderson

Signature

Executed in Colusa, Colusa County, California on

OCTOBER 3, 2025

Date

NOTICE OF NO ELECTION IN SACRAMENTO RIVER WEST SIDE LEVEE DISTRICT

NOTICE IS HEREBY GIVEN that the Board of Supervisors of Colusa County will appoint the persons to fill the two (2) positions of Commissioner of Sacramento River West Side Levee District whose terms expire this year, and that, in accordance with the provisions of the Levee District Act, no election will be held this year within the District for the office of Commissioner.

Date: September 29, 2025

/s/Meegan Nagy
Secretary, Board of Commissioners

10/3/2025 · CCPR

October 10, 2025

VIA E-MAIL AND U.S. MAIL

Colusa County Board of Supervisors
c/o Clerk of the Board
546 Market St., Suite 200
Colusa, CA 95932
E-Mail: clerkinfo@countyofcolusa.com

Subject: Appointment of Trustees for Reclamation District No. 108

Honorable Board of Supervisors:

On behalf of the District, I respectfully request the Colusa County Board of Supervisors appoint Todd Miller and Hilary Reinhard to the office of Trustee of the District at the next regularly-scheduled meeting of the Board of Supervisors.

The terms of two trustees expire on December 5, 2025. As such, the District published Notice of an Election and Call for Nominating Petitions in the Pioneer Review on August 22, 2025 and in the Daily Democrat on August 20, 2025. The number of nomination petitions received by the District at the deadline to submit nomination petitions did not exceed the number of seats up for election. The District then published a Notice of No Election in the Pioneer Review on October 3, 2025 and in the Daily Democrat on October 2, 2025. Proofs of publication of the Notice of Election and Call for Nomination Petitions and Notice of No election are attached.

Todd Miller and Hilary Reinhard are qualified to serve as Trustees and submitted timely nomination petitions to the District. Pursuant to Water Code section 50742, the District requests Colusa County Board of Supervisors appoint the nominees to the office of Trustee for four (4) year terms, to expire on December 7, 2029.

Thank you for your assistance on this matter. Please contact our office with any questions

Thank you,

Anne Zwald
Executive Administrator

Encl: Proofs of Publication

975 Wilson Bend Road, P.O. Box 50
Grimes, CA 95950
OFFICE: (530) 437-2221
WEB: RD108.org

Colusa County

Agenda Request Form

Item ID#: 2025-62 **Agenda Date:** 11/4/2025 **Item 6**

CLERK-RECORDER REGISTRAR OF VOTERS

Adopt a Resolution Appointing Directors to Districts in lieu of Election pursuant to Election Code 10515 et seq.

Detailed Description/Background of Request
California Election Code Section 10515et seq. states if, by 5 p.m. on the 83rd day prior to the day fixed for the general district election: (1) only one person has filed a declaration of candidacy for any elective office to be filled at that election, (2) no one has filed a declaration of candidacy for such an office, (3) in the case of directors to be elected from the district at large, the number of persons who have filed a declaration of candidacy for director at large does not exceed the number of offices of director at large to be filled at that election, or (4) in the case of directors who must reside in a division but be elected at large, the number of candidates for director at large from a division does not exceed the number required to be elected director at large while residing in that division; and if a petition signed by 10 percent of the voters or 50 voters, whichever is the smaller number, in the district or division if elected by division, requesting that the general district election be held has not been presented to the officer conducting the election, he or she shall submit a certificate of these facts to the supervising authority and request that the supervising authority, at a regular or special meeting held prior to the Monday before the first Friday in December in which the election is held, appoint to the office or offices the person or persons, if any, who have filed declarations of candidacy. The supervising authority shall make these appointments.
(b) If no person has filed a declaration of candidacy for any office, the supervising authority shall appoint any person to the office who is qualified on the date when the election would have been held. The person appointed shall qualify and take office and serve exactly as if elected at a general district election for the office.

Fiscal Impact/Funding Source
NA

Action for the Clerk
Provide copy of Resolution to the County Clerk

Prior Board Action
NA

Attachments:

1. Letter Requesting Appointment Glenn-Colusa Irrigation District
2. Letter 4M Water District
3. Appointment letter LaGrande Water District 10162025
4. Resolution appointing Directors to Districts

GCID
GLENN-COLUSA IRRIGATION DISTRICT

BOARD OF DIRECTORS
Logan Dennis, President
Peter Knight, Vice President
John Amaro
Donald R. Bransford
Kelly Ornbaun
GENERAL MANAGER
Jeffrey P. Sutton

RECEIVED
SEP 11 2025
COUNTY OF COLUSA
BOARD OF SUPERVISORS

September 9, 2025

County of Colusa
Clerk of the Board of Supervisors
547 Market Street, Suite 102
Colusa, CA 95932

Subject: Board Appointment for Board of Directors Division 4 and Division 5

Two Glenn-Colusa Irrigation District Board of Directors were up for election on August 26, 2025, Division 4 and Division 5. The filing deadline for incumbents and others to declare candidacy was June 4, 2025. In Division 4 only the incumbent declared candidacy and in Division 5 one non-incumbent declared candidacy. No election was held as no others declared candidacy.

This is a request to have the following two candidates appointed by the Colusa County Board of Supervisors for a four-year term. Directors will take office at 12:00 (noon), on the first Friday in December 2025.

Please appoint the following:

Kelly Ornbaun - Division 5
Sarah Reynolds - Division 4

I am including the updated Secretary of State "Registry of Public Agencies" form SF-405, which has been mailed to the State of California Secretary of State, Glenn County and Colusa County.

If you need any additional information, please feel free to contact me at either 530-934-8881 or kalves@gcid.net.

Sincerely,

Karen M. Alves
Administrative Services Manager

Enclosures (1)

4M Water District
P.O. Box 338
Maxwell, CA 95955

Date: October 17, 2025

To: Cristy Edwards
Colusa County Clerk – Elections Division

From: Katie Mathis, Secretary/Treasurer
4M Water District

RE: Appointment of Directors

Pursuant to Elections code Section 10515, I certify that General District Election to elect Directors of 4M Water District, the number of persons who have filed a Nomination Petition of Candidate for Trustee does not exceed the number of offices to be filled. Also, no petition requesting an election be held has been received. Therefore, I hereby request that the Board of Supervisors appoint in lieu of election the following nominees who have filed a Nomination Petition of Candidate. (Appointees shall qualify and take office and serve as if elected at the election for that office).

Wade Mathis (4-year term) 12/2/25-12/2/2029

Katie Mathis (4-year term) 12/2/25-12/2/2029

Authorized Signature of Person Submitting Recommendation

LaGrande Water District
P.O. Box 756
Williams, CA 95987

Date: October 16, 2025

To: Cristy Edwards
Colusa County Clerk – Elections Division

From: Doris Pearson, Secretary/Treasurer
LaGrande Water District

RE: Appointment of Directors

Pursuant to Elections code Section 10515, I certify that General District Election to elect Directors of LaGrande Water District, the number of persons who have filed a Nomination Petition of Candidate for Trustee does not exceed the number of offices to be filled. Also, no petition requesting an election be held has been received. Therefore, I hereby request that the Board of Supervisors appoint in lieu of election the following nominees who have filed a Nomination Petition of Candidate. (Appointees shall qualify and take office and serve as if elected at the election for that office).

Ron LaGrande (4-year term) 12/5/25-12/3/2029

Larry LaGrande (4-year term) 12/5/25-12/3/2029

Zachary Dennis (4-year term) 12/5/25-12/3/2029

Authorized Signature of Person Submitting Recommendation

RESOLUTION NO.

RESOLUTION OF THE COLUSA COUNTY BOARD OF SUPERVISORS APPOINTING DIRECTORS TO DISTRICTS PURSUANT TO ELECTIONS CODE SECTION 10515 ET SEQ.

WHEREAS, California Elections Code Section 10515 et seq. states if, by 5 p.m. on the 83rd day prior to the day fixed for the general district election: (1) only one person has filed a declaration of candidacy for any elective office to be filled at that election, (2) no one has filed a declaration of candidacy for such an office, (3) in the case of directors to be elected from the district at large, the number of persons who have filed a declaration of candidacy for director at large does not exceed the number of offices of director at large to be filled at that election, or (4) in the case of directors who must reside in a division but be elected at large, the number of candidates for director at large from a division does not exceed the number required to be elected director at large while residing in that division; and if a petition signed by 10 percent of the voters or 50 voters, whichever is the smaller number, in the district or division if elected by division, requesting that the general district election be held has not been presented to the officer conducting the election, he or she shall submit a certificate of these facts to the supervising authority and request that the supervising authority, at a regular or special meeting held prior to the Monday before the first Friday in December in which the election is held, appoint to the office or offices the person or persons, if any, who have filed declarations of candidacy. The supervising authority shall make these appointments.

(b) If no person has filed a declaration of candidacy for any office, the supervising authority shall appoint any person to the office who is qualified on the date when the election would have been held. The person appointed shall qualify and take office and serve exactly as if elected at a general district election for the office;

WHEREAS, the Office of County Clerk and Registrar of Voters of the County of Colusa has reviewed the statement of facts and letter of recommendation submitted by the District;

WHEREAS, pursuant to Section 10515 of the Elections Code the Colusa County Board of Supervisors is required to appoint candidates to offices which qualify under that section of the Elections Code; and

WHEREAS, a letter requesting appointments to the qualifying offices have been submitted by the District and are on file in the Office of the County Clerk.

NOW, THEREFORE, BE IT RESOLVED that the Colusa County Board of Supervisors hereby appoints Special District Directors to office to serve as indicated.

Section 1 - Appointment in-lieu of Election (I) Incumbent		
Glenn-Colusa Irrigation District		
4-year term	12/5/2025 – 12/7/2029	Kelly Ornbaun
4-year term	12/5/2025 – 12/7/2029	Sarah Reynolds(I)

4M Water District		
4-year term	12/5/2025 – 12/7/2029	Wade Mathis
4-year term	12/5/2025 - 12/7/2029	Katie Mathis
LaGrande Water District		
4-year term	12/5/2025 – 12/7/2029	Ron LaGrande
4-year term	12/5/2025 – 12/7/2029	Larry LaGrande
4-year term	12/5/2025 - 12/7/2029	Zachary Dennis

PASSED AND ADOPTED this 4th day of November, 2025 by the following vote:

AYES:

NOES:

ABSENT:

_____
Daurice K. Smith, Chair

ATTEST: Marcos Kropf, Interim
Clerk of the Board of Supervisors

_____
Patricia Rodriguez, Deputy

APPROVED AS TO FORM:

_____
Richard Stout, County Counsel

Colusa County

Agenda Request Form

Item ID#: 2025-71 **Agenda Date:** 11/4/2025 **Item 7**

DISTRICT ATTORNEY

Approve 2nd Modification with the **Colusa County Office of Education (CCOE)** for participation in the School Attendance Review Board (SARB) program, effective August 1, 2025.

Detailed Description/Background of Request
CCOE has requested continued assistance of the District Attorney (DA) with the School Attendance Review Board (SARB) program. The duties of the DA will include attendance at the hearings as well as actions in preparation of the hearings, as needed.
The compensation is also being reduced from $20,000 to $10,000 per school year.

This proposed Second Modification extends the agreement for an additional year, through July 1, 2026, with no changes to the scope of services and also reduces the compensation.

Fiscal Impact/Funding Source
Compensation to the District Attorney's Office in the amount of $10,000 for school year 25/26.

Action for the Clerk
Please obtain signatures, number contract and forward to:

Colusa County Office of Education
Attn: Michael West, Superintendent
345 5th Street
Colusa, CA 95932

Prior Board Action
Original Contract, C23-157
Mod 1, C24-130

Attachments:
1. 2nd Modification Colusa County Office of Educaiton (SARB)
2. C24-130 1st Mod Colusa County Office of Education-DA
3. C23-157 Colusa County Office of Education (SARB)

Second Modification of Participation in the School Attendance Review Board

This Second Modification of School Attendance Review Board contract is between Colusa County (County), a political subdivision of the State of California, and Colusa County Office of Education ("Contractor").

Background

On August 1, 2023, the parties executed Contract C23-157 to compensate the District Attorney for time and expenses in participating in the School Attendance Review Board ("SARB"). This includes attendance at the hearings as well as actions in preparation of hearings.

On August 14, 2024, the parties executed the first modification C24-130 to extend the terms of the agreement.

The parties now want to modify the Contract to extend the termination date and reduce the compensation amount.

Modification

The parties agree to modify the Contract effective June 30, 2025, as follows:

1. Section 2 Term, is modified by extending the term to July 1, 2026.
2. Section 3 Compensation, is modified to $10,000 per school year

COUNTY OF COLUSA

_____Date:_____
Daurice K Smith, Chair

APPROVED AS TO FORM

_____
Richard Stout, County Counsel

COLUSA COUNTY OFFICE OF EDUCATION

_____Date:_____
Michael P. West, Superintendent

ATTEST: Marcos Kropf, Clerk to the Board of Supervisors

_____
Patricia Rodriguez, Deputy

First Modification of Participation in the School Attendance Review Board

This First Modification of School Attendance Review Board contract is between Colusa County (County), a political subdivision of the State of California, and Colusa County Office of Education ("Contractor").

Background

On August 1, 2023, the parties executed Contract C23-157 to compensate the District Attorney for time and expenses in participating in the School Attendance Review Board ("SARB"). This includes attendance at the hearings as well as actions in preparation of hearings.

The parties now want to modify the Contract to extend the termination date.

Modification

The parties agree to modify the Contract effective August 1, 2024, as follows:

1. Section 2 Term, is modified by extending the term to July 1, 2025

COUNTY OF COLUSA

Date: 8/6/24
Gary J. Evans, Chairman

APPROVED AS TO FORM

Richard Stout, County Counsel

COLUSA COUNTY OFFICE OF EDUCATION

Date: 8.14.2024
Michael P. West, Superintendent

ATTEST: Wendy G. Tyler, Clerk to the Board of Supervisors

Patricia Rodriguez, Deputy

C23-157

Contract Between the District Attorneys Office County of Colusa and Colusa County Office of Education

This contract ("Contract") is between the County of Colusa ("County"), a political subdivision of the State of California and Colusa County Office of Education ("Contractor").

1. **Services to be Performed:** Contractor agrees to compensate DA for time and expenses in participating in School Attendance Review Board ("SARB"). This includes attendance at the hearings as well as actions in preparation of the hearing.

2. **Term:** This Contract shall begin on August 1, 2023 and shall continue until July 31, 2024.

3. **Compensation:** Contractor will pay the DA $20,000 per school year. Compensation will be paid in accordance with paragraph 4, Method of Payment. The compensation paid to DA may be used in part to provide for professional development. Said compensation shall cover all cost for participation in SARB.

4. **Method of Payment:** Payments shall be on an annual basis. Payment shall be at any time within 30 days of full execution of the contract.

5. **Indemnity and Liability:** Each party shall indemnify, defend, and hold the other party and its directors, officers, employees, and agents harmless against any claims of any kind, arising or alleged to arise out of the willful misconduct, negligent acts, omissions, or violations of law by the party.

6. **Controlling Law Venue**: This Contract is made in the County of Colusa, State of California. The parties specifically agree to submit to the jurisdiction of the Superior Court of California for the County of Colusa.

7. **Written Notification**: Any notice, demand, request, consent, approval, or communication that either party desires or is required to give to the other party shall be in writing and either served personally or sent prepaid, first class mail. Any such notice, demand, etc., shall be addressed to the other party at the address set forth below. Either party may change its address by notifying the other party of the change of address. Notice shall be deemed communicated within 48 hours from the time of mailing if mailed as provided in this section.

If to DA:

Colusa County District Attorney
Attention: Fiscal
310 6th Street
Colusa, CA 95932

If to Contractor:
Colusa County Office of Education
Attention: Superintendent Michael West
345 5th Street
Colusa, CA 95932

8. **Entire Contract**: This Contract constitutes the complete and exclusive statement of contract between County and Contractor. All prior written and oral communications, including correspondence, drafts, memoranda, and representations, are superseded in total by this Contract.

9. **Amendments**: This Contract may be modified or amended only by a written document executed by both Contractor and County and approved as to form by the County Counsel.

10. **Waiver**: No failure on the part of either party to exercise any right or remedy provided for by this Contract shall operate as a waiver of any other right or remedy that party may have.

11. **Execution**: This Contract may be executed in several counterparts, each of which shall constitute one and the same instrument and shall become binding upon the parties.

12. **Assignment & Subcontracting**: The parties recognize that a substantial inducement to County for entering into this Contract is the professional reputation, experience, and competence of Contractor. Assignments of any or all rights, duties or obligations of Contractor under this Contract will be permitted only with the express consent of County. Contractor shall not subcontract any portion of the work to be performed under this Contract without the written authorization of County. If County consents to such subcontract, Contractor shall be fully responsible to County for all acts or omissions of the subcontractor. Nothing in this Contract shall create any contractual relationship between County and subcontractor nor shall it create any obligation on the part of County to pay any monies due to any such subcontractor unless otherwise required by law.

13. **Termination**: This Contract may be terminated for the following reasons:

    A. Immediately for cause if either party violates any of the terms or provisions of this Contract; or

    B. By County without cause upon fifteen (15) days written notice of termination.

14. **Partial Invalidity**. If any provision of this Contract is held to be invalid, void, or unenforceable, the remainder of the provision and/or provisions shall remain in full force and effect and shall not be affected or invalidated.

COUNTY OF COLUSA

Date 8/1/23

Kent S. Boes, Board Chair

APPROVED AS TO FORM

for

Richard Stout, County Counsel

COLUSA COUNTY OFFICE OF EDUCATION

Date: 16 June 2023

Michael P. West, Superintendent

ATTEST: Wendy Tyler, Clerk of the Board of Supervisors

By for

Ann Nordyke, Deputy

Colusa County

Agenda Request Form

Item ID#: 2025-72 **Agenda Date:** 11/4/2025 **Item 8**

DISTRICT ATTORNEY

Approve a Proposal with **Advanced Document Concepts** for maintenance services and Lease Agreement with **US Bank Equipment Finance** for copier/printer lease for the District Attorney and authorize the Purchasing Agent to sign.

Detailed Description/Background of Request
The District Attorney requests approval of the proposal with Advanced Document Concepts for maintenance services and the five-year lease agreement with US Bank for the copier/printer in the District Attorney's office. This agreement will provide an updated printer/copier for the Department. The prior lease was at a cost of $455.92 per month and the new lease will be $401.98 per month, a reduction of $53.94 per month. Advanced Document Concepts provides the maintenance for the copiers/printers and US Bank Equipment Finance is the lessor.

Fiscal Impact/Funding Source
Budgeted: DA: 001-53200-516-0

Action for the Clerk
Please number contract, obtain Purchasing Agent's signature on the original documents and return to Rick Luigard in Purchasing.

Prior Board Action
None

Attachments:
1. District Attorney-Lease

usbank
EQUIPMENT FINANCE

APPLICATION NO.	AGREEMENT NO.
3245208	

Lease Agreement

Supplier:

ADVANCED Document CONCEPTS For Business

702 Nord Avenue
Chico, CA 95926
Phone: 530.893.8711
Fax: 530.893.8615

Send Account Inquiries to: 1310 Madrid Street, Suite 101 • Marshall, MN 56258 • Phone: (800) 328-5371 • Fax: (800) 328-9092
Send Payments to: P.O. Box 790448 • St. Louis, MO 63179-0448

The words "**Lessee**," "**you**" and "**your**" refer to **Customer**. The words "**Lessor**," "**we**," "**us**" and "**our**" refer to **U.S. Bank Equipment Finance, a division of U.S. Bank National Association** ("**U.S. Bank Equipment Finance**").

CUSTOMER INFORMATION

FULL LEGAL NAME			STREET ADDRESS	
Colusa County of			547 Market street, ste 110	
CITY	**STATE**	**ZIP**	**PHONE**	**FAX**
Colusa	Ca.	95932	(530) 458-0438	
BILLING NAME (IF DIFFERENT FROM ABOVE)			**BILLING STREET ADDRESS**	
CITY	**STATE**	**ZIP**	**E-MAIL**	

EQUIPMENT LOCATION (IF DIFFERENT FROM ABOVE)
District Attorneys Office - 310 6th Street, Colusa, Ca. 95932

EQUIPMENT DESCRIPTION

MAKE/MODEL/ACCESSORIES	SERIAL NO.
Kyocera TASKalfa 8353ci Color MFP	

together with all replacements, parts, repairs, additions, and accessions incorporated therein or attached thereto and any and all proceeds of the foregoing, including, without limitation, insurance recoveries.

☐ See attached Schedule A

TERM AND PAYMENT INFORMATION

60 Payments* of $ 306.00 *If you are exempt from sales tax, attach your certificate.* **plus applicable taxes*

The payment ("Payment") period is monthly unless otherwise indicated.

END OF TERM OPTIONS

You will have the following options, which you may exercise at the end of the term, provided that no event of default under this Agreement has occurred and is continuing. Fair Market Value means the value of the Equipment in continued use. Purchase all of the Equipment for its Fair Market Value, renew this Agreement, or return the Equipment.

Upon acceptance of the Equipment, THIS AGREEMENT IS NONCANCELABLE, IRREVOCABLE AND CANNOT BE TERMINATED.

LESSOR ACCEPTANCE

U.S. Bank Equipment Finance

LESSOR | SIGNATURE | TITLE | DATED

CUSTOMER ACCEPTANCE

BY SIGNING BELOW OR AUTHENTICATING AN ELECTRONIC RECORD HEREOF, YOU CERTIFY THAT YOU HAVE REVIEWED AND DO AGREE TO ALL TERMS AND CONDITIONS OF THIS AGREEMENT ON THIS PAGE AND ON PAGE 2 ATTACHED HERETO.

Colusa County of — X — 11/04/2025

CUSTOMER (as referenced above) | SIGNATURE | TITLE | DATED

94-6000508

FEDERAL TAX I.D. # | PRINT NAME

DELIVERY & ACCEPTANCE CERTIFICATE

You certify and acknowledge that all of the Equipment listed above: 1) has been received, installed and inspected; and 2) is fully operational and unconditionally accepted. Upon you signing below, your promises in this Agreement will be irrevocable and unconditional in all respects. You understand and agree that we have paid for the purchase of the Equipment from Supplier and you may contact Supplier for any warranty rights, which we transfer to you for the term of this Agreement (or until you default).

Colusa County of — X — 11/04/2025

CUSTOMER (as referenced above) | SIGNATURE | TITLE | ACCEPTANCE DATE

1. **AGREEMENT:** You agree to lease from us the goods ("Equipment") and, if applicable, finance certain software, software license(s), software components and/or professional services in connection with software (collectively, the "Financed Items," which are included in the word "Equipment" unless separately stated) from software licensor(s) and/or supplier(s) (collectively, the "Supplier"), all as described in this Agreement and in any attached schedule, addendum or amendment hereto ("Agreement"). You represent and warrant that you will use the Equipment for business purposes only. You agree to all of the terms and conditions contained in this Agreement, which, with the acceptance certification, is the entire agreement between you and us regarding the Equipment and which supersedes any purchase order, invoice, request for proposal, response or other related document. This Agreement becomes valid upon execution by us. The term shall start on the date we pay Supplier. The first Payment is due 30 days after the start of this Agreement and each Payment thereafter shall be due on the same day of each month (the "Scheduled Due Date") unless a different due date is mutually agreed to by us and you. If the parties agree to adjust the Payment due date (an "Adjusted Due Date"), in addition to all Payments and other amounts due hereunder, you will pay an interim payment in an amount equal to 1/30th of the Payment, multiplied by the number of days between the Scheduled Due Date and the Adjusted Due Date. If any provision of this Agreement is declared unenforceable, the other provisions herein shall remain in full force and effect to the fullest extent permitted by law.

2. **OWNERSHIP; PAYMENTS; TAXES AND FEES:** We own the Equipment, excluding any Financed Items. Ownership of any Financed Items shall remain with Supplier thereof. You will pay all Payments, as adjusted, when due, without notice or demand and without abatement, set-off, counterclaim or deduction of any amount whatsoever. If any part of a Payment is more than 5 days late, you agree to pay a late charge of 10% of the Payment which is late or, if less, the maximum charge allowed by law. The Payment may be adjusted proportionately upward or downward: (i) if the shipping charges or taxes differ from the estimate given to you; and/or (ii) to comply with the tax laws of the state in which the Equipment is located. You shall pay all applicable taxes, assessments and penalties related to this Agreement, whether levied or assessed on this Agreement, on us (except on our income) or you, or on the Equipment, its lease, sale, ownership, possession, use or operation. If we pay any taxes or other expenses that are owed hereunder, you agree to reimburse us when we request. You agree to pay us a yearly processing fee of up to $50 for personal property taxes we pay related to the Equipment. You agree to pay us a fee of up to $50 for filing and/or searching costs required under the Uniform Commercial Code ("UCC") or other laws. You agree to pay us an origination fee of up to $125 for all closing costs. We may apply all sums received from you to any amounts due and owed to us under the terms of this Agreement. If for any reason your check is returned for insufficient funds, you will pay us a service charge of $30 or, if less, the maximum charge allowed by law. We may make a profit on any fees, estimated tax payments and other charges paid under this Agreement.

3. **EQUIPMENT; SECURITY INTEREST:** At your expense, you shall keep the Equipment: (i) in good repair, condition and working order, in compliance with applicable laws, ordinances and manufacturers' and regulatory standards; (ii) free and clear of all liens and claims; and (iii) at your address shown on page 1, and you agree not to move it unless we agree in writing. You grant us a security interest in the Equipment to secure all amounts you owe us under this Agreement or any other agreement with us ("Other Agreements"), except amounts under Other Agreements which are secured by land and/or buildings. You authorize and ratify our filing of any financing statement(s) to show our interest. You will not change your name, state of organization, headquarters or residence without providing prior written notice to us. You will notify us within 30 days if your state of organization revokes or terminates your existence.

4. **INSURANCE; COLLATERAL PROTECTION; INDEMNITY; LOSS OR DAMAGE:** You agree to keep the Equipment fully insured against all risk, with us named as lender's loss payee, in an amount not less than the full replacement value of the Equipment until this Agreement is terminated. You also agree to maintain commercial general liability insurance with such coverage and from such insurance carrier as shall be satisfactory to us and to include us as an additional insured on the policy. You will provide written notice to us within 10 days of any modification or cancellation of your insurance policy(s). You agree to provide us certificates or other evidence of insurance acceptable to us. If you do not provide us with acceptable evidence of property insurance within 30 days after the start of this Agreement, we may, at our sole discretion, charge you a monthly property damage surcharge of up to .0035 of the Equipment cost as a result of our credit risk and administrative and other costs, as would be further described on a letter from us to you. We may make a profit on this program. NOTHING IN THIS PARAGRAPH WILL RELIEVE YOU OF RESPONSIBILITY FOR LIABILITY INSURANCE ON THE EQUIPMENT. We are not responsible for, and you agree to hold us harmless and reimburse us for and to defend on our behalf against, any claim for any loss, expense, liability or injury caused by or in any way related to delivery, installation, possession, ownership, leasing, manufacture, use, condition, inspection, removal, return or storage of the Equipment. All indemnities will survive the expiration or termination of this Agreement. You are responsible for any loss, theft, destruction or damage to the Equipment ("Loss"), regardless of cause, whether or not insured. You agree to promptly notify us in writing of any Loss. If a Loss occurs and we have not otherwise agreed in writing, you will promptly pay to us the unpaid balance of this Agreement, including any future Payments to the end of the term plus the anticipated residual value of the Equipment, both discounted to present value at 2%. Any proceeds of insurance will be paid to us and credited against the Loss. You authorize us to sign on your behalf and appoint us as your attorney-in-fact to endorse in your name any insurance drafts or checks issued due to a Loss.

5. **ASSIGNMENT: YOU SHALL NOT SELL, TRANSFER, ASSIGN, ENCUMBER, PLEDGE OR SUBLEASE THE EQUIPMENT OR THIS AGREEMENT, without our prior written consent.** You shall not consolidate or merge with or into any other entity, distribute, sell or dispose of all or any substantial portion of your assets other than in the ordinary course of business, without our prior written consent, and the surviving, or successor entity or the transferee of such assets, as the case may be, shall assume all of your obligations under this Agreement by a written instrument acceptable to us. No event shall occur which causes or results in a transfer of majority ownership of you while any obligations are outstanding hereunder. We may sell, assign, or transfer this Agreement without notice to or consent from you. You agree that if we sell, assign or transfer this Agreement, our assignee will have the same rights and benefits that we have now and will not have to perform any of our obligations. **You agree that our assignee will not be subject to any claims, defenses, or offsets that you may have against us.** This Agreement shall be binding on and inure to the benefit of the parties hereto and their respective successors and assigns.

6. **DEFAULT AND REMEDIES:** You will be in default if: (i) you do not pay any Payment or other sum due to us or you fail to perform in accordance with the covenants, terms and conditions of this Agreement or any other agreement with us or any of our affiliates or fail to perform or pay under any material agreement with any other entity; (ii) you make or have made any false statement or misrepresentation to us; (iii) you or any guarantor dies, dissolves, liquidates, terminates existence or is in bankruptcy; (iv) you or any guarantor suffers a material adverse change in its financial, business or operating condition; or (v) any guarantor defaults under any guaranty for this Agreement. If you are ever in default, at our option, we can cancel this Agreement and require that you pay the unpaid balance of this Agreement, including any future Payments to the end of term plus the anticipated residual value of the Equipment, both discounted to present value at 2%. We may recover default interest on any unpaid amount at the rate of 12% per year. Concurrently and cumulatively, we may also use any remedies available to us under the UCC and any other law and we may require that you immediately stop using any Financed Items. If we take possession of the Equipment, you agree to pay the costs of repossession, moving, storage, repair and sale. The net proceeds of the sale of any Equipment will be credited against what you owe us under this Agreement and you will be responsible for any deficiency. In the event of any dispute or enforcement of our rights under this Agreement or any related agreement, you agree to pay our reasonable attorneys' fees (including any incurred before or at trial, on appeal or in any other proceeding), actual court costs and any other collection costs, including any collection agency fee. WE SHALL NOT BE RESPONSIBLE TO PAY YOU ANY CONSEQUENTIAL, INDIRECT OR INCIDENTAL DAMAGES FOR ANY DEFAULT, ACT OR OMISSION BY ANYONE. Any delay or failure to enforce our rights under this Agreement will not prevent us from enforcing any rights at a later time. You agree that this Agreement is a "Finance Lease" as defined by Article 2A of the UCC and your rights and remedies are governed exclusively by this Agreement. You waive all rights under sections 2A-508 through 522 of the UCC. If interest is charged or collected in excess of the maximum lawful rate, we will refund such excess to you, which will be your sole remedy.

7. **INSPECTIONS AND REPORTS:** We have the right, at any reasonable time, to inspect the Equipment and any documents relating to its installation, use, maintenance and repair. Within 30 days after our request (or such longer period as provided herein), you will deliver all requested information (including tax returns) which we deem reasonably necessary to determine your current financial condition and faithful performance of the terms hereof. This may include: (i) compiled, reviewed or audited annual financial statements (including, without limitation, a balance sheet, a statement of income, a statement of cash flow, a statement of changes in equity and notes to financial statements) within 120 days after your fiscal year end, and (ii) management-prepared interim financial statements within 45 days after the requested reporting period(s). Annual statements shall set forth the corresponding figures for the prior fiscal year in comparative form, all in reasonable detail without any qualification or exception deemed material by us. Unless otherwise accepted by us, each financial statement shall be prepared in accordance with generally accepted accounting principles consistently applied and shall fairly and accurately present your financial condition and results of operations for the period to which it pertains. You authorize us to obtain credit bureau reports for credit and collection purposes and to share them with our affiliates and agents.

8. **END OF TERM:** Unless the purchase option is $1.00, at the end of the initial term, this Agreement shall renew for successive month-to-month renewal term(s) under the same terms hereof unless you send us written notice between 90 and 150 days before the end of the initial term or at least 30 days before the end of any renewal term that you want to purchase or return the Equipment, and you timely purchase or return the Equipment. You shall continue making Payments and paying all other amounts due until the Equipment is purchased or returned. As long as you have given us the required written notice, if you do not purchase the Equipment, you will return all of the Equipment to a location we specify, at your expense, in retail re-saleable condition, full working order and complete repair. At the end of the term or upon repossession of the Equipment after a default, you agree to pay us a minimum return fee of $250, which will cover up to 10 units of returned Equipment and will not be prorated, and in addition, a supplemental return fee of up to $50 per each unit of returned Equipment in excess of 10 units (collectively, the "Return Fee"). If, in our sole discretion, we allow you to return any Equipment prior to the end of the term, you shall pay us the Return Fee each time you return Equipment. YOU ARE SOLELY RESPONSIBLE FOR REMOVING ANY DATA THAT MAY RESIDE IN THE EQUIPMENT, INCLUDING BUT NOT LIMITED TO HARD DRIVES, DISK DRIVES OR ANY OTHER FORM OF MEMORY.

9. **USA PATRIOT ACT NOTICE; ANTI-TERRORISM AND ANTI-CORRUPTION COMPLIANCE:** To help the government fight the funding of terrorism and money laundering activities, federal law requires all financial institutions to obtain, verify, and record information that identifies each customer who opens an account. When you enter into a transaction with us, we ask for your business name, address and other information that will allow us to identify you. We may also ask to see other documents that substantiate your business identity. You and any other person who you control, own a controlling interest in, or who owns a controlling interest in or otherwise controls you in any manner ("Representatives") are and will remain in full compliance with all laws, regulations and government guidance concerning foreign asset control, trade sanctions, embargoes, and the prevention and detection of money laundering, bribery, corruption, and terrorism, and neither you nor any of your Representatives is or will be listed in any Sanctions-related list of designated persons maintained by the U.S. Department of Treasury's Office of Foreign Assets Control or successor or the U.S. Department of State. You shall, and shall cause any Representative to, provide such information and take such actions as are reasonably requested by us in order to assist us in maintaining compliance with anti-money laundering laws and regulations.

10. **MISCELLANEOUS:** Unless otherwise stated in an addendum hereto, the parties agree that: (i) this Agreement and any related documents hereto may be authenticated by electronic means; (ii) the "original" of this Agreement shall be the copy that bears your manual, facsimile, scanned or electronic signature and that also bears our manually or electronically signed signature and is held or controlled by us; and (iii) to the extent this Agreement constitutes chattel paper (as defined by the UCC), a security interest may only be created in the original. You agree not to raise as a defense to the enforcement of this Agreement or any related documents that you or we executed or authenticated such documents by electronic or digital means or that you used facsimile or other electronic means to transmit your signature on such documents. Notwithstanding anything to the contrary herein, we reserve the right to require you to sign this Agreement or any related documents hereto manually and to send to us the manually signed, duly executed documents via overnight courier on the same day that you send us the facsimile, scanned or electronic transmission of the documents. You agree to execute any further documents that we may request to carry out the intents and purposes of this Agreement. Whenever our consent is required, we may withhold or condition such consent in our sole discretion, except as otherwise expressly stated herein. From time to time, Supplier may extend to us payment terms for Equipment financed under this Agreement that are more favorable than what has been quoted to you or the general public, and we may provide Supplier information regarding this Agreement if Supplier has assigned or referred it to us. All notices shall be mailed or delivered by facsimile transmission or overnight courier to the respective parties at the addresses shown on this Agreement or such other address as a party may provide in writing from time to time. By providing us with a telephone number for a cellular phone or other wireless device, including a number that you later convert to a cellular number, you are expressly consenting to receiving communications, including but not limited to prerecorded or artificial voice message calls, text messages, and calls made by an automatic telephone dialing system, from us and our affiliates and agents at that number. This express consent applies to each such telephone number that you provide to us now or in the future and permits such calls for non-marketing purposes. Calls and messages may incur access fees from your cellular provider. You authorize us to make non-material amendments (including completing and conforming the description of the Equipment) on any document in connection with this Agreement. Unless stated otherwise herein, all other modifications to this Agreement must be in writing and signed by each party or in a duly authenticated electronic record. This Agreement may not be modified by course of performance.

11. **WARRANTY DISCLAIMERS:** WE ARE LEASING THE EQUIPMENT TO YOU "AS-IS." YOU HAVE SELECTED SUPPLIER AND THE EQUIPMENT BASED UPON YOUR OWN JUDGMENT. WE DO NOT TAKE RESPONSIBILITY FOR THE INSTALLATION OR PERFORMANCE OF THE EQUIPMENT. SUPPLIER IS NOT AN AGENT OF OURS AND WE ARE NOT AN AGENT OF SUPPLIER, AND NOTHING SUPPLIER STATES OR DOES CAN AFFECT YOUR OBLIGATIONS HEREUNDER. **YOU WILL MAKE ALL PAYMENTS UNDER THIS AGREEMENT REGARDLESS OF ANY CLAIM OR COMPLAINT AGAINST ANY SUPPLIER, LICENSOR OR MANUFACTURER, AND ANY FAILURE OF A SERVICE PROVIDER TO PROVIDE SERVICES WILL NOT EXCUSE YOUR OBLIGATIONS TO US UNDER THIS AGREEMENT. WE MAKE NO WARRANTIES, EXPRESS OR IMPLIED, OF, AND TAKE ABSOLUTELY NO RESPONSIBILITY FOR, MERCHANTABILITY, FITNESS FOR ANY PARTICULAR PURPOSE, CONDITION, QUALITY, ADEQUACY, TITLE, DATA ACCURACY, SYSTEM INTEGRATION, FUNCTION, DEFECTS, INFRINGEMENT OR ANY OTHER ISSUE IN REGARD TO THE EQUIPMENT, ANY ASSOCIATED SOFTWARE AND ANY FINANCED ITEMS.** SO LONG AS YOU ARE NOT IN DEFAULT UNDER THIS AGREEMENT, WE ASSIGN TO YOU ANY WARRANTIES IN THE EQUIPMENT GIVEN TO US.

12. **LAW; JURY WAIVER:** This Agreement will be governed by and construed in accordance with Minnesota law. You consent to jurisdiction and venue of any state or federal court in Minnesota and waive the defense of inconvenient forum. For any action arising out of or relating to this Agreement or the Equipment, **BOTH PARTIES WAIVE ALL RIGHTS TO A TRIAL BY JURY**.

usbank
EQUIPMENT FINANCE

STATE AND LOCAL GOVERNMENT ADDENDUM

AGREEMENT # 3245208

Addendum to Agreement # 3245208 and any future supplements/schedules thereto, between Colusa County of , as Customer and U.S. Bank Equipment Finance, a division of U.S. Bank National Association ("U.S. Bank Equipment Finance"), as Lessor. The words "you" and "your" refer to Customer. The words "we" and "us" refer to Lessor.

1. The parties wish to amend the above-referenced Agreement by adding the following language:

REPRESENTATIONS AND WARRANTIES OF CUSTOMER: You hereby represent and warrant to us that: (i) you have been duly authorized under the Constitution and laws of the applicable jurisdiction and by a resolution or other authority of your governing body to execute and deliver this Agreement and to carry out your obligations hereunder; (ii) all legal requirements have been met, and procedures have been followed, including public bidding, in order to ensure the enforceability of this Agreement; (iii) this Agreement is in compliance with all laws applicable to you, including any debt limitations or limitations on interest rates or finance charges; (iv) the Equipment will be used by you only for essential governmental or proprietary functions of you consistent with the scope of your authority, will not be used in a trade or business of any person or entity, by the federal government or for any personal, family or household use, and your need for the Equipment is not expected to diminish during the term of this Agreement; (v) you have funds available to pay Payments until the end of your current appropriation period, and you intend to request funds to make Payments in each appropriation period, from now until the end of the term of this Agreement; and (vi) your exact legal name is as set forth on page one of this Agreement.

INITIAL TERM AND RENEWAL TERM(S): The term of the Agreement consists of an initial term beginning on the date we pay Supplier and ending at the end of your fiscal year in which we pay Supplier, and a series of renewal terms, each co-extensive with your fiscal year. Except to the extent required by applicable law, if you do not exercise your right to terminate the Agreement under the Non-Appropriation or Renewal paragraph as of the end of any fiscal year, the Agreement will be deemed automatically renewed for the next succeeding renewal term.

An election by you to terminate the Agreement under the Non-Appropriation or Renewal paragraph is not a default.

Notwithstanding anything to the contrary set forth in the Agreement, if we cancel the Agreement following a default by you, we may require that you pay the unpaid balance of Payments under the Agreement through the end of your then-current fiscal year, but we may not require you to pay future Payments due beyond that fiscal year or the anticipated residual value of the Equipment. If we sell the Equipment following a default by you, you will not be responsible for a deficiency, except to the extent of our costs of repossession, moving, storage, repair and sale, and our attorneys' fees and costs.

NON-APPROPRIATION OR RENEWAL: If either sufficient funds are not appropriated to make Payments or any other amounts due under this Agreement or (to the extent required by applicable law) this Agreement is not renewed either automatically or by mutual ratification, this Agreement shall terminate and you shall not be obligated to make Payments under this Agreement beyond the then-current fiscal year for which funds have been appropriated. Upon such an event, you shall, no later than the end of the fiscal year for which Payments have been appropriated or the term of this Agreement has been renewed, deliver possession of the Equipment to us. If you fail to deliver possession of the Equipment to us, the termination shall nevertheless be effective but you shall be responsible, to the extent permitted by law and legally available funds, for the payment of damages in an amount equal to the portion of Payments thereafter coming due that is attributable to the number of days after the termination during which you fail to deliver possession and for any other loss suffered by us as a result of your failure to deliver possession as required. You shall notify us in writing within seven days after (i) your failure to appropriate funds sufficient for the payment of the Payments or (ii) to the extent required by applicable law, (a) this Agreement is not renewed or (b) this Agreement is renewed by you (in which event this Agreement shall be mutually ratified and renewed), provided that your failure to give any such notice under clause (i) or (ii) of this sentence shall not operate to extend this Agreement or result in any liability to you.

SUPPLEMENTS; SEPARATE FINANCINGS: To the extent applicable, in the event that the parties hereafter mutually agree to execute and deliver any supplement or schedule ("Supplement") under the above-referenced Agreement, such Supplement, as it incorporates the terms and conditions of the Agreement, shall be a separate financing distinct from the Agreement or other Supplements thereto. Without limiting the foregoing, upon the occurrence of an event of default or a non-appropriation event with respect to the Agreement or a Supplement (each, a separate "Contract"), as applicable, we shall have the rights and remedies specified in the Agreement with respect to the Equipment financed and the Payments payable under such Contract, and we shall have no rights or remedies with respect to Equipment financed or Payments payable under any other Contract unless an event of default or non-appropriation event has also occurred under such other Contract.

2. The parties wish to amend the above-referenced Agreement by restating certain language as follows:

Any provision in the Agreement stating that you shall indemnify and hold us harmless is hereby amended and restated as follows: "You shall not be required to indemnify or hold us harmless against liabilities arising from this Agreement. However, as between you and us, and to the extent permitted by law and legally available funds, you are responsible for and shall bear the risk of loss for, shall pay directly, and shall defend against any and all claims, liabilities, proceedings, actions, expenses, damages or losses arising under or related to the Equipment, including, but not limited to, the possession, ownership, lease, use or operation thereof, except that you shall not bear the risk of loss of, nor pay for, any claims, liabilities, proceedings, actions, expenses, damages or losses that arise directly from events occurring after you have surrendered possession of the Equipment in accordance with the terms of this Agreement to us or that arise directly from our gross negligence or willful misconduct."

Any provision in the Agreement stating that the Agreement is governed by a particular state's laws and you consent to such jurisdiction and venue is hereby amended and restated as follows: "This Agreement will be governed by and construed in accordance with the laws of the state where you are located. You consent to jurisdiction and venue of any state or federal court in such state and waive the defense of inconvenient forum."

Any provision in the Agreement stating this Agreement supersedes any invoice and/or purchase order is hereby amended and restated as follows: "You agree that the terms and conditions contained in this Agreement, which, with the acceptance certification, is the entire agreement between you and us regarding the Equipment and which supersedes any purchase order, invoice, request for proposal, response or other related document."

Any provision in the Agreement stating that this Agreement shall automatically renew unless the Equipment is purchased, returned or a notice requirement is satisfied is hereby amended and restated as follows: "Unless the purchase option is $1.00 or $101.00, you agree to send us written notice at least 30 days before the end of the final renewal term that you want to purchase or return the Equipment, and you agree to so purchase or return the Equipment not later than the end of the final renewal term. If you fail to so purchase or return the Equipment at or before the end of the final renewal term, you shall be a holdover tenant with respect to this Agreement and the Equipment, and this Agreement shall renew on a month-to-month basis under the same terms hereof until the Equipment has been purchased or returned."

Any provision in the Agreement stating that we may assign this Agreement is hereby amended and restated as follows: "We may sell, assign, or transfer this Agreement without notice to or consent from you, and you waive any right you may have to such notice or consent."

Any provision in the Agreement stating that you grant us a security interest in the Equipment to secure all amounts owed to us under any agreement is hereby amended and restated as follows: "To the extent permitted by law, you grant us a security interest in the Equipment to secure all amounts you owe us under this Agreement and any supplements hereto. You authorize and ratify our filing of any financing statement(s) and the naming of us on any vehicle title(s) to show our interest."

Any provision in the Agreement stating that a default by you under any agreement with our affiliates or other lenders shall be an event of default under the Agreement

is hereby amended and restated as follows: "You will be in default if: (i) you do not pay any Payment or other sum due to us under this Agreement when due or you fail to perform in accordance with the covenants, terms and conditions of this Agreement; (ii) you make or have made any false statement or misrepresentation to us; or (iii) you dissolve, liquidate, terminate your existence or are in bankruptcy.

Any provision in the Agreement stating that you shall pay our attorneys' fees is hereby amended and restated as follows: "In the event of any dispute or enforcement of rights under this Agreement or any related agreement, you agree to pay, to the extent permitted by law and to the extent of legally available funds, our reasonable attorneys' fees (including any incurred before or at trial, on appeal or in any other proceeding), actual court costs and any other collection costs, including any collection agency fee."

Any provision in the Agreement requiring you to pay amounts due under the Agreement upon the occurrence of a default, failure to appropriate funds or failure to renew the Agreement is hereby amended to limit such requirement to the extent permitted by law and legally available funds.

3. If your end-of-term option is the purchase of all Equipment for $1.00 or $101.00, the following applies: Unless otherwise required by law, upon your acceptance of the Equipment, title to the Equipment shall be in your name, subject to our interest under this Agreement.

4. With respect to any "Financed Items," the following provisions shall be applicable to such Financed Items:

This Addendum concerns the granting to you of certain software and/or software license(s) ("Licensed Software"), the purchase by you of certain software components, including but not limited to, software maintenance and/or support ("Products") and/or the purchase by you of certain implementation, integration, training, technical consulting and/or professional services in connection with software ("Services") (collectively, the "Financed Items") from software licensor(s) and/or supplier(s) (collectively, the "Supplier"), all as further described in the agreement(s) between you and Supplier (collectively, the "Product Agreement"). For essential governmental purposes only, you have requested and we have agreed that instead of you paying the fees pursuant to the Product Agreement to Supplier for the Financed Items, we will satisfy your obligation to pay such fees to Supplier, and in consideration thereof, you shall repay the sums advanced by us to Supplier by promptly making certain installment payments to us, which are included in the Payments set forth in the Agreement.

To the extent permitted by law, you grant us a security interest in the license(s), including without limitation, all of your rights in the Licensed Software granted thereunder, the Products, all rights to payment under the Product Agreement, the Financed Items, and all proceeds of the foregoing to secure all amounts you owe us under this Agreement. You authorize and ratify our filing of any financing statement(s) to show our interest.

Ownership of any Licensed Software shall remain with Supplier thereof. All Financed Items shall be provided by a Supplier unrelated to us, and your rights with respect to such Financed Items shall be governed by the Product Agreement between you and Supplier, which shall not be affected by this Agreement. IN NO EVENT SHALL WE HAVE ANY OBLIGATION TO PROVIDE ANY FINANCED ITEMS, AND ANY FAILURE OF SUPPLIER TO PROVIDE ANY FINANCED ITEMS SHALL NOT EXCUSE YOUR OBLIGATIONS TO US IN ANY WAY. YOU HAVE SELECTED SUPPLIER AND THE FINANCED ITEMS BASED UPON YOUR OWN JUDGMENT. WE DO NOT TAKE RESPONSIBILITY FOR THE INSTALLATION OR PERFORMANCE OF THE FINANCED ITEMS. SUPPLIER IS NOT AN AGENT OF OURS AND WE ARE NOT AN AGENT OF SUPPLIER, AND NOTHING SUPPLIER STATES OR DOES CAN AFFECT YOUR OBLIGATIONS HEREUNDER. **YOU WILL MAKE ALL PAYMENTS UNDER THIS AGREEMENT REGARDLESS OF ANY CLAIM OR COMPLAINT AGAINST ANY SUPPLIER, LICENSOR OR MANUFACTURER, AND ANY FAILURE OF A SERVICE PROVIDER TO PROVIDE SERVICES WILL NOT EXCUSE YOUR OBLIGATIONS TO US UNDER THIS AGREEMENT. WE MAKE NO WARRANTIES, EXPRESS OR IMPLIED, AS TO THE FINANCED ITEMS COVERED BY THE PRODUCT AGREEMENT AND TAKE ABSOLUTELY NO RESPONSIBILITY FOR MERCHANTABILITY OR FITNESS FOR ANY PARTICULAR PURPOSE OR AS TO ANY PATENT, TRADEMARK OR COPYRIGHT INFRINGEMENT, CONDITION, QUALITY, ADEQUACY, TITLE, DATA ACCURACY, SYSTEM INTEGRATION, FUNCTION, DEFECTS OR ANY OTHER ISSUE IN REGARD TO THE FINANCED ITEMS.** YOU HEREBY WAIVE ANY CLAIM (INCLUDING ANY CLAIM BASED ON STRICT LIABILITY OR ABSOLUTE LIABILITY IN TORT) THAT YOU MAY HAVE AGAINST US FOR ANY LOSS, DAMAGE (INCLUDING, WITHOUT LIMITATION, LOSS OF PROFITS, LOSS OF DATA OR ANY OTHER DAMAGES) OR EXPENSE CAUSED BY THE FINANCED ITEMS COVERED BY THE PRODUCT AGREEMENT OR A TERMINATION OF THE FINANCED ITEMS PURSUANT TO AN EVENT OF DEFAULT, EVEN IF WE HAVE BEEN ADVISED OF THE POSSIBILITY OF SUCH DAMAGE, LOSS, EXPENSE OR COST.

The following shall be additional events of default under the Agreement: (i) you fail to perform in accordance with the covenants, terms and conditions of the Product Agreement, or (ii) the Product Agreement is terminated, suspended, materially restricted or limited.

The following shall be additional remedies we have for your default under the Agreement: We shall have the right to: (a) cause the termination of the Financed Items and you irrevocably consent to such termination of the Financed Items by Supplier; and (b) require you to immediately stop using the Financed Items (regardless of whether you are in default under the Product Agreement) and you shall, at our option, either deliver to us a certification executed by a duly authorized officer certifying that you have ceased use of the Financed Items or deliver the Financed Items to a location designated by us. In the event you are entitled to transfer the right to use the Financed Items to any third party, you hereby agree to transfer any such right to use the Financed Items to any third party selected by us and acknowledge that you shall have no right to fees payable by any third party in connection with such transfer. However, we shall not be required to mitigate our damages caused by a default by transferring any Financed Items to a third party.

By signing this Addendum, Customer acknowledges the applicable changes noted above are incorporated by reference into the Agreement. In all other respects, the terms and conditions of the Agreement remain in full force and effect and remain binding on Customer. In the event of any conflict between the terms and conditions of the Agreement and this Addendum, the terms and conditions of this Addendum shall control. Customer has caused this Addendum to be executed by its duly authorized officer as of the date below.

U.S. Bank Equipment Finance	**Colusa County of**
Lessor	Customer
	X
Signature	Signature
	11/04/2025
Title Date	Title Date

NOTE: CAPITALIZED TERMS IN THIS DOCUMENT ARE DEFINED AS IN THE AGREEMENT, UNLESS SPECIFICALLY STATED OTHERWISE.

usbank
EQUIPMENT FINANCE

CALIFORNIA JUDICIAL REFERENCE ADDENDUM

AGREEMENT # 3245208

Addendum to Agreement # and any future supplements/schedules thereto, between Colusa County of, as Customer and U.S. Bank Equipment Finance, a division of U.S. Bank National Association ("U.S. Bank Equipment Finance"), as Lessor/Secured Party ("Agreement"). The words "you" and "your" refer to Customer. The words "we," "us" and "our" refer to Lessor/Secured Party.

The parties wish to amend the above-referenced Agreement by adding the following language:

1. Any and all disputes, claims and controversies arising out of, connected with or relating to the Agreement or the transactions contemplated thereby (individually, a "Dispute") that are brought before a forum in which pre-dispute waivers of the right to trial by jury are invalid under applicable law shall be subject to the terms contained in this Addendum in lieu of the jury trial waiver otherwise provided in the Agreement. Disputes may include, without limitation, tort claims, counterclaims, claims brought as class actions, claims arising from schedules, supplements, exhibits or other documents to the Agreement executed in the future, disputes as to whether a matter is subject to judicial reference, or claims concerning any aspect of the past, present or future relationships arising out of or connected with the Agreement.
2. Any and all Disputes shall be heard by a referee and resolved by judicial reference pursuant to California Code of Civil Procedure ("CCCP") §§ 638 et seq. The referee shall be a retired California state court judge or an attorney licensed to practice law in the State of California with at least 10 years' experience practicing commercial law. The parties shall not seek to appoint a referee that may be disqualified pursuant to CCCP §641 or 641.2 without the prior written consent of all parties. If the parties are unable to agree upon a referee within 10 calendar days after one party serves a written notice of intent for judicial reference upon the other parties, then the referee will be selected by the court in accordance with CCCP § 640(b).
3. The referee shall render a written statement of decision and shall conduct the proceedings in accordance with the CCCP, the Rules of Court, and the California Evidence Code, except as otherwise specifically agreed by the parties and approved by the referee. The referee's statement of decision shall set forth findings of fact and conclusions of law. The decision of the referee shall be entered as a judgment in the court in accordance with the provisions of CCCP §§644 and 645. The decision of the referee shall be appealable to the same extent and in the same manner that such decision would be appealable if rendered by a judge of the superior court.
4. Notwithstanding the preceding agreement to submit Disputes to a judicial referee, the parties preserve, without diminution, certain rights and remedies at law or equity and under the Agreement that such parties may employ or exercise freely, either alone or in conjunction with or during a Dispute. Each party shall have and hereby reserves the right to proceed in any court of proper jurisdiction or by self-help to exercise or prosecute the following remedies, as applicable: (A) all rights to foreclose against any real or personal property or other security by exercising a power of sale granted in the Agreement or under applicable law or by judicial foreclosure and sale, including a proceeding to confirm the sale, (B) all rights of self-help including peaceful occupation of property and collection of rents, setoff, and peaceful possession of property, (C) obtaining provisional or ancillary remedies including injunctive relief, sequestration, garnishment, attachment, appointment of receiver and in filing an involuntary bankruptcy proceeding, and (D) when applicable, a judgment by confession of judgment. Preservation of these remedies does not limit the power of a judicial referee to grant similar remedies that may be requested by a party in a Dispute. No provision in the Agreement regarding submission to jurisdiction and/or venue in any court is intended or shall be construed to be in derogation of the provisions in this Addendum for judicial reference of any Dispute. The parties do not waive any applicable federal or state substantive law except as provided herein.
5. If a Dispute includes multiple claims, some of which are found not subject to this Addendum, the parties shall stay the proceedings of the claims not subject to this Addendum until all other claims are resolved in accordance with this Addendum. If there are Disputes by or against multiple parties, some of which are not subject to this Addendum, the parties shall sever the Disputes subject to this Addendum and resolve them in accordance with this Addendum.
6. During the pendency of any Dispute that is submitted to judicial reference in accordance with this Addendum, each of the parties to such Dispute shall bear equal shares of the fees charged and costs incurred by the referee in performing the services described in this Addendum. The compensation of the referee shall not exceed the prevailing rate for like services. The prevailing party shall be entitled to reasonable court costs and legal fees, including customary attorneys' fees, expert witness fees, paralegal fees, the fees of the referee and other reasonable costs and disbursements charged to the party by its counsel, in such amount as is determined by the referee.
7. In the event of any challenge to the legality or enforceability of this Addendum, the prevailing party shall be entitled to recover the costs and expenses from the non-prevailing party, including reasonable attorneys' fees, incurred by it in connection therewith.
8. THIS ADDENDUM CONSTITUTES A "REFERENCE AGREEMENT" BETWEEN THE PARTIES WITHIN THE MEANING OF AND FOR PURPOSES OF CCCP § 638.

By signing this Addendum, Customer acknowledges the above changes to the Agreement and authorizes Lessor/Secured Party to make such changes. In the event of any conflict between this Addendum and the Agreement, this Addendum shall prevail. In all other respects, the terms and conditions of the Agreement remain in full force and effect and remain binding on Customer. This Addendum may be executed in multiple counterparts, each of which shall constitute an original, but all of which, when taken together, shall constitute one and the same agreement.

U.S. Bank Equipment Finance		**Colusa County of**	
Lessor/Secured Party		Customer	
		X	
Signature		Signature	
Title	Date	Title	Date

NOTE: CAPITALIZED TERMS IN THIS DOCUMENT ARE DEFINED AS IN THE AGREEMENT, UNLESS SPECIFICALLY STATED OTHERWISE.

A595 REV 10/19

Colusa County

Agenda Request Form

Item ID#: 2025-77 **Agenda Date:** 11/4/2025 **Item 9**

SHERIFF/CORONER

Approve Contract with **Woida Enterprises Inc., dba Arrow Fencing** for the Sheriff's Office Fencing Project.

Detailed Description/Background of Request
To secure both the existing Sheriff's Office and the newly constructed Detention Facility at 929 Bridge Street, the Sheriff's Office determined that perimeter fencing is necessary to restrict unauthorized access, safeguard detainees, and protect staff, visitors, and the public. Purchasing issued a formal Request for Proposals (RFP) on August 12, 2025 with deadline of September 12, 2025.

The project includes approximately 1,600 linear feet of chain-link fencing, five vehicle cantilever slide gates (four motorized; one manual), three pedestrian gates, automation, access control, integration of Fire Department Knox Boxes and dispatch override for authorized entry.

Eight proposals were received. Cost proposals were submitted in a separate sealed envelope and held until completion of the initial technical review. Assistant Sheriff, Assistant CAO and Sheriff Lieutenant reviewed the proposals. The evaluation used a two-stage process:

Stage 1: Written proposals were scored on technical approach, qualifications/experience and references, schedule/capacity to meet the March 6, 2026 substantial-completion date, and RFP compliance.

Stage 2: The top three highest-scoring firms advanced to cost evaluation. The top three scoring firms were as follows:

Woida Enterprises Inc., dba Arrow Fencing
CR Fence Company Inc., dba Humboldt Fence Company
Ranch Fence, Inc.

Following evaluation, Woida Enterprises Inc., dba Arrow Fencing received the highest combined score as the most advantageous and responsive proposal with competitive pricing.

Staff recommends approval of the contract with Woida Enterprises Inc., dba Arrow Fencing for design, procurement, and installation of perimeter security fencing and automated access control systems at the Sheriff's Office, in an amount not to exceed

$480,000.

Fiscal Impact/Funding Source
Project will be funded with Homeland Security Grant.

Action for the Clerk
Please register the project with DIR, number contract, obtain signatures and forward to:

Arrow Fencing
PO Box 385
Calpella, Ca, 95418

Prior Board Action
RFP documents were approved by the Board on August 12, 2025.

Attachments:
1. Contract_Arrow Fencing
2. Attachment B_Cost Proposal
3. Attachment C_Fence Layout
4. Proposal Woida Enterprises Inc dba Arrow Fencxing

Fencing Contract

This public works construction contract ("Contract") is between the County of Colusa ("County"), a political subdivision of the State of California and Woida Enterprises Inc., dba Arrow Fencing ("Contractor"), a California Corporation. This is a public works contract subject to Department of Industrial Relations registration, and payment of prevailing wage.

1. **Services to be Performed:** Contractor agrees at its own expense to furnish all equipment, labor and materials necessary to provide County with design, procurement and installation for security fencing located at 929 Bridge St., Colusa, California as more specifically detailed in Attachment "A." Additionally, all terms and conditions of the Request for Proposals (RFP) and all documents submitted in response to the RFB are incorporated into the terms and conditions of this contract.

2. **Term:** The project will commence upon issuance of a Notice to Proceed. All work under this contract shall be completed no later than March 6, 2026.

3. **Compensation:** County will pay Contractor compensation not to exceed $480,000, as provided for in Attachment "B." Compensation will be paid in accordance with paragraph 4, Method of Payment.

    A. **Retention for Contracts that Exceed $5,000:** Pursuant to California Public Contract Code section 9203(a), for public works contracts that exceed $5,000, an amount of 5% shall be withheld from the invoices submitted by the Contractor as retention money to be utilized in case of default or defective materials, equipment, supplies, work or service not rectified by the Contractor. The retention money shall be paid over to the Contractor upon the receipt of a Certificate of Completion.

4. **Method of Payment:** At the conclusion of the job, Contractor shall provide County with an invoice for the services and lump sum bid. Upon receipt of an invoice, County shall process payment to Contractor as provided for by County's established policies and procedures, and payment will be issued accordingly for undisputed invoices.

    A. **Invoices shall:**
        1) Be prepared on Contractor's letterhead.
        2) Bear Contractor's name as shown on the contract.
        3) Bear the contract number.
        4) Itemize the costs incurred.
        5) Include a summary of the services provided.
        6) Be signed by an authorized official, employee, or agent certifying that the claim represents actual expenses for the services performed under this Contract.

5. **Professional Ability of Contractor and Standards of Performance:** Contractor represents that it is qualified and licensed to perform the services to be done as required in this Contract. County relies upon the representations of Contractor regarding professional training, licensing, and ability to perform the services as a material inducement to enter into this Contract.

    A. Services shall be provided by Contractor without the advice, control or supervision of County. Contractor shall have sole discretion and control of Contractor's services and the manner in which they are performed.

B. Acceptance of work or payment of invoice by County does not operate to release Contractor from any responsibility to perform work to professional standards.

C. Contractor shall provide properly skilled professional and technical personnel to perform all services under this Contract.

6. **Contractor's Books and Records:** Contractor shall maintain any and all ledgers, books of account, invoices, vouchers, canceled checks, and other records or documents evidencing or relating to charges for services, or expenditures and disbursements charged to County for a minimum period of 5 years, or for any longer period required by law, following audit, or from the date of final payment to Contractor under this Contract, whichever is later.

    A. Contractor shall maintain all documents and records which demonstrate performance under this Contract for a minimum period of 5 years, or for any longer period required by law, from the date of termination or completion of this Contract.

    B. Any records or documents required to be maintained pursuant to this Contract shall be made available for inspection or audit at any time during regular business hours, upon written request by County Counsel or other designated representative of County. Copies of such documents shall be provided to County for inspection at the office of the requesting county officer unless it is impractical to do so; in which case the records shall be made available at Contractor's address indicated for receipt of notices in this Contract.

    C. Where County has reason to believe that such records or documents may be lost or discarded due to dissolution, disbandment, or termination of Contractor's business, County may, on written request, require that custody of the records be given to County and that the records and documents be maintained by County at the Board of Supervisors offices. Access to such records and documents shall be granted to any party authorized by Contractor, Contractor's representatives, or Contractor's successor-in-interest.

7. **Independent Contractor:** Contractor is an independent contractor, not an employee of County. Nothing contained in this Contract, or any document executed in connection with this Contract, shall be construed to create an employer-employee, partnership or joint venture relationship between County and Contractor nor to allow County to exercise discretion or control over the manner in which Contractor performs the work or services that are the subject matter of this Contract; provided, however, the work or services to be provided by Contractor shall be provided in a manner consistent with reaching County's objectives in entering this Contract.

8. **Debarment and Suspension:**

    A. Certification Regarding Debarment: By signing this Contract, the Contractor certifies that neither the Contractor nor any of its principals are currently debarred or suspended by any Federal department or agency.

    B. Certification of Lower Tier Contractors Regarding Debarment: By administering any lower-tier subcontract exceeding $25,000 as a covered transaction under this Contract, the Contractor certifies that:

1) The Contractor has verified that each lower-tier subcontractor participating in a covered transaction is not presently debarred or suspended from participation in this Contract by any Federal department or agency.

2) Prior to entering into any lower-tier subcontract exceeding $25,000, the Contractor shall require each proposed subcontractor to disclose, in writing, whether, as of the time of award of the subcontract, the subcontractor or its principals is debarred or suspended by the Federal Government. The Contractor may accomplish this by:

   a) Checking the System for Award Management at website: http://www.sam.gov.
   b) Collecting a certification statement similar to the Certification Regarding Debarment, above.
   c) Inserting a clause or condition in the covered transaction with the lower tier contract.

9. **Indemnity and Liability:** Each party shall indemnify, defend, and hold the other party and its directors, officers, employees, and agents harmless against any claims of any kind, arising or alleged to arise out of the willful misconduct, negligent acts, omissions, or violations of law by the party.

10. **Insurance:** Contractor, at its own cost, agrees to maintain, for the duration of this Contract, the following insurance policies with insurers possessing a Best's rating of no less than A:VII:

A. **Workers' Compensation Coverage:** Contractor shall maintain Workers' Compensation Insurance and Employer's Liability Insurance for its employees in accordance with the laws of the State of California. In addition, Contractor shall require each subcontractor to similarly maintain Workers' Compensation Insurance and Employer's Liability Insurance in accordance with the laws of the State of California for all of the subcontractors' employees. Any notice of cancellation or non-renewal of all Workers' Compensation policies must be received by County at least 30 days prior to such change.

B. **General Liability Coverage:** Contractor shall maintain commercial general liability insurance in an amount of not less than $1,000,000 per occurrence for bodily injury, personal injury, and property damage. If a commercial general liability insurance form or other form with a general aggregate limit is used, either the general aggregate limit shall apply separately to the work to be performed under this Contract or the general aggregate limit shall be at least twice the required occurrence limit.

C. **Automobile Liability Coverage:** Contractor shall maintain automobile liability insurance covering bodily injury and property damage for all activities of the contractor arising out of or in connection with the work to be performed under this Contract, including coverage for owned, hired, and non-owned vehicles, in an amount of not less than $1,000,000 for each accident for bodily injury or property damage.

D. **Policy Endorsements:** All insurance, except workers' compensation, shall include an endorsement or an amendment to the policy of insurance:

1) Naming County, its elected officials, officers, employees, agents and volunteers as additional named insureds with respect to liability arising out of any and all work performed by or on behalf of the Contractor under this Contract;

2) Providing that Contractor's insurance shall be the primary insurance as respects County, its elected or appointed officers, officials, employees, agents and volunteers. Any insurance maintained by County, including any self-insured retention County may have, shall not be called upon to contribute to a loss covered by Contractor's insurance;

3) Providing the policy of insurance shall act for each insured and additional insureds as though a separate policy had been written for each, except with respect to the limits of liability of the insuring company;

4) Providing that the insurer waives all rights of subrogation against County, its elected or appointed officers, officials, employees, agents or volunteers;

5) Providing any failure to comply with the reporting provisions of the policy of insurance shall not affect coverage provided to County, its elected or appointed officers, officials, employees agents, or volunteers;

6) Providing broad-form contractual liability coverage insuring contractor's indemnity obligations under this contract; and

7) Providing that coverage under the policy shall not be suspended, voided, reduced or cancelled in coverage or in limits without 30 days written notice certain to County.

E. Deductibles and Self-insured Retentions: Any deductibles or self-insured retentions must be declared to and approved by County before work begins. At County's option, Contractor shall demonstrate financial capability for payment of such deductibles or self-insured retentions.

F. Proof of Coverage: At the time of execution of this contract, Contractor shall furnish County with copies of its insurance policies and endorsements affecting coverage required by this Contract.

11. Guarantees:

A. The Contractor shall guarantee all services provided in fulfillment of paragraph 1 above, and shall require each Subcontractor to guarantee their own work, against defective material or faulty workmanship for a minimum of one year after the date of Notice of Completion is issued. In addition, all standard manufacturer warranties shall be passed to the County which may extend the warranty period beyond one year.

B. The County retains all rights and remedies provided by law including those pertaining to latent defects.

C. If repairs are required in connection with guaranteed work, the Contractor shall promptly upon receipt of notice from the County, and without expense to the County:

1) Place in satisfactory condition in every detail all of such guaranteed work.

2) Make good all damage to the building, site, equipment, furniture, or contents which, in the opinion of the County, is the result of work not in accordance with the terms of the Contract Documents or disturbed in the process of correcting guaranteed work.

D. If the Contractor disturbs any work guaranteed under another contract in fulfilling the requirements herein they shall restore such disturbed work to a condition satisfactory to the County and guarantee such restored work to the same extent as it was guaranteed under such other contract.

E. A new full-term guarantee period shall apply to repaired work upon completion of repairs.

F. If Contractor fails to proceed to comply with the terms of the guarantee or make repairs of defective work within 7 days of Notice from County, the County may remedy the Contractor's failure by whatever means the County deems expedient. The County may, at any time, take measures to mitigate damage or reduce undesirable effects of defective work. All costs expended by County pursuant to this Section shall be paid by Contractor.

12. **Liquidated Damages:** The parties agree that should the work not be complete, as acknowledged with an executed Notice of Completion within the Term as specified in paragraph 2 above, damages will be sustained by the County. It is understood and agreed that it is or may be impracticable or extremely difficult to determine the actual amount of damages the County will sustain in the event of and by reason of such delay in completing the work; and it is therefore agreed that the Contractor will pay the County $250 per day for the County's liquidated damages. In the event the Contractor fails to make such payment, the County may deduct the amount thereof from any money due or that may become due the Contractor under the Contract and should the balance due not be sufficient to cover the amount owed, the County shall have the right to recover the balance from the Contractor, from other contracts between Contractor and County, or from the Contractor's sureties or any other means as allowed by law.

13. **Performance Standards:** Contractor shall use the standard of care in its profession and comply with all applicable federal, state and local laws, codes, ordinances and regulations.

14. **Department of Industrial Relations Registration:** Contractors and subcontractors shall register with the California Department of Industrial Relations (DIR) pursuant to California Labor Code sections 1771.1 and 1725.5. Contractors and any subcontractors shall supply County with a copy of proof of registration at the time of execution of this Contract.

15. **Prevailing Wage:** This Contract is subject to prevailing wage rates. Copies of the prevailing rates or per diem wages applicable to this Project are available from the California Department of Labor Statistics and Research at www.dir.ca.gov/dlsr/PWD/index.htm or 455 Golden Gate Avenue, 9th Floor, San Francisco, California 94102 (415) 703-4780. Contractor is required to post a copy of the wage rates on the job site. Any employee whose type of work is not covered by any of the classified wage rates shall be paid not less than the rate of wage listed for the classification which most nearly corresponds to the type of work to be performed. Pursuant to California Labor Code section 1775, Contractor, and any subcontractor, shall forfeit up to $200.00 per calendar day, or

portion of a day, for each worker paid less than the prevailing rates for such work or craft, and the penalty shall be imposed and distributed pursuant to Section 1775.

16. **Payment Bond:** Pursuant to Chapter 5, of Title 3, of Part 6, of Division 4 of the California Civil Code, if the Contract compensation exceeds $25,000, Contractor shall, before commencement of any work, provide County with a payment bond equal to 100% of the compensation payable in accordance with this Contract to secure the Contractor's, and any subcontractor's, performance and provide coverage for the services to be provided pursuant to this Contract by Contractor and any subcontractor.

17. **Payroll Records:** Contractor and all subcontractors shall keep accurate payroll records as required by California Labor Code section 1776.

    A. Upon written request by County, Contractor and all subcontractors shall, within ten (10) calendar days, provide County with a certified copy of all payroll records kept pursuant to Section 1776.

    B. Pursuant to Section 1776(h), Contractor and all subcontractors will be assessed a penalty of $100.00 for each calendar day, or portion thereof, for each worker if a certified copy of the records subject to Section 1776 are not made available as required by section 15 of this Contract.

    C. Contractors and any subcontractors shall furnish electronic payroll records to the California Labor Commissioner in accordance with California Labor Code section 1771.4.

18. **Licenses:** Contractor represents and warrants to County that it has all licenses, permits, qualifications, insurance, and approvals of whatsoever nature which are legally required of Contractor to practice its trade and/or profession. Contractor represents and warrants to County that Contractor shall, at its sole cost and expense, keep in effect or obtain at all times during the term of this Contract, any licenses, permits, insurance, and approvals which are legally required of Contractor to practice its trade and/or profession.

19. **Controlling Law Venue**: This Contract is made in the County of Colusa, State of California. The parties specifically agree to submit to the jurisdiction of the Superior Court of California for the County of Colusa.

20. **Written Notification**: Any notice, demand, request, consent, approval, or communication that either party desires or is required to give to the other party shall be in writing and either served personally or sent prepaid, first class mail. Any such notice, demand, etc., shall be addressed to the other party at the address set forth below. Either party may change its address by notifying the other party of the change of address. Notice shall be deemed communicated within 48 hours from the time of mailing if mailed as provided in this section.

If to County:	County of Colusa 547 Market St., Suite 102 Colusa, Ca, 95932

If to Contractor:

Arrow Fencing
PO Box 385
Calpella, Ca, 95418

21. **Entire Contract**: This Contract constitutes the complete and exclusive statement of contract between County and Contractor. All prior written and oral communications, including **correspondence**, drafts, memoranda, and representations, are superseded in total by this Contract.

22. **Amendments**: This Contract may be modified or amended only by a written document executed by both Contractor and County and approved as to form by the County Counsel.

23. **Waiver**: No failure on the part of either party to exercise any right or remedy provided for by this Contract shall operate as a waiver of any other right or remedy that party may have.

24. **Execution**: This Contract may be executed in several counterparts, each of which shall constitute one and the same instrument and shall become binding upon the parties.

25. **Assignment & Subcontracting**: The parties recognize that a substantial inducement to County for entering into this Contract is the professional reputation, experience, and competence of Contractor. Assignments of any or all rights, duties or obligations of Contractor under this Contract will be permitted only with the express consent of County. Contractor shall not subcontract any portion of the work to be performed under this Contract without the written authorization of County. If County consents to such subcontract, Contractor shall be fully responsible to County for all acts or omissions of the subcontractor. Nothing in this Contract shall create any contractual relationship between County and subcontractor nor shall it create any obligation on the part of County to pay any monies due to any such subcontractor unless otherwise required by law.

26. **Termination**: This Contract may be terminated for the following reasons:

    A. Immediately for cause if either party violates any of the terms or provisions of this Contract; or

    B. By County without cause upon 15 days written notice of termination.

27. **Partial Invalidity**. If any provision of this Contract is held to be invalid, void, or unenforceable, the remainder of the provision and/or provisions shall remain in full force and effect and shall not be affected or invalidated.

28. **Attachments:** All attachments referred to are incorporated and made part of the Contract. Attachments include:

    A. Attachment "A" Project Specifications
    B. Attachment "B" Cost Proposal

COUNTY OF COLUSA

_____Date_____
Daurice K. Smith, Board Chair

WOIDA ENTERPRISES INC., DBA ARROW FENCING

_____Date_____
Signature

_____
Printed Name and Title

APPROVED AS TO FORM

ATTEST: Marcos Kropf, Interim Clerk of the Board of Supervisors

_____
Richard Stout, County Counsel

By _____
, Deputy

Attachment A
Project Specifications

Colusa County Sheriff's Office Fencing Project
929 Bridge St., Colusa, Ca

Project Overview

This project includes the as-built design, procurement and installation of approximately 1,600 linear feet of chain link fencing, five (5) vehicle cantilever slide gates (including four (4) motorized gates and one (1) manual gate) and three (3) pedestrian access gates. Gate automation, safety devices, and access control systems will be installed per the specifications outlined below. Fence Layout is enclosed as Attachment D.

The project is to include 40 vehicle gate openers, keypads, 100 access key cards, fire box and control by dispatch accessibility to enter the facility only to authorized personnel.

The RFP intentionally defines the design process as an evolved, as-built system, rather than a fixed, fully predefined blueprint. This adaptive methodology allows for refinement of details and alignment with actual site conditions throughout the course of construction.

Fencing Specifications

- Total Fence Length: Approximately 1,600 linear feet of chain link fencing.
- End Posts:
  - 4" schedule 40 steel pipe, set in concrete footing (12" wide x 42" deep).
- Line Posts:
  - 2-7/8" schedule 40 steel pipe, spaced at 10 ft. intervals, set in 12" wide x 36" deep concrete footing.
- Chain Link Fabric:
  - 9-gauge galvanized steel, 1" mesh.
- Top Rail and Mid-Rail (Corner Bracing):
  - 1-5/8" Schedule 40 steel pipe.
- Bottom Tension Wire:
  - 7-gauge galvanized tension wire (coil type).

- Twist selvage on top of fence. No barb wire.
- Fence Height: include pricing for both 7’ and 8’ feet fence.

Pedestrian Gates

- Quantity: 3 pedestrian man gates (Gates 1a, 5a, and 5b).
- Gate Frame: 2” square steel tubing.
- Posts: 4” square steel posts.
- Access Control:
  - Gates 1a, 5a and5b will be accessible via department-issued keys.
- Additional Features:
  - Kickplate on "push" side.
  - Self-closing hinges.
  - Mammoth closer and Keyed Mortise Locks.

Vehicle Cantilever Slide Gates

- Quantity: 5 total gates for 30-foot openings.
  - Gates 1, 3, 4, 5: Motorized
  - Gate 2: Manual operation only
- Manufacturer: Tymetal or equivalent.
- Type: TIGER Cantilever Slide Gate or equivalent.
- Gate Operator: HySecurity Model HD30 (post-mounted on 4" posts) or equivalent.

Access Control Configuration:

- Gate 1: Exit only. Controlled by loop system, dispatch and vehicle gate openers. The gate may recess inward from property line.
- Gate 2: Exit only. Manual operation only. Double swing gate. The gate cannot be recessed off the property boundary.
- Gate 3: Exit only. Controlled by loop system only and vehicle gate openers. The gate may recess inward from property line.
- Gate 4: Controlled by vehicle gate openers and loop system.
- Gate 5: Main entry gate. Controlled by key pad, card reader, dispatch, loop system and vehicle gate openers. There needs to be an intercom for the driver to interact with dispatch.
- Gates 1, 3, 4 & 5:
  - Equipped with Knox Boxes for emergency Fire Department access.

Safety & Automation Features (Motorized Gates Only):

- Photo Eye Sensors:
  - Thru-beam photo eyes installed across each gate opening and along the fence line where gates slide.
- Gate Safety Edges:
  - Installed on posts at openings for collision detection.
- Vehicle Detection Loops:
  - Three (3) ground loops per motorized gate for exit, safety reversal, and entry activation.

- Loop systems to be installed at Gates 1, 3, and 5 only.

General Requirements

- Contractor is responsible for layout, excavation, and proper concrete installation for all posts.
- Contractor is responsible for all electrical conduit and connections except for the recent conduit that was installed. Two 4" conduits have been installed for Gate 1.
- All concrete to meet a minimum of 3,000 psi.
- All materials shall comply with applicable local building codes and industry standards.
- Final walkthrough and performance testing are required before project closeout.
- Site must be cleared of construction debris and returned to original or better condition.
- This Project is funded by federal or federal-assisted infrastructure funds and is subject to the Build America, Buy America Act (BABA) requirements.
- Survey points to be provided for project boundaries to Contractor.
- Wallace Safe & Lock Co., Inc. should be consulted for all door-lock and key work. This is the vendor the Sheriff's Department currently uses for its department-issued keys. Wallace Safe & Lock can be reached at (530) 666-2454 and is located in Woodland, California. If feasible, the Department requests that all new gate locks be keyed to match the existing Sheriff's Department key system.

Deliverables

- Installation of all fencing and gates per specifications.
- Operational gate automation and access control systems, fully tested.
- Integration of safety and fire access systems.
- Upon completion of installation, the contractor shall submit comprehensive as-built documentation covering fencing, pedestrian and vehicle gates, access control devices, safety systems, electrical connections, photo sensors, vehicle loop detectors, and any site-specific modifications. The Contractor shall furnish and install junction boxes at each conduit termination point such that the top of each box is flush with the finished asphalt surface.
- Final inspection and sign-off.

ARROW FENCING

Agricultural • Commercial • Residential

State & Federal

License # 585041

Contract

Arrow Fence
P.O. Box 385
Calpella, CA 95418
+17074851128
State Lic. #585041
DIR #1000022055
www.arrowfencingca.com
chris@arrowfencingca.com

Contact:

County Of Colusa
Rick Luigard
547 Market St
Colusa, CA 95932
(530) 458-0437
purchasing@countyofcolusaca.gov

Job Location:

7 Foot tall Fence Colusa County
Sheriff's Office Fencing Project
929 Bridge St
Colusa, CA 95932

Estimate Info:

Date: 09/24/2025
Estimate: County Of Colusa (Rick Luigard)
Rep: Chris Woida
Job #361

Proposal/Contract

All inclusive Pricing. Labor, Materials, Equipment, Subcontractors, Mobilization, Insurance, Bonds, and all other costs. BMP'S And sale Tax !

No exclusions. Optional Line Items : We bid USA SCH 40 pipe as per Addendum 1 General Requirement's. If DQ USA pipe is substituted Credit back $16,000.00 off the bid price Addendum 1,2,3. Noted

Grand Total	$ 480,000.=
Amount Due	$ 480,000.=

I understand and agree with the enclosed contract.

Signature — Date 9/25/25

DBA

Arrow Fence / Woida Ent

Company Name — Date

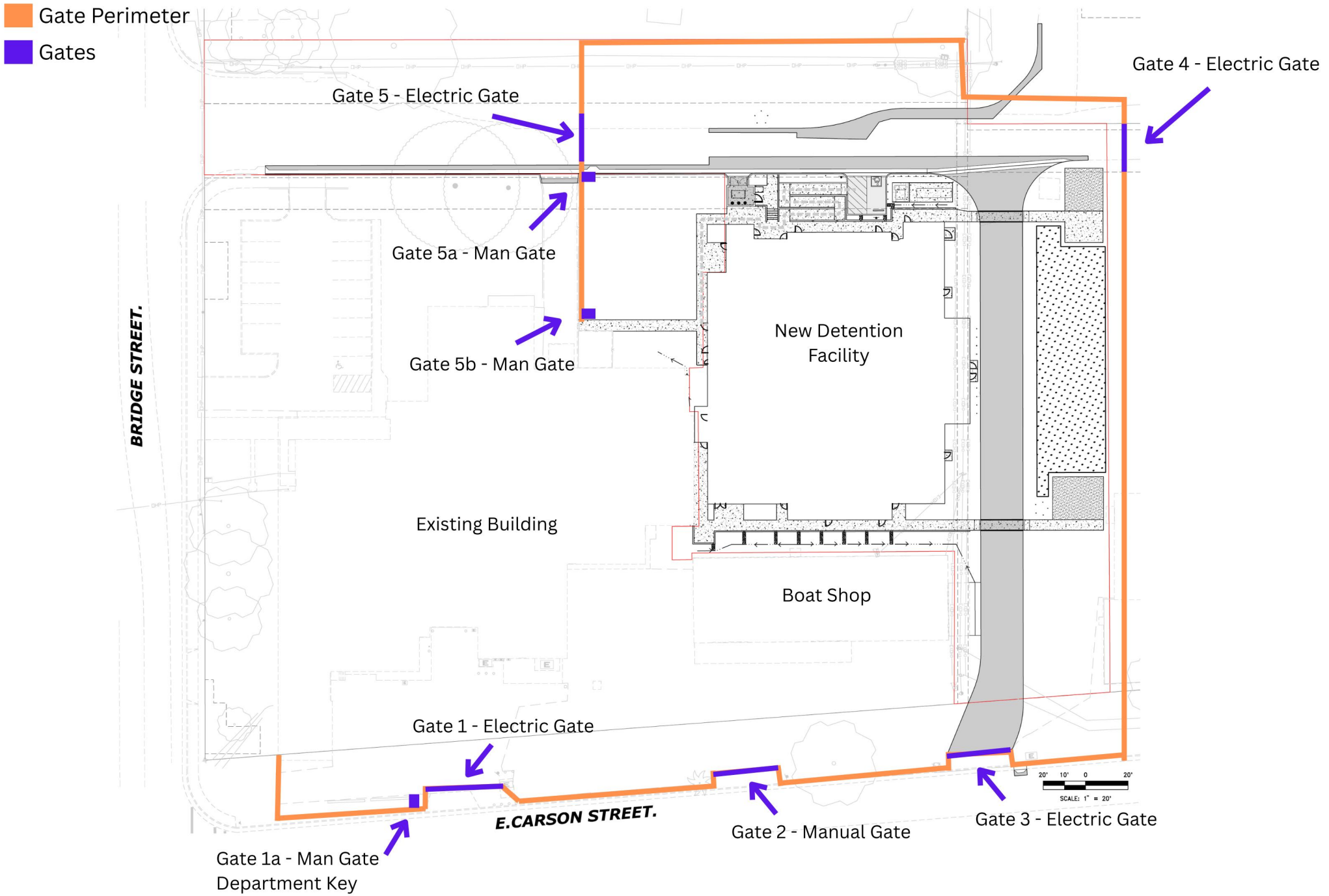

Attachment C

Woida Enterprises Inc. dba Arrow Fencing

P.O. Box 385 Calpella, Ca 95418

707-485-1128

(Copy Two – Full Set)

Response to Request for Proposal

Colusa County Sheriff's Office Fencing Project

Design, Procure and Install

County of Colusa

547 Market St. Ste 102

Colusa, Ca 95932

Table of Contents:

Title Page

B. Statement of Experience

C. Scope Statement

D. Schedule of Work

E. References

F. Certificate of Ins.

Contractor License

Small Business Certification

DIR

G. Bid Bond

H. Proposer Statement

I. Secretary of State / Articles of Incorporation

J. Acceptance of Terms & Conditions

K. Addendums

L. Site Map

**** Following tabs are submittals, product & material information sheets**

Title Page:

County Of Colusa – Request for Proposal

Colusa County Sheriff's Office Fencing Project – Design, Procure, Install

Submitted: Sept 26, 2025

Proposal offered by Woida Enterprises Inc. dba Arrow Fencing, A California Corporation

Corporation Number: C2497460

DIR # 1000022055 Exp 06/27

Small Business Cert. Number 1324

Contact Information:

Chris Woida – President

Email: chris@arrowfencingca.com

Physical Address: 9711 N State St. Suite B Redwood Valley, Ca 95470

Mailing Address: P.O. Box 385 Calpella, Ca 95418

Office: 707-485-1128

Cell: 707-272-3451

Contract Management:

Anne Woida – anne@arrowfencingca.com 707-272-9611

Accounting & Payroll:

Debby Fields – debbie@arrowfencingca.com 707-485-1128

Statement of Experience & Introduction:

Woida Enterprises Inc. dba Arrow Fencing has been an established business and corporation for over 42 years, Prior to that I started and ran the company from inception to today. We are a certified small business and a union company.

In my over 42 years of operating a fencing company and corporation I have learned that being well tooled, well equipped, and always on site to project manage are key components to success. To this day, as the President and Owner, I am on site at every project. While our work volume is fairly large, we do concentrate on one project at a time to have the manpower and collective experience to get the project done right and within deadlines.

Our employees range from being with this same company for 30 years to 8 years. This builds in added strength, knowledge, technical abilities, hands on experience, and innovation while it also enhances every job with our well -oiled teamwork and mutual support.

Cal Trans work has become a bit of a specialty to us over the years. We do specialize in iron fencing, chain-link fencing and automation. This project is comparable to that in many of its details.

For us, all aspects of this project, from designing it, ordering the parts, teamwork, scheduling, efficient, safe and timely installation are the key components that we bring to each job followed by an excellent track record for owner satisfaction, industry knowledge in almost all fencing applications and technical support.

We thank you for your time and consideration. We have enclosed a wide range of past projects for your review and are available to answer any questions or elaborate on items enclosed.

Sincerely,

Chris Woida

President

Scope Statement:

Colusa County Sheriff Office Fencing Project

Submitted By: Woida Enterprises Inc. dba Arrow Fencing

Scope Of Work:

Provide and install perimeter fence as per plan and spec (per Addendum 1)

Clear and grub the fence line and off haul

Call for USA and mark out underground utilities, if needed utilize a vendor company to scan for private lines

Lay out of fence line and gates for owner approval prior to any excavation.

Auger or Hydro vac hole(s) to depth. Remove off haul spoils.

Set post with 3000 psi concrete, install top and mid rails, install fence with mechanical stretching cage

Tie post and rails, walk completed fence with the owner for any punch list items

Gate #2 will be a manual 30' DBLE Swing, see attached shop drawing with a 1500 Knox box

Gate #3 #4, Exit gates

Gates #1 & #5 Enter gates, with Gate-Guard call box,

Card reader (with 100 cards supplied) will be mounted on a side-by-side dual goose neck, the card reader will be a MR-1824 Sentinel Prox Proximety Reader. To use (just hold the card up as you pass by, you do not have to get to close to the reader)

Saw cut 2 loops 4'x22' or for your consideration OVS – 50 through beam photo eye, which is mounted on a post. See submittal sheet.

Install 2, 4"x4"x7' Square yellow bollard post to protect the goose neck post, which holds the card reader.

Gate 1 will have 7' Bollard post to protect the gate in the open position

30'+- Tymetal Tigert Cantilever gates

Installation will be complete with all loops, edges, photo eyes, UL325 and ASTM F2200 (see attached)

Scope Statement:

Colusa County Sheriff Office Fencing Project

Submitted By: Woida Enterprises Inc. dba Arrow Fencing

Scope of Work Continued:

Power & trench. Gates 1,3,4,5.

Gate #1 power comes from an existing panel, may need to install transformer

Install N09 Cristy Box over existing conduit

Run 1'' to disconnect switch mounted on a 4x4 yellow bollard post 1'' to opener

Gate # 3 and #4 power comes from animal control building with the existing panel

Gate #3 270' of trench 1-1'' conduit 1 N09 pull box

Gate #4 180' of trench 1 N09 pull box

Gate # 5 1'' will run on top of roof or from the building left of the stair case,

or using the animal shelter breaker box and trenching along the East fence line

Gate 1-A 5 A5-B walk gate see shop drawing

Gates 1,3,4,5. Will have #3502 Knox Box

All work components will be complete and in place delivering a turn-key system

Scope Statement:

Colusa County Sheriff Office Fencing Project

Submitted By: Woida Enterprises Inc. dba Arrow Fencing

Proposer Responsibilities:

Complete management of the project

We will always be responsible for the entire job

Water pollution control training of employees

BMP's if needed

24-7 Contract information will be provided

Update the owner daily or as needed with any concerns and progress of the job

Coordinate to have minimum impact daily facility operations

Keep a safe, clean and organized job site

Provide temp fence as needed to assist in site security.

Work with any adjacent property owners to minimized impact

Keep a respectful and friendly work place

Scope Statement:

Colusa County Sheriff Office Fencing Project

Submitted By: Woida Enterprises Inc. dba Arrow Fencing

Deliverables:

Installation of all fencing and gates per specifications. Provide all fence and automation for a complete turn key project

Operational gate automation and access control systems, fully tested

Install Knox box fire dept key switches at gate(s) 1,3, 4 & 5. Gate 1 gets a Knox box vault.

Provide a complete submittal package

Provide all necessary labor, tools, and equipment

Go over complete operations & manuals, automation and maintenance required for future operations. Upon completion of installation contractor will supply comprehensive as-built documentation covering fencing, pedestrian and vehicle gates, access control devices, safety systems, electrical connections, photo sensers, vehicle loop detectors, and any site specific modifications. The contractor shall furnish and install junction boxes at each conduit termination point such that the top of each box is flush with the finished asphalt surface.

Final Inspection and sign-off

Scope Statement:

Colusa County Sheriff Office Fencing Project

Submitted By: Woida Enterprises Inc. dba Arrow Fencing

Page 5 of 5

Assumptions:

Owner to review and process submittals

Contractor will have clean, clear and open access to jobsite.

Constraints:

Owner contractual obligation turnaround

Overlap of other existing projects on owner's job site location: 929 Bridge St.

USA sch 40 pipe lead time 6- weeks

If we go with DQ 40 USA lead time can be within 2 weeks

Holidays or weather

Materials may affect the actual order and install dates on our construction schedule only. That will not affect the completion timeline/date.

Rest assured this project will be completed well within the time allowed. This project is 4-5 weeks for us to complete. I want to be completely transparent.

Contractor: Woida Ent. Inc dba Arrow Fencing

Date: 9/24/25

Signed By: ✓ Chris Woida Corporate Seal:

Title: President

Signed By: ✓ Chris Woida

Title: Secretary

Arrow Fencing ‹ ›truction Schedule

| | | |

References:

Emergency Operations Center Security Upgrades Project – CE 24-25-08

Install Iron Fence & Automatic gates, ADA walk gates, Iron gates, security gates, know box systems and strobe system to communicate with the fire dept.

Project Location: 1990 Walsh Avenue Santa Clara, CA 95050

Owner: City of Santa Clara

Contact: Brent at berkel@santaclaraca.gov

Phone: 408-799-9564

Contact: Kaveh at kforouhi@santaclaraca.gov

Phone: 408-506-4328/408-615-3064

Contract Amount: 558,000.00

Contract Start Date: August 25,2025

Contract Completion Date: (target date) Sept. 30, 2025

03-0N9904 Install Automatic Gates Various locations, Cal Trans Maintenance Yards

Install Iron fencing, chain-link fencing, 7 Automatic Gates at various maintenance station locations. We ran power, trenching, install monitoring systems and cameras.

Location: Sac/Yolo/Placer County Cal Trans Maintenance Yards

Owner: Cal Trans Dept. of Transportation

Contact: Hani Eissa at hani.eissa@dot.ca.gov

Phone: 916-416-7513

Contact: Wael Jaradat at wael.jaradat@dot.ca.gov

Phone: 916-825-7934

Contract Amount:3,400,000.00

Contract Start Date: Sept. 19, 2024

Contract Completion Date: March 06, 2025

References Continued:

Cal Trans Maintenance Yard 01-OP0604 Automatic gates at Various Locations

Chain-link fencing, Iron fencing, Install 5 Automatic gates, Knox box systems, run power, disconnect switches

Owner: Cal Trans Dept of Transportation

Contact: Mike Thiel at mike.thiel@dot.ca.gov

Phone: 707-834-1035

Contract Amount: 394,570.87

Contract Start Date: March 19, 2025

Contract Completion Date: July, 28, 2025

A compilation of other projects has been attached for further references. More information available upon request.

2024 Public Works Completed Jobs

Contract: Replace right of way fence – **02A2254**

Owner: State of California, Dept. of transportation

Contract Amount: $354,515.00

Completed: 5/6/2024

Contact: Henry Benner- (530)328-3629 / henry.brenner@dot.ca.gov

Contract completed on time and on budget

Contract: Remove and replace R/W fence – Merced – **10A2595**

Owner: State of California. Dept. of transportation

Contract Amount: $187,730.00

Completed: 5/20/2024

Contact: Tofael Anwar – (209)470-6417 / tofael.anwar@dot.ca.gov

Contract completed on time and on budget

Contract: French Camp - **10A2576**

Owner: State of California, Dept. of transportation

Contract Amount: $223,670.31

Completed: 4/1/2024

Contact: Mohamed Taleb – (925)360-3252 / mohamed.taleb@dot.ca.gov

Contract completed on time and on budget

Contract: Royal Oaks Maintenance Station

Owner: State of California, Dept. of transportation

Contract Amount: $150,00.00

Completed: 10/4/2024

Contact: Jimmy Ngo – (916)639-5830 / jimmy.ngo@dot.ca.gov

Contract completed on time and on budget

Contract: Grace Hudson School – **6H624**

Owner: Ukiah Unified School District

Contract Amount: $701,950.00

Completed: 8/28/2024

Contact: Prime GCCI – (707)545-2134

Tenaya Dale – (707)824-8440 / tdale@counterpointcs.com

Dallas Galton – (707)570-7421 / dallas@gcci.com

Contract completed on time and on budget

Contract: Lake County Special District fence repair – **24-UA2**

Owner: Lake County Special District

Contract Amount: $35,200.00

Completed: 1/29/2024

Contact: Steve Phillips – (707)263-0119 / steven.phillips@lakecountyca.gov

Contract completed on time and on budget

Contract: Kelseyville High School Fence Installation

Owner: Kelseyville Unified School District

Contract Amount: $29,287.12

Completed: 2/28/2024

Contact: Kyle (707)272-7315

Contract completed on time and on budget

Contract: Orr Creek Fencing Project

Owner: MCOE (Mendocino County Of Education)

Contract Amount: $65,000.00

Completed: 9/11/2024

Contact: Heather Rantala – (707)467-5034

Contract: Cal Trans - **03-0N9904**

Owner: Cal Trans Dept. of transportation

Contract Amount: $3,439,000.00

Completed: 3/10/2025

Contact: Deya Dean Eighassein – (916)768-3597 / deyaedean.eighassein@dot.ca.gov

Contract completed on time and on budget

2023 Jobs Completed - Public Works (Sample, not all included, if you need more, please request)

Contract: Replace Fence - Merced-**10A2470**

Owner: State of California, Dept of Transportation

Contract Amount: $91,381.00

Completed: 09/28/2023

Contact: Tofal Anwar - (209) 470-6417| tofal.anwar@dot.ca.gov

Contract completed on time and on budget

Contract: Chain Link Type 7 Tracy – **10A2454**

Owner: State of California, Dept of Transportation

Contract Amount: $145,375.00

Completed: 03/09/2023

Contact: David Abledu – (209) 483-5812 | david.abledu@dot.ca.gov

Contract completed on time and on budget

Contract: Replace right of Way Fence - Gustine -**10A2462**

Owner: State of California, Dept of Transportation

Contract Amount: $142,046.49

Completed: 10/03/2023

Contact: Tofal Anwar – (209) 470-6417| tofal.anwar@dot.co.gov

Contract completed on time and on budget

Contract: Fencing and Gates -**SC-32-3100**

Owner: FRC Inc. Job #2305 for Ukiah Unified School District

Contract Amount: $575,427.54

Completed: 08/11/2023

Contact: Josh Kurczeski – 707-837-5065 | josh@frcinc.biz.

Contract completed on time and on budget

Contract: Fencing and Gates -**SC-32-3100**

Owner: FRC Inc. Job #2304 for Ukiah Unified School District

Contract Amount: $157,050.

Completed: 08/11/2023

Contact: Josh Kurczeski – 707-837-5065 | josh@frcinc.biz.

Contract completed on time and on budget

Contract: Wildlife Fence and Gates – **01-2982U4**

Owner: OC Jones and Sons Inc. for State of California Dept of Transportation

Contract Amount: $536,492.00

Completed: 10/18/2023

Contact: Dan Kraft– 530-713-7864 | dan.kraft@dot.ca.gov.

Contract completed on time and on budget

Contract: Remove and Replace Chainlink Fencing -**23-00956**

Owner: Kelseyville Unified School district

Contract Amount: $7087.13

Completed: 02/23/2023

Contact: Kyle Reams- 707-279-8405 | kreams@kvusd.org

Contract completed on time and on budget

CERTIFICATE OF LIABILITY INSURANCE

DATE (MM/DD/YYYY): 9/16/2025

THIS CERTIFICATE IS ISSUED AS A MATTER OF INFORMATION ONLY AND CONFERS NO RIGHTS UPON THE CERTIFICATE HOLDER. THIS CERTIFICATE DOES NOT AFFIRMATIVELY OR NEGATIVELY AMEND, EXTEND OR ALTER THE COVERAGE AFFORDED BY THE POLICIES BELOW. THIS CERTIFICATE OF INSURANCE DOES NOT CONSTITUTE A CONTRACT BETWEEN THE ISSUING INSURER(S), AUTHORIZED REPRESENTATIVE OR PRODUCER, AND THE CERTIFICATE HOLDER.

IMPORTANT: If the certificate holder is an ADDITIONAL INSURED, the policy(ies) must have ADDITIONAL INSURED provisions or be endorsed. If SUBROGATION IS WAIVED, subject to the terms and conditions of the policy, certain policies may require an endorsement. A statement on this certificate does not confer rights to the certificate holder in lieu of such endorsement(s).

PRODUCER
Sander, Jacobs, Cassayre Insurance Services
3200 Villa Lane
Napa CA 94558
License#: 0M93299

CONTACT NAME: Melissa Bishop
PHONE (A/C, No, Ext): 707-252-8822 **FAX (A/C, No):** 707-253-8255
E-MAIL ADDRESS: certificates@sanderjacobs.com

INSURER(S) AFFORDING COVERAGE	NAIC #
INSURER A : State Compensation Insurance Fund	35076
INSURER B : West American Insurance Company	44393
INSURER C : Palomar Specialty Insurance Company	20338
INSURER D : Travelers Property Casualty Company of America	25674
INSURER E :	
INSURER F :	

INSURED
Woida Enterprises Inc. DBA Arrow Fencing
P O Box 385
Calpella CA 95418-0385
WOIDENT-01

COVERAGES **CERTIFICATE NUMBER:** 209902953 **REVISION NUMBER:**

THIS IS TO CERTIFY THAT THE POLICIES OF INSURANCE LISTED BELOW HAVE BEEN ISSUED TO THE INSURED NAMED ABOVE FOR THE POLICY PERIOD INDICATED. NOTWITHSTANDING ANY REQUIREMENT, TERM OR CONDITION OF ANY CONTRACT OR OTHER DOCUMENT WITH RESPECT TO WHICH THIS CERTIFICATE MAY BE ISSUED OR MAY PERTAIN, THE INSURANCE AFFORDED BY THE POLICIES DESCRIBED HEREIN IS SUBJECT TO ALL THE TERMS, EXCLUSIONS AND CONDITIONS OF SUCH POLICIES. LIMITS SHOWN MAY HAVE BEEN REDUCED BY PAID CLAIMS.

INSR LTR	TYPE OF INSURANCE	ADDL INSD	SUBR WVD	POLICY NUMBER	POLICY EFF (MM/DD/YYYY)	POLICY EXP (MM/DD/YYYY)	LIMITS	
C	X COMMERCIAL GENERAL LIABILITY			CPGLP-00000794	8/29/2025	8/29/2026	EACH OCCURRENCE	$ 1,000,000
	CLAIMS-MADE X OCCUR						DAMAGE TO RENTED PREMISES (Ea occurrence)	$ 50,000
							MED EXP (Any one person)	$ 5,000
							PERSONAL & ADV INJURY	$ 1,000,000
	GEN'L AGGREGATE LIMIT APPLIES PER:						GENERAL AGGREGATE	$ 2,000,000
	POLICY X PRO-JECT LOC						PRODUCTS - COMP/OP AGG	$ 2,000,000
	OTHER:							$
B	AUTOMOBILE LIABILITY			BAW59927693	6/10/2025	6/10/2026	COMBINED SINGLE LIMIT (Ea accident)	$ 1,000,000
	X ANY AUTO						BODILY INJURY (Per person)	$
	OWNED AUTOS ONLY / SCHEDULED AUTOS						BODILY INJURY (Per accident)	$
	HIRED AUTOS ONLY / NON-OWNED AUTOS ONLY						PROPERTY DAMAGE (Per accident)	$
								$
D	UMBRELLA LIAB X OCCUR			CUP-B5360102-25-NF	8/29/2025	8/29/2026	EACH OCCURRENCE	$ 5,000,000
	X EXCESS LIAB CLAIMS-MADE						AGGREGATE	$ 5,000,000
	DED RETENTION $							$
A	WORKERS COMPENSATION AND EMPLOYERS' LIABILITY Y/N			9043801	2/1/2025	2/1/2026	X PER STATUTE OTH-ER	
	ANY PROPRIETOR/PARTNER/EXECUTIVE OFFICER/MEMBER EXCLUDED? (Mandatory in NH)	N/A					E.L. EACH ACCIDENT	$ 1,000,000
	If yes, describe under DESCRIPTION OF OPERATIONS below						E.L. DISEASE - EA EMPLOYEE	$ 1,000,000
							E.L. DISEASE - POLICY LIMIT	$ 1,000,000

DESCRIPTION OF OPERATIONS / LOCATIONS / VEHICLES (ACORD 101, Additional Remarks Schedule, may be attached if more space is required)
When required by written contract, attached endorsements apply.

CERTIFICATE HOLDER

County of Colusa
Purchasing and Procurement
547 Market St. Suite 110
Colusa CA 95932

CANCELLATION

SHOULD ANY OF THE ABOVE DESCRIBED POLICIES BE CANCELLED BEFORE THE EXPIRATION DATE THEREOF, NOTICE WILL BE DELIVERED IN ACCORDANCE WITH THE POLICY PROVISIONS.

AUTHORIZED REPRESENTATIVE
Charles H. Lydick

© 1988-2015 ACORD CORPORATION. All rights reserved.

The ACORD name and logo are registered marks of ACORD

THIS ENDORSEMENT CHANGES THE POLICY. PLEASE READ IT CAREFULLY.

EXCLUSION – DESIGNATED OPERATIONS COVERED BY A CONTROLLED (WRAP-UP) INSURANCE PROGRAM

This endorsement modifies insurance provided under the following:

COMMERCIAL GENERAL LIABILITY COVERAGE PART

SCHEDULE

Description And Location(s) Of Operation(s):
All locations where a "controlled (wrap-up) insurance program" has been provided
Information required to complete this Schedule, if not shown above, will be shown in the Declarations.

A. The following exclusion is added to Paragraph **2. Exclusions** of **Section I – Coverage A – Bodily Injury And Property Damage Liability:**

This insurance does not apply to "bodily injury" or "property damage":

1. Arising out of your ongoing operations; or
2. Included in the "products-completed operations hazard";

at the location(s) described in the Schedule of this endorsement, but only if you are enrolled in a "controlled (wrap-up) insurance program" with respect to the "bodily injury" or "property damage" described in Paragraphs **A.1.** and **A.2.** above at such location(s).

This exclusion applies whether or not the "controlled (wrap-up) insurance program":

a. Provides coverage identical to that provided by this Coverage Part;

b. Has limits adequate to cover all claims; or

c. Remains in effect.

B. The following definition is added to the **Definitions** section:

"Controlled (wrap-up) insurance program" means a centralized insurance program under which one party has secured either insurance or self-insurance covering some or all of the contractors or subcontractors performing work on one or more specific project(s).

© ISO Properties, Inc., 2018

POLICY NUMBER: CPGLP-00000794

RESIDENTIAL CONSTRUCTION EXCLUSION WITH SCHEDULED EXCEPTIONS

THIS ENDORSEMENT CHANGES THE POLICY, PLEASE READ IT CAREFULLY.

This insurance does not apply to "bodily injury," "property damage," "personal injury" or "personal and advertising injury" arising out of, attributable to or in any way related to:

1. "Your work" or any work performed on your behalf arising out of construction operations to residential or commercial apartments, condominiums, family dwellings, townhouses or similar structures.

2. "Your product" or any product provided on your behalf, which will or have become a part of the real property of any residential or commercial apartments, condominiums, family dwellings including single family homes whether constructed individually or as a part of a tract, townhouses or similar structures.

This exclusion applies for all "bodily injury," "property damage," "personal injury" or "personal and advertising injury" regardless of whether any claim, injury or damage arises out of your ongoing operations or operations included within the "products-completed operations hazard."

However, this exclusion will not apply to:

work for apartments

This endorsement does not change any other provision of the policy.


STATE OF CALIFORNIA
dca
DEPARTMENT OF CONSUMER AFFAIRS
CONTRACTORS
STATE LICENSE BOARD
ACTIVE LICENSE
License Number 585041
Entity CORP
Business Name WOIDA ENTERPRISES INC DBA
ARROW FENCING
Classification(s) C13 C61/D28
Expiration Date 03/31/2026
www.cslb.ca.gov
CSLB

Printed on: 3/4/2024 11:12:10 AM

To verify most current certification status go to: https://www.caleprocure.ca.gov

DGS
GENERAL SERVICES

Office of Small Business & DVBE Services

Certification ID: 1324

Legal Business Name:
Woida Enterprises, Inc.

Doing Business As (DBA) Name 1:
Arrow Fencing

Doing Business As (DBA) Name 2:
Woida Ent. Inc dba Arrow Fencing

Address:
p.o. Box 385
Calpella
CA 95418

Email Address:
anne@arrowfencingca.com

Business Web Page:

Business Phone Number:
707/485-1128

Business Fax Number:
707/485-1142

Business Types:
Construction , Non-Manufacturer , Service

Certification Type	Status	From	To
SB(Micro)	Approved	03/04/2024	03/31/2026

CA

DIR Services Portal

Improving working conditions in California since 1927

How can we help?

Associated Accounts

Welcome, Anne Woida

Woida Ent inc dba Arrow Fencing 1000022055

Unlink From Business

DIR Approved

Manage Contractor Employees

Current registration valid from
July 1, 2025 to June 30, 2027

Request Addition to a Project Team

My Projects

Search My Projects

All

Name	Project Number	State	Stage	Awarding Body	Submit new ECPR	View eCPRs
2024 Orr Creek Fencing Project	06112024	Approved		Mendocino County Office of Education	Submit	View eCPRs
Frank Zeek TK-K Classroom Expansion Proj	315014	Approved		Ukiah Unified School District	Submit	View eCPRs
Grace Hudson TK-K Classroom Expansion Pr	315017	Approved		Ukiah Unified School District	Submit	View eCPRs
EFA - 03A3883	03-0N9904	Approved		California Department of Transportation ...	Submit	View eCPRs
Mendocino-Ukiah Courthouse-20230306	23-H1	Approved		Judicial Council of California - (PUB WO...	Submit	View eCPRs
SB MINOR B 10A2745 Replace Eastbound Ro	1N030	Approved		California Department of Transportation ...	Submit	View eCPRs
Perimeter Fence Replacement	32A0603	Approved		California Department of Transportation	Submit	View eCPRs
Spring Valley Fence 2025	PO 25-262-028	Approved		Lake County Sanitation District	Submit	View eCPRs
CHP Santa Rosa Area office	24C360002	Approved		California Highway Patrol - (PUB WORKS)	Submit	View eCPRs
Fence Replacement	1P860	Approved		Department of Transportation - DPAC	Submit	View eCPRs

CA

1000022055 - Woida Ent inc dba Arrow Fencing

Customer Account Lookup

PWCR	Legal Entity Name
1000022055	Woida Ent inc dba Arrow Fencing
Contractor Status	Doing Business As (DBA)
DIR Approved	Woida Ent inc dba Arrow Fencing
CSLB	Business Structure
	-- None --
Business Phone	President
7074851128	Chris Woida
Ext	Email
	chris@arrowfencingca.com
Registration Start Date	Registration End Date
2025-07-01	2027-06-30

Crafts

Laborer (Construction-Fence Erector-Housemover) (Engineering Construction) | Fence Builder (Carpenter)

Address

Mailing Address	Physical Address
9711 B North State St	PO BOX 385
Mailing Address - City	Physical Address - City
Redwood Valley	CALPELLA
Mailing Address - State	Physical Address - State
California	CA
Mailing Address - Zip	Physical Address - Zip
95482	95418
Mailing Address - Country	Physical Address - Country
United States	United States

Related Lists

Registration Dates (13)

TOKIO MARINE HCC

Surety Group
801 S Figueroa Street, Suite 700
Los Angeles, CA 90017 USA
Tel: 310-649-0990

Bond Number: BB2026034

BID BOND

KNOW ALL PERSONS BY THESE PRESENTS:

That we, WOIDA ENTERPRISES INC. DBA ARROW FENCING (hereinafter called Principal), as Principal, and AMERICAN CONTRACTORS INDEMNITY COMPANY, a corporation organized and existing under the laws of CALIFORNIA, (hereinafter called Surety) as Surety, are held and firmly bound unto COUNTY OF COLUSA (hereinafter called Obligee) as Obligee, in the penal sum of ..... TEN percent (10 %) of amount bid not to exceed SEVENTY SEVEN THOUSAND..... Dollars ($ 77,000.00) for the payment of which the Principal and the Surety bind themselves, their heirs, executors, administrators, successors and assigns, jointly and severally, firmly by these presents.

THE CONDITION OF THIS OBLIGATION IS SUCH, That, whereas the Principal has submitted or is about to submit a proposal to the Obligee on a contract for COLUSA COUNTY SHERIFF'S OFFICE FENCING PROJECT DESIGN, PROCURE AND INSTALL, AT 929 BRIDGE ST., COLUSA, CA

NOW, THEREFORE, if the said contract be awarded to the Principal and the Principal shall, within such time as may be specified, enter into the contract in writing, then this obligation shall be void. If the Principal shall fail to do so, then the undersigned shall pay the obligee the damages which the obligee may suffer by reason of such failure up to and not exceeding the penal sum of the bond.

Signed and sealed this 25 day of AUGUST, 2025.

Principal: WOIDA ENTERPRISES INC. DBA ARROW FENCING

By: _____
JAY CHRIS WOIDA, PRESIDENT

Surety: AMERICAN CONTRACTORS INDEMNITY COMPANY

By: _____
BRYAN RICHMOND Attorney-In-Fact

Any claims under this bond may be addressed to the Surety at the following address:

U.S. Specialty Insurance Company

801 South Figueroa Street, Suite 700

Los Angeles, CA 90017

Attention: _____

Tel: (310) 649-0990

E-mail: _____

CALIFORNIA ALL-PURPOSE ACKNOWLEDGMENT **CIVIL CODE § 1189**

A notary public or other officer completing this certificate verifies only the identity of the individual who signed the document to which this certificate is attached, and not the truthfulness, accuracy, or validity of that document.

State of California)
County of NAPA)

On AUGUST 25, 2025 before me, K. M. WILLBACK, NOTARY PUBLIC,
Date *Here Insert Name and Title of the Officer*

personally appeared BRYAN RICHMOND
Name(s) of Signer(s)

who proved to me on the basis of satisfactory evidence to be the person(s) whose name(s) is/are subscribed to the within instrument and acknowledged to me that he/she/they executed the same in his/her/their authorized capacity(ies), and that by his/her/their signature(s) on the instrument the person(s), or the entity upon behalf of which the person(s) acted, executed the instrument.

I certify under PENALTY OF PERJURY under the laws of the State of California that the foregoing paragraph is true and correct.

WITNESS my hand and official seal.

K. M. WILLBACK
Notary Public - California
Napa County
Commission # 2391237
My Comm. Expires Feb 14, 2026

Signature _____
Signature of Notary Public

Place Notary Seal Above

OPTIONAL

Though this section is optional, completing this information can deter alteration of the document or fraudulent reattachment of this form to an unintended document.

Description of Attached Document

Title or Type of Document: _____ Document Date: _____

Number of Pages: _____ Signer(s) Other Than Named Above: _____

Capacity(ies) Claimed by Signer(s)

Signer's Name: _____
☐ Corporate Officer — Title(s): _____
☐ Partner — ☐ Limited ☐ General
☐ Individual ☐ Attorney in Fact
☐ Trustee ☐ Guardian or Conservator
☐ Other: _____
Signer Is Representing: _____

Signer's Name: _____
☐ Corporate Officer — Title(s): _____
☐ Partner — ☐ Limited ☐ General
☐ Individual ☐ Attorney in Fact
☐ Trustee ☐ Guardian or Conservator
☐ Other: _____
Signer Is Representing: _____

©2014 National Notary Association • www.NationalNotary.org • 1-800-US NOTARY (1-800-876-6827) Item #5907

TOKIO MARINE HCC

POWER OF ATTORNEY

KNOW ALL MEN BY THESE PRESENTS:

That American Contractors Indemnity Company of the State of California, a California corporation, does hereby appoint,

BRYAN RICHMOND

its true and lawful Attorney-in-Fact, with full authority to execute on its behalf bond number BB2026034, issued in the course of its business and to bind the Company thereby, in an amount not to exceed Three million and 00/100 ($3,000,000.00).

This Power of Attorney is granted and is signed and sealed by facsimile under and by the authority of the following resolutions adopted by the Board of Directors of AMERICAN CONTRACTORS INDEMNITY COMPANY at a meeting duly called and held on the 1st day of September, 2011.

"Be it Resolved, that the President, any Vice-President, any Assistant Vice-President, any Secretary or any Assistant Secretary shall be and is hereby vested with full power and authority to appoint any one or more suitable persons as Attorney(s)-in-Fact to represent and act for and on behalf of the Company subject to the following provisions:

Attorney-in-Fact may be given full power and authority for and in the name of and on behalf of the Company, to execute, acknowledge and deliver, any and all bonds, recognizances, contracts, agreements or indemnity and other conditional or obligatory undertakings, including any and all consents for the release of retained percentages and/or final estimates on engineering and construction contracts, and any and all notices and documents canceling or terminating the Company's liability thereunder, and any such instruments so executed by any such Attorney-in-Fact shall be binding upon the Company as if signed by the President and sealed and effected by the Corporate Secretary.

Be it Resolved, that the signature of any authorized officer and seal of the Company heretofore or hereafter affixed to any power of attorney or any certificate relating thereto by facsimile, and any power of attorney or certificate bearing facsimile signature or facsimile seal shall be valid and binding upon the Company with respect to any bond or undertaking to which it is attached."

The Attorney-in-Fact named above may be an agent or a broker of the Company. The granting of this Power of Attorney is specific to this bond and does not indicate whether the Attorney-in-Fact is or is not an appointed agent of the Company.

IN WITNESS WHEREOF, American Contractors Indemnity Company has caused its seal to be affixed hereto and executed by its President on this 20th day of November, 2024.

AMERICAN CONTRACTORS INDEMNITY COMPANY

By: _____
Adam S. Pessin, President

A Notary Public or other officer completing this certificate verifies only the identity of the individual who signed the document to which this certificate is attached, and not the truthfulness, accuracy, or validity of that document.

State of California
County of Los Angeles

On this 20th day of November, 2024, before me, D. Littlefield, a notary public, personally appeared Adam S. Pessin, President of American Contractors Indemnity Company, who proved to me on the basis of satisfactory evidence, to be the person whose name is subscribed to the within instrument and acknowledged to me that he executed the same in his authorized capacity, and that by his signature on the instrument the person, or the entity upon behalf of which the person acted, executed the instrument.

I certify under PENALTY OF PERJURY under the laws of the State of CALIFORNIA that the foregoing paragraph is true and correct.

WITNESS my hand and official seal.

Signature _____ (seal)

D. LITTLEFIELD
Notary Public - California
Los Angeles County
Commission # 2478570
My Comm. Expires Jan 31, 2028

I, Kio Lo, Assistant Secretary of American Contractors Indemnity Company, do hereby certify that the Power of Attorney and the resolution adopted by the Board of Directors of said Company as set forth above, are true and correct transcripts thereof and that neither the said Power of Attorney nor the resolution have been revoked and they are now in full force and effect.

IN WITNESS WHEREOF, I have hereunto set my hand and affixed the seals of said Companies at Los Angeles, California this 25th day of August, 2025.

Bond No. BB2026034
Agency No. 4496

Kio Lo, Assistant Secretary

Attachment B

PROPOSER STATEMENT

This Proposer Statement must be signed and returned along with the Proposal

- Our all-inclusive proposal is submitted as detailed in the Cost Proposal.
- All required attachments are included with this statement sheet.
- The signature affixed hereon and dated certifies compliance with all the requirements of this proposal document. The signature below authorizes the verification of this statement.

1. Company Name	2. Telephone Number	2a. Fax Number
Woida Enterprise dba Arrow Fencing	( ) 707 485-1128	( ) chrise arrowfencingca.com
3. Address: P.O. Box 385 Calpella Ca 95418		
4. Email Address: Chrise arrowfencingca.com		
Indicate your organization type: 5. ☐ Sole Proprietorship	6. ☐ Partnership	7. ☑ Corporation
8. CSLB No: 585041	C13 - D-28	9. DIR No: Exp 6/27 1000022055
10. Indicate applicable license and/or certification information: C-13, D28, DIR, Certified SB # 1324		
11. Proposer's Name (Print): Chris Woida	12. Title: President & Secretary	
13. **Signature**	14. Date: 9/17/25	

By submitting a proposal, the proposer acknowledges that he/she has acquainted themselves with the terms, scope, and requirements of the project based on the information contained in this RFP and any addendums. Any failure by the proposer to acquaint him or herself with available information will not relieve them from the responsibility of estimating properly the difficulty or cost of successfully performing the work. The County is not responsible for any conclusions or interpretations made by the proposer on the basis of the information made available by the County.

The following addendums have been acknowledged and are included in our proposal. RFPs that do not acknowledge addendums may be rejected.

Addendum # 1 Initials: CW

Addendum # 2 Initials: CW

Addendum # 3 Initials: CW

STATE OF CALIFORNIA
Office of the Secretary of State
STATEMENT OF INFORMATION
CORPORATION

California Secretary of State
1500 11th Street
Sacramento, California 95814
(916) 657-5448

For Office U

-FILE

File No.: BA2024137
Date Filed: 7/29/202

Entity Details

Corporation Name	WOIDA ENTERPRISES INC.
Entity No.	2497460
Formed In	CALIFORNIA

Street Address of Principal Office of Corporation

Principal Address	9711 B NORTH STATE ST REDWOOD VALLEY, CA 95470

Mailing Address of Corporation

Mailing Address	PO BOX 385 CALPELLA, CA 95418
Attention	

Street Address of California Office of Corporation

Street Address of California Office	9711 B NORTH STATE ST REDWOOD VALLEY, CA 95470

Officers

Officer Name	Officer Address	Position(s)
CHRIS J WOIDA	7819 UVA DR REDWOOD VALLEY, CA 95470	Chief Executive Officer, Chief Financial Office
+ Chris Woida	9711 B NORTH STATE ST REDWOOD VALLEY, CA 95470	Secretary

Additional Officers

Officer Name	Officer Address	Position	Stated Positio
None Entered			

Directors

Director Name	Director Address
CHRIS J WOIDA	7819 UVA DR REDWOOD VALLEY, CA 95470

The number of vacancies on Board of Directors is: 0

Agent for Service of Process

Agent Name	CHRIS J WOIDA
Agent Address	7819 UVA DR

249/460

ENDORSED - FIL
In the office of the Secretary of
of the State of California
FEB - 7 2003
KEVIN SHELLEY
Secretary of Stat

ARTICLES OF INCORPORATION OF WOIDA ENTERPRISES INC.

FIRST: The name of this corporation is WOIDA ENTERPRISES INC.

SECOND: The purpose of the corporation is to engage in any lawful act or activity for which a corporation may be organized under the General Corporation Law of California other than the banking business, the trust company business, or the practice of a profession permitted to be incorporated by the California Corporations Code.

THIRD: The name and complete business address of the corporation's initial agent for service of process is:

J. CHRISTOPHER WOIDA
501 Laughlin Way
Redwood Valley, California 95470.

FOURTH: The total number of shares which the corporation is authorized to issue is 1,000. The corporation shall have only one class of stock, which shall be designated "common" shares.

FIFTH: The number of authorized directors of this corporation is one. The name and address of the initial director is J. CHRISTOPHER WOIDA at 501 Laughlin Way, Redwood Valley, California 95470.

SIXTH: The liability of the director(s) of this corporation for monetary damages shall be eliminated to the fullest extent permissible under California law.

Dated: January 2⁰, 2003

J. CHRISTOPHER WOIDA, Incorporator

I declare that I am the person who executed the above Articles of Incorporation, and such instrument is my act and deed.

J. CHRISTOPHER WOIDA, Incorporator

OFFICE OF THE SECRETARY OF STATE

Secretary of State
Certificate of Status

I, SHIRLEY N. WEBER, PH.D., California Secretary of State, hereby certify:

Entity Name:	WOIDA ENTERPRISES INC.
Entity No.:	2497460
Registration Date:	02/07/2003
Entity Type:	Stock Corporation - CA - General
Formed In:	CALIFORNIA
Status:	Active

The above referenced entity is active on the Secretary of State's records and is authorized to exercise all its powers, rights and privileges in California.

This certificate relates to the status of the entity on the Secretary of State's records as of the date of this certificate and does not reflect documents that are pending review or other events that may impact status.

No information is available from this office regarding the financial condition, status of licenses, if any, business activities or practices of the entity.

IN WITNESS WHEREOF, I execute this certificate and affix the Great Seal of the State of California this day of February 11, 2025.

SHIRLEY N. WEBER, PH.D.
Secretary of State

Certificate No.: 295039634

To verify the issuance of this Certificate, use the Certificate No. above with the Secretary of State Certification Verification Search available at **biz**fileOnline.sos.ca.gov.

California Secretary of State

Business Programs Division
1500 11th Street, Sacramento, CA 95814

WOIDA ENTERPRISES INC.
PO BOX 385
CALPELLA, CA 95418

Business Amendment Filing Approved

November 22, 2024

Entity Name: WOIDA ENTERPRISES INC.
Entity Type: Stock Corporation - CA - General
Entity No.: 2497460
Document Type: Statement of Information
Document No.: BA20242048911
File Date: 11/22/2024

The above referenced document has been approved and filed with the California Secretary of State. To access free copies of filed documents, go to **biz**fileOnline.sos.ca.gov and enter the entity name or entity number in the Search module.

What's Next?

The most up to date records may be obtained by searching for the Entity Name or Entity Number in the Search module at **biz**fileOnline.sos.ca.gov.

For further assistance, contact us at (916) 657-5448 or visit **biz**fileOnline.sos.ca.gov.

Thank you for using **biz**file California, the California Secretary of State's business portal for online filings, searches, business records, and additional resources.

BA20242048911

STATE OF CALIFORNIA
Office of the Secretary of State
STATEMENT OF INFORMATION
CORPORATION

California Secretary of State
1500 11th Street
Sacramento, California 95814
(916) 657-5448

For Office Use Only

-FILED-

File No.: BA20242048911
Date Filed: 11/21/2024

Entity Details

Corporation Name	WOIDA ENTERPRISES INC.
Entity No.	2497460
Formed In	CALIFORNIA

Street Address of Principal Office of Corporation

Principal Address	9711 B NORTH STATE ST REDWOOD VALLEY, CA 95470

Mailing Address of Corporation

Mailing Address	PO BOX 385 CALPELLA, CA 95418
Attention	

Street Address of California Office of Corporation

Street Address of California Office	9711 B NORTH STATE ST REDWOOD VALLEY, CA 95470

Officers

Officer Name	Officer Address	Position(s)
Chris Woida	9711 B NORTH STATE ST REDWOOD VALLEY, CA 95470	Secretary
CHRIS J WOIDA	7819 UVA DR REDWOOD VALLEY, CA 95470	Chief Executive Officer, Chief Financial Officer

Additional Officers

Officer Name	Officer Address	Position	Stated Position
None Entered			

Directors

Director Name	Director Address
CHRIS J WOIDA	7819 UVA DR REDWOOD VALLEY, CA 95470

The number of vacancies on Board of Directors is: 0

Agent for Service of Process

Agent Name	CHRIS J WOIDA
Agent Address	7819 UVA DR REDWOOD VALLEY, CA 95470

Type of Business

Type of Business	Woida Enterprises Inc dba Arrow Fencing

Email Notifications

Opt-in Email Notifications	Yes, I opt-in to receive entity notifications via email.

Labor Judgment

B3213-6279 11/22/2024 9:34 AM Received by California Secretary of State

Acceptance of the attached Terms & Conditions:

Project: Colusa County Sheriff's Office Fencing Project

Reference: Attachment C, Fencing Contract (Pages 15-21) Attached

I, Chris Woida, President and Secretary of Woida Enterprises Inc dba Arrow Fencing, do accept the terms and conditions set forth in the attached document referenced as "Attachment C Fencing Contract" For the project titled as Colusa County Sheriff's Office Fencing Project. No exceptions are taken or noted.

Contractor: Woida Ent. Inc dba Arrow Fencing

Signed: Chris Woida President **Dated:** 9/24/25

Signed: Chris Woida Secretary **Dated:** 9/24/25

Attachment: Attachment C Fencing Contract

Attachment C
Fencing Contract

This public works construction contract ("Contract") is between the County of Colusa ("County"), a political subdivision of the State of California and _____ ("Contractor"), a California Corporation, LLC, etc. This is a public works contract subject to Department of Industrial Relations registration, and payment of prevailing wage.

1. **Services to be Performed:** Contractor agrees at its own expense to furnish all equipment, labor and materials necessary to provide County with design, procurement and installation for security fencing located at 929 Bridge St., Colusa, California as more specifically detailed in Attachment "A." Additionally, all terms and conditions of the Request for Proposals (RFP) and all documents submitted in response to the RFB are incorporated into the terms and conditions of this contract.

2. **Term:** All work under this contract shall be completed no later than March 6, 2026.

3. **Compensation:** County will pay Contractor compensation not to exceed $_____, as provided for in Attachment "B." Compensation will be paid in accordance with paragraph 4, Method of Payment.

    A. **Retention for Contracts that Exceed $5,000:** Pursuant to California Public Contract Code section 9203(a), for public works contracts that exceed $5,000, an amount of 5% shall be withheld from the invoices submitted by the Contractor as retention money to be utilized in case of default or defective materials, equipment, supplies, work or service not rectified by the Contractor. The retention money shall be paid over to the Contractor upon the receipt of a Certificate of Completion.

4. **Method of Payment:** At the conclusion of the job, Contractor shall provide County with an invoice for the services and lump sum bid. Upon receipt of an invoice, County shall process payment to Contractor as provided for by County's established policies and procedures, and payment will be issued accordingly for undisputed invoices.

    A. **Invoices shall:**
        1) Be prepared on Contractor's letterhead.
        2) Bear Contractor's name as shown on the contract.
        3) Bear the contract number.
        4) Itemize the costs incurred.
        5) Include a summary of the services provided.
        6) Be signed by an authorized official, employee, or agent certifying that the claim represents actual expenses for the services performed under this Contract.

5. **Professional Ability of Contractor and Standards of Performance:** Contractor represents that it is qualified and licensed to perform the services to be done as required in this Contract. County relies upon the representations of Contractor regarding professional training, licensing, and ability to perform the services as a material inducement to enter into this Contract.

    A. Services shall be provided by Contractor without the advice, control or supervision of County. Contractor shall have sole discretion and control of Contractor's services and the manner in which they are performed.

    B. Acceptance of work or payment of invoice by County does not operate to release

Contractor from any responsibility to perform work to professional standards.

C. Contractor shall provide properly skilled professional and technical personnel to perform all services under this Contract.

6. **Contractor's Books and Records:** Contractor shall maintain any and all ledgers, books of account, invoices, vouchers, canceled checks, and other records or documents evidencing or relating to charges for services, or expenditures and disbursements charged to County for a minimum period of 5 years, or for any longer period required by law, following audit, or from the date of final payment to Contractor under this Contract, whichever is later.

   A. Contractor shall maintain all documents and records which demonstrate performance under this Contract for a minimum period of 5 years, or for any longer period required by law, from the date of termination or completion of this Contract.

   B. Any records or documents required to be maintained pursuant to this Contract shall be made available for inspection or audit at any time during regular business hours, upon written request by County Counsel or other designated representative of County. Copies of such documents shall be provided to County for inspection at the office of the requesting county officer unless it is impractical to do so; in which case the records shall be made available at Contractor's address indicated for receipt of notices in this Contract.

   C. Where County has reason to believe that such records or documents may be lost or discarded due to dissolution, disbandment, or termination of Contractor's business, County may, on written request, require that custody of the records be given to County and that the records and documents be maintained by County at the Board of Supervisors offices. Access to such records and documents shall be granted to any party authorized by Contractor, Contractor's representatives, or Contractor's successor-in-interest.

7. **Independent Contractor:** Contractor is an independent contractor, not an employee of County. Nothing contained in this Contract, or any document executed in connection with this Contract, shall be construed to create an employer-employee, partnership or joint venture relationship between County and Contractor nor to allow County to exercise discretion or control over the manner in which Contractor performs the work or services that are the subject matter of this Contract; provided, however, the work or services to be provided by Contractor shall be provided in a manner consistent with reaching County's objectives in entering this Contract.

8. **Debarment and Suspension:**

   A. **Certification Regarding Debarment:** By signing this Contract, the Contractor certifies that neither the Contractor nor any of its principals are currently debarred or suspended by any Federal department or agency.

   B. **Certification of Lower Tier Contractors Regarding Debarment:** By administering any lower-tier subcontract exceeding $25,000 as a covered transaction under this Contract, the Contractor certifies that:

      1) The Contractor has verified that each lower-tier subcontractor participating in a covered transaction is not presently debarred or suspended from participation in this Contract by any Federal department or agency.

2) Prior to entering into any lower-tier subcontract exceeding $25,000, the Contractor shall require each proposed subcontractor to disclose, in writing, whether, as of the time of award of the subcontract, the subcontractor or its principals is debarred or suspended by the Federal Government. The Contractor may accomplish this by:

   a) Checking the System for Award Management at website: http://www.sam.gov.
   b) Collecting a certification statement similar to the Certification Regarding Debarment, above.
   c) Inserting a clause or condition in the covered transaction with the lower tier contract.

9. **Indemnity and Liability:** Each party shall indemnify, defend, and hold the other party and its directors, officers, employees, and agents harmless against any claims of any kind, arising or alleged to arise out of the willful misconduct, negligent acts, omissions, or violations of law by the party.

10. **Insurance:** Contractor, at its own cost, agrees to maintain, for the duration of this Contract, the following insurance policies with insurers possessing a Best's rating of no less than A:VII:

A. **Workers' Compensation Coverage:** Contractor shall maintain Workers' Compensation Insurance and Employer's Liability Insurance for its employees in accordance with the laws of the State of California. In addition, Contractor shall require each subcontractor to similarly maintain Workers' Compensation Insurance and Employer's Liability Insurance in accordance with the laws of the State of California for all of the subcontractors' employees. Any notice of cancellation or non-renewal of all Workers' Compensation policies must be received by County at least 30 days prior to such change.

B. **General Liability Coverage:** Contractor shall maintain commercial general liability insurance in an amount of not less than $1,000,000 per occurrence for bodily injury, personal injury, and property damage. If a commercial general liability insurance form or other form with a general aggregate limit is used, either the general aggregate limit shall apply separately to the work to be performed under this Contract or the general aggregate limit shall be at least twice the required occurrence limit.

C. **Automobile Liability Coverage:** Contractor shall maintain automobile liability insurance covering bodily injury and property damage for all activities of the contractor arising out of or in connection with the work to be performed under this Contract, including coverage for owned, hired, and non-owned vehicles, in an amount of not less than $1,000,000 for each accident for bodily injury or property damage.

D. **Policy Endorsements:** All insurance, except workers' compensation, shall include an endorsement or an amendment to the policy of insurance:

   1) Naming County, its elected officials, officers, employees, agents and volunteers as additional named insureds with respect to liability arising out of any and all work performed by or on behalf of the Contractor under this Contract;

   2) Providing that Contractor's insurance shall be the primary insurance as respects

County, its elected or appointed officers, officials, employees, agents and volunteers. Any insurance maintained by County, including any self-insured retention County may have, shall not be called upon to contribute to a loss covered by Contractor's insurance;

3) Providing the policy of insurance shall act for each insured and additional insureds as though a separate policy had been written for each, except with respect to the limits of liability of the insuring company;

4) Providing that the insurer waives all rights of subrogation against County, its elected or appointed officers, officials, employees, agents or volunteers;

5) Providing any failure to comply with the reporting provisions of the policy of insurance shall not affect coverage provided to County, its elected or appointed officers, officials, employees agents, or volunteers;

6) Providing broad-form contractual liability coverage insuring contractor's indemnity obligations under this contract; and

7) Providing that coverage under the policy shall not be suspended, voided, reduced or cancelled in coverage or in limits without 30 days written notice certain to County.

E. Deductibles and Self-insured Retentions: Any deductibles or self-insured retentions must be declared to and approved by County before work begins. At County's option, Contractor shall demonstrate financial capability for payment of such deductibles or self-insured retentions.

F. Proof of Coverage: At the time of execution of this contract, Contractor shall furnish County with copies of its insurance policies and endorsements affecting coverage required by this Contract.

11. Guarantees:

A. The Contractor shall guarantee all services provided in fulfillment of paragraph 1 above, and shall require each Subcontractor to guarantee their own work, against defective material or faulty workmanship for a minimum of one year after the date of Notice of Completion is issued. In addition, all standard manufacturer warranties shall be passed to the County which may extend the warranty period beyond one year.

B. The County retains all rights and remedies provided by law including those pertaining to latent defects.

C. If repairs are required in connection with guaranteed work, the Contractor shall promptly upon receipt of notice from the County, and without expense to the County:

1) Place in satisfactory condition in every detail all of such guaranteed work.

2) Make good all damage to the building, site, equipment, furniture, or contents which, in the opinion of the County, is the result of work not in accordance with

the terms of the Contract Documents or disturbed in the process of correcting guaranteed work.

D. If the Contractor disturbs any work guaranteed under another contract in fulfilling the requirements herein they shall restore such disturbed work to a condition satisfactory to the County and guarantee such restored work to the same extent as it was guaranteed under such other contract.

E. A new full-term guarantee period shall apply to repaired work upon completion of repairs.

F. If Contractor fails to proceed to comply with the terms of the guarantee or make repairs of defective work within 7 days of Notice from County, the County may remedy the Contractor's failure by whatever means the County deems expedient. The County may, at any time, take measures to mitigate damage or reduce undesirable effects of defective work. All costs expended by County pursuant to this Section shall be paid by Contractor.

12. **Liquidated Damages:** The parties agree that should the work not be complete, as acknowledged with an executed Notice of Completion within the Term as specified in paragraph 2 above, damages will be sustained by the County. It is understood and agreed that it is or may be impracticable or extremely difficult to determine the actual amount of damages the County will sustain in the event of and by reason of such delay in completing the work; and it is therefore agreed that the Contractor will pay the County $250 per day for the County's liquidated damages. In the event the Contractor fails to make such payment, the County may deduct the amount thereof from any money due or that may become due the Contractor under the Contract and should the balance due not be sufficient to cover the amount owed, the County shall have the right to recover the balance from the Contractor, from other contracts between Contractor and County, or from the Contractor's sureties or any other means as allowed by law.

13. **Performance Standards:** Contractor shall use the standard of care in its profession and comply with all applicable federal, state and local laws, codes, ordinances and regulations.

14. **Department of Industrial Relations Registration:** Contractors and subcontractors shall register with the California Department of Industrial Relations (DIR) pursuant to California Labor Code sections 1771.1 and 1725.5. Contractors and any subcontractors shall supply County with a copy of proof of registration at the time of execution of this Contract.

15. **Prevailing Wage:** This Contract is subject to prevailing wage rates. Copies of the prevailing rates or per diem wages applicable to this Project are available from the California Department of Labor Statistics and Research at www.dir.ca.gov/dlsr/PWD/index.htm or 455 Golden Gate Avenue, 9th Floor, San Francisco, California 94102 (415) 703-4780. Contractor is required to post a copy of the wage rates on the job site. Any employee whose type of work is not covered by any of the classified wage rates shall be paid not less than the rate of wage listed for the classification which most nearly corresponds to the type of work to be performed. Pursuant to California Labor Code section 1775, Contractor, and any subcontractor, shall forfeit up to $200.00 per calendar day, or portion of a day, for each worker paid less than the prevailing rates for such work or craft, and the penalty shall be imposed and distributed pursuant to Section 1775.

16. **Payment Bond:** Pursuant to Chapter 5, of Title 3, of Part 6, of Division 4 of the California Civil Code, if the Contract compensation exceeds $25,000, Contractor shall, before commencement of any work, provide County with a payment bond equal to 100% of the compensation payable in accordance with this Contract to secure the Contractor's, and any subcontractor's, performance and

provide coverage for the services to be provided pursuant to this Contract by Contractor and any subcontractor.

17. **Payroll Records:** Contractor and all subcontractors shall keep accurate payroll records as required by California Labor Code section 1776.

    A. Upon written request by County, Contractor and all subcontractors shall, within ten (10) calendar days, provide County with a certified copy of all payroll records kept pursuant to Section 1776.

    B. Pursuant to Section 1776(h), Contractor and all subcontractors will be assessed a penalty of $100.00 for each calendar day, or portion thereof, for each worker if a certified copy of the records subject to Section 1776 are not made available as required by section 15 of this Contract.

    C. Contractors and any subcontractors shall furnish electronic payroll records to the California Labor Commissioner in accordance with California Labor Code section 1771.4.

18. **Licenses:** Contractor represents and warrants to County that it has all licenses, permits, qualifications, insurance, and approvals of whatsoever nature which are legally required of Contractor to practice its trade and/or profession. Contractor represents and warrants to County that Contractor shall, at its sole cost and expense, keep in effect or obtain at all times during the term of this Contract, any licenses, permits, insurance, and approvals which are legally required of Contractor to practice its trade and/or profession.

19. **Controlling Law Venue**: This Contract is made in the County of Colusa, State of California. The parties specifically agree to submit to the jurisdiction of the Superior Court of California for the County of Colusa.

20. **Written Notification**: Any notice, demand, request, consent, approval, or communication that either party desires or is required to give to the other party shall be in writing and either served personally or sent prepaid, first class mail. Any such notice, demand, etc., shall be addressed to the other party at the address set forth below. Either party may change its address by notifying the other party of the change of address. Notice shall be deemed communicated within 48 hours from the time of mailing if mailed as provided in this section.

If to County:	County of Colusa 547 Market St., Suite 102 Colusa, Ca, 95932

If to Contractor:

21. **Entire Contract**: This Contract constitutes the complete and exclusive statement of contract between County and Contractor. All prior written and oral communications, including **correspondence**, drafts, memoranda, and representations, are superseded in total by this Contract.

22. **Amendments**: This Contract may be modified or amended only by a written document executed by both Contractor and County and approved as to form by the County Counsel.

23. **Waiver**: No failure on the part of either party to exercise any right or remedy provided for by this Contract shall operate as a waiver of any other right or remedy that party may have.

24. **Execution**: This Contract may be executed in several counterparts, each of which shall constitute one and the same instrument and shall become binding upon the parties.

25. **Assignment & Subcontracting**: The parties recognize that a substantial inducement to County for entering into this Contract is the professional reputation, experience, and competence of Contractor. Assignments of any or all rights, duties or obligations of Contractor under this Contract will be permitted only with the express consent of County. Contractor shall not subcontract any portion of the work to be performed under this Contract without the written authorization of County. If County consents to such subcontract, Contractor shall be fully responsible to County for all acts or omissions of the subcontractor. Nothing in this Contract shall create any contractual relationship between County and subcontractor nor shall it create any obligation on the part of County to pay any monies due to any such subcontractor unless otherwise required by law.

26. **Termination**: This Contract may be terminated for the following reasons:

    A. Immediately for cause if either party violates any of the terms or provisions of this Contract; or

    B. By County without cause upon 15 days written notice of termination.

27. **Partial Invalidity**. If any provision of this Contract is held to be invalid, void, or unenforceable, the remainder of the provision and/or provisions shall remain in full force and effect and shall not be affected or invalidated.

28. **Attachments:** All attachments referred to are incorporated and made part of the Contract. Attachments include:

    A. Attachment "A" Project Specifications

COUNTY OF COLUSA

_____Date_____
Daurice K. Smith, Board Chair

APPROVED AS TO FORM

_____
Richard Stout, County Counsel

CONTRACTOR

_____Date_____
Signature

_____
Printed Name and Title

ATTEST: Wendy G. Tyler, Clerk of the Board of Supervisors

By _____
, Deputy

Attachment D

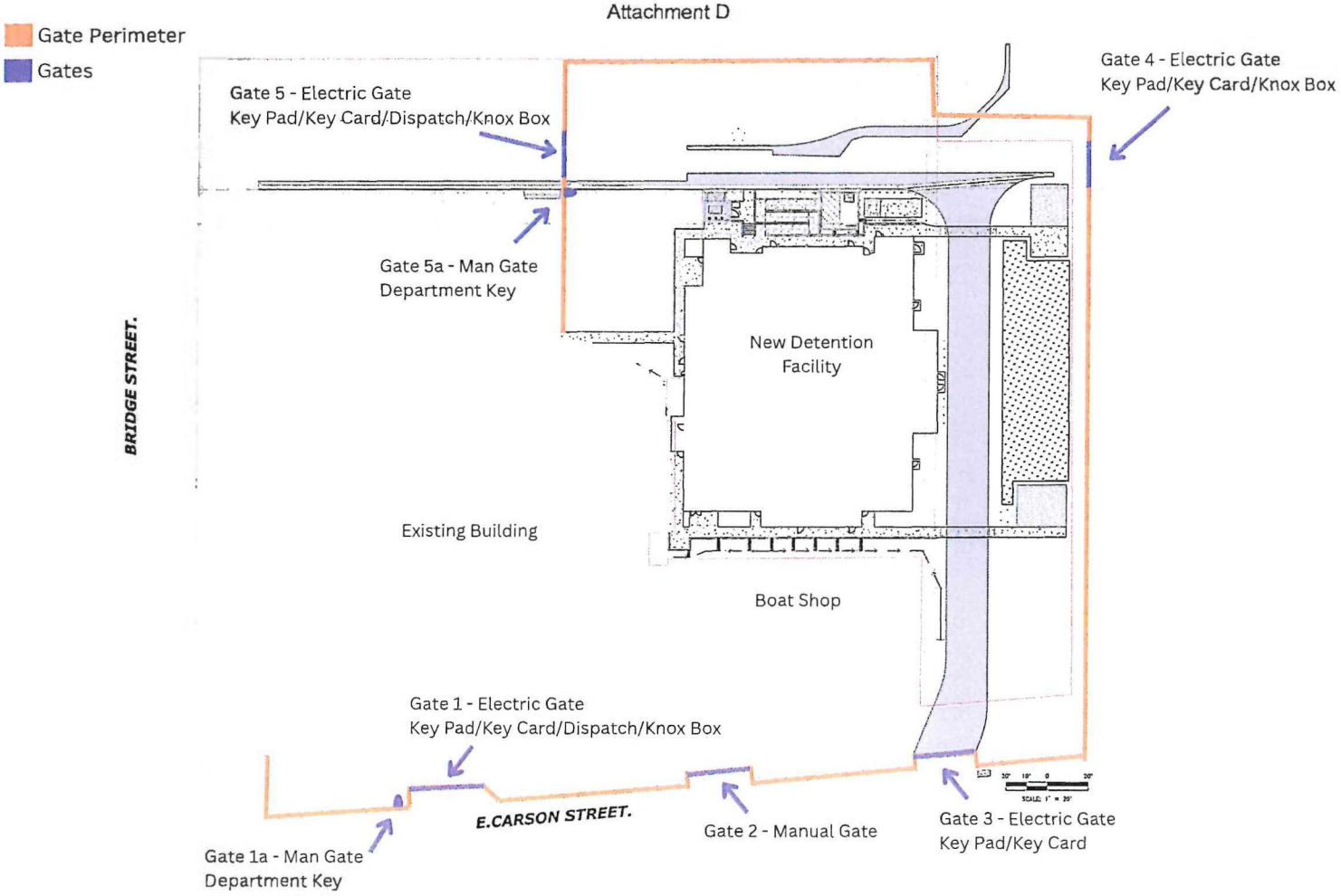

COUNTY OF COLUSA

PURCHASING AND PROCUREMENT

547 Market Street, Suite 110, Colusa, CA 95932

ADMINISTRATION
Rick Luigard, Purchasing Technician
(530) 458-0437

(530) 458-0437 . FAX (530) 458-0435

ADDENDUM TO RFP DOCUMENTS

REQUEST FOR PROSALS: RFP – Colusa County Sheriff's Office Fencing Project

ADDENDUM No. 1

DATE: 9/5/2025

To All Potential Proposers:

This addendum is issued to modify the previously issued documents and/or given for informational purposes and is hereby made a part of the proposal documents. Please attach this addendum to the documents in your possession. ***Proposer shall acknowledge receipt of any and all addenda at the bottom of this document.***

---

1. Deletion from Section 2 – Qualifications (page 2)

   Delete 'or C-13 Fence.'
   Proposers must possess a current CSLB General Engineering A or General Building B license.

2. Correction to Section 8 - the Timeline for this proposal (page 5)

Event	Date
Issuance of RFP	August 12, 2025
Site Walk	September 2, 2025 at 10:30am
2nd Site Walk (mandatory)	September 12, 2025 at 10:00am
Deadline for RFP questions	~~September 5, 2025 at 2:00pm~~ September 17, 2025 at 2:00pm
Questions and answers posted	~~September 9, 2025 at 5:00pm~~ September 19, 2025 at 5:00pm

COUNTY OF COLUSA

PURCHASING AND PROCUREMENT

547 Market Street, Suite 110, Colusa, CA 95932

ADMINISTRATION
Rick Luigard, Purchasing Technician
(530) 458-0437

(530) 458-0437 . FAX (530) 458-0435

Deadline for proposal submission	~~September 12, 2025 at 4:00pm~~ September 26, 2025 at 4:00pm
Potential interview dates	TBD
Board Approval	~~October 7, 2024~~ November 4, 2024
Contract Start Date	~~October 7, 2024~~ November 4, 2024

3. A second mandatory site walk will be held on Friday, September 12, 2025 at 10:00 am to provide for additional sub-contractors to visit the site. A representative from Integrated Security Controls, Inc. will be present.

4. All references to the due date are revised to reflect September 26, 2025 at 4:00pm.

5. All references to the contract start date are revised to reflect November 4, 2024.

6. All references to the deadline for RFP questions are revised to reflect September 17, 2025 at 2:00pm. Only questions submitted by Proposers who attended the mandatory walkthrough(s) will be answered.

7. Attachment D Site Map is deleted and replaced with a NEW Attachment D - Site Map.

8. Attachment A Project Specifications is deleted and replaced with a NEW Attachment A – Project Specifications.

AWKNOWLEDGEMENT OF ADDENDA

The undersigned Bidder acknowledges receipt of and use of the Addenda above in the preparation of this bid.

Addendum No.1, September 5, 2024

✓ 9/6/25

Signature Date

Chris Wnda

Print Name

Attachment A
Project Specifications

Colusa County Sheriff's Office Fencing Project
929 Bridge St., Colusa, Ca

Project Overview

This project includes the as-built design, procurement and installation of approximately 1,600 linear feet of chain link fencing, five (5) vehicle cantilever slide gates (including four (4) motorized gates and one (1) manual gate) and three (3) pedestrian access gates. Gate automation, safety devices, and access control systems will be installed per the specifications outlined below. Fence Layout is enclosed as Attachment D.

The project is to include 40 vehicle gate openers, keypads, 100 access key cards, fire box and control by dispatch accessibility to enter the facility only to authorized personnel.

The RFP intentionally defines the design process as an evolved, as-built system, rather than a fixed, fully predefined blueprint. This adaptive methodology allows for refinement of details and alignment with actual site conditions throughout the course of construction.

Fencing Specifications

- **Total Fence Length:** Approximately 1,600 linear feet of chain link fencing.
- **End Posts:**
  - 4" schedule 40 steel pipe, set in concrete footing (12" wide x 42" deep).
- **Line Posts:**
  - 2-7/8" schedule 40 steel pipe, spaced at 10 ft. intervals, set in 12" wide x 36" deep concrete footing.
- **Chain Link Fabric:**
  - 9-gauge galvanized steel, 1" mesh.
- **Top Rail and Mid-Rail (Corner Bracing):**
  - 1-5/8" Schedule 40 steel pipe.
- **Bottom Tension Wire:**
  - 7-gauge galvanized tension wire (coil type).
- Twist selvage on top of fence. No barb wire.
- Fence Height: include pricing for both 7' and 8' feet fence.

Pedestrian Gates

- **Quantity:** 3 pedestrian man gates (Gates 1a, 5a, and 5b).
- **Gate Frame:** 2" square steel tubing.
- **Posts:** 4" square steel posts.
- **Access Control:**
  - Gates 1a, 5a and5b will be accessible via department-issued keys.
- **Additional Features:**
  - Kickplate on "push" side.
  - Self-closing hinges.

- Panic hardware: Von Duprin 99 Series panic bars.

Vehicle Cantilever Slide Gates

- **Quantity:** 5 total gates for 30-foot openings.
  - **Gates 1, 3, 4, 5:** Motorized
  - **Gate 2:** Manual operation only
- **Manufacturer:** Tymetal or equivalent.
- **Type:** TIGER Cantilever Slide Gate or equivalent.
- **Gate Operator:** HySecurity Model HD30 (post-mounted on 4" posts) or equivalent.

Access Control Configuration:

- Gate 1: Exit only. Controlled by loop system, dispatch and vehicle gate openers. The gate may recess inward from property line.
- Gate 2: Exit only. Manual operation only. Swing or slide gate acceptable. The gate cannot be recessed off the property boundary.
- Gate 3: Exit only. Controlled by loop system only and vehicle gate openers. The gate may recess inward from property line.
- Gate 4: Controlled by vehicle gate openers.
- Gate 5: Main entry gate. Controlled by key pad, card reader, dispatch and vehicle gate openers. There needs to be an intercom for the driver to interact with dispatch.
- Gates 1, 3, 4 & 5:
  - Equipped with Knox Boxes for emergency Fire Department access.

Safety & Automation Features (Motorized Gates Only):

- **Photo Eye Sensors:**
  - Thru-beam photo eyes installed across each gate opening and along the fence line where gates slide.
- **Gate Safety Edges:**
  - Installed on posts at openings for collision detection.
- **Vehicle Detection Loops:**
  - Three (3) ground loops per motorized gate for exit, safety reversal, and entry activation.
  - Loop systems to be installed at Gates 1, 3, and 5 only.

General Requirements

- Contractor is responsible for layout, excavation, and proper concrete installation for all posts.
- Contractor is responsible for all electrical conduit and connections except for the recent conduit that was installed. Two 4" conduits have been installed for Gate 1.
- All concrete to meet a minimum of 3,000 psi.
- All materials shall comply with applicable local building codes and industry standards.
- Final walkthrough and performance testing are required before project closeout.
- Site must be cleared of construction debris and returned to original or better condition.
- This Project is funded by federal or federal-assisted infrastructure funds and is subject to the Build America, Buy America Act (BABA) requirements.

- Survey points to be provided for project boundaries to selected Proposer.

Deliverables

- Installation of all fencing and gates per specifications.
- Operational gate automation and access control systems, fully tested.
- Integration of safety and fire access systems.
- Upon completion of installation, the contractor shall submit comprehensive as-built documentation covering fencing, pedestrian and vehicle gates, access control devices, safety systems, electrical connections, photo sensors, vehicle loop detectors, and any site-specific modifications. The Contractor shall furnish and install junction boxes at each conduit termination point such that the top of each box is flush with the finished asphalt surface.
- Final inspection and sign-off.

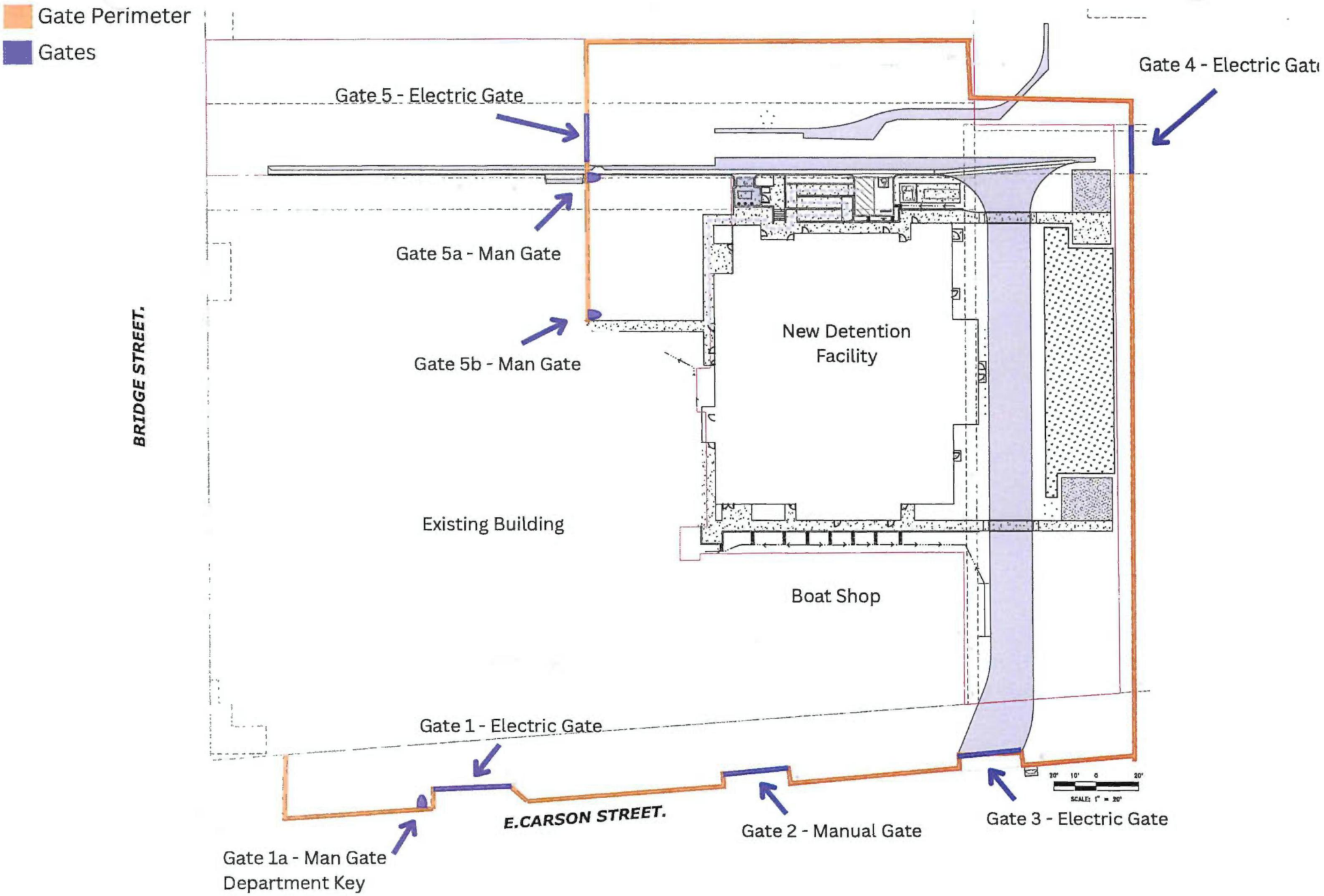
Gate Perimeter
Gates
Gate 5 - Electric Gate
Gate 4 - Electric Gat
Gate 5a - Man Gate
Gate 5b - Man Gate
New Detention Facility
BRIDGE STREET.
Existing Building
Boat Shop
Gate 1 - Electric Gate
E.CARSON STREET.
Gate 1a - Man Gate
Department Key
Gate 2 - Manual Gate
Gate 3 - Electric Gate

COUNTY OF COLUSA

PURCHASING AND PROCUREMENT

547 Market Street, Suite 110, Colusa, CA 95932

ADMINISTRATION
Rick Luigard, Purchasing Technician
(530) 458-0437

(530) 458-0437 . FAX (530) 458-0435

ADDENDUM TO RFP DOCUMENTS

REQUEST FOR PROSALS: RFP – Colusa County Sheriff's Office Fencing Project

ADDENDUM No. 2

DATE: 9/11/2025

To All Potential Proposers:

This addendum is issued to modify the previously issued documents and/or given for informational purposes and is hereby made a part of the proposal documents. Please attach this addendum to the documents in your possession. ***Proposer shall acknowledge receipt of any and all addenda at the bottom of this document.***

---

1. Correction to Section 2 – Qualifications (page 2)

   Proposers may hold a C-13 Fencing license, provided they comply with all applicable CSLB regulations.

AWKNOWLEDGEMENT OF ADDENDA

The undersigned Bidder acknowledges receipt of and use of the Addenda above in the preparation of this bid.

Addendum No.2, September 11, 2024

✓ _____ 9/12/25 _____

Signature Date

Chris Woida

Print Name

COUNTY OF COLUSA

PURCHASING AND PROCUREMENT

547 Market Street, Suite 110, Colusa, CA 95932

ADMINISTRATION
Rick Luigard, Purchasing Technician
(530) 458-0437

(530) 458-0437 . FAX (530) 458-0435

ADDENDUM TO RFP DOCUMENTS

REQUEST FOR PROPOSALS: RFP – Colusa County Sheriff's Office Fencing Project

ADDENDUM No. 3

DATE: 9/18/2025

To All Potential Proposers:

This addendum is issued to modify the previously issued documents and/or given for informational purposes and is hereby made a part of the proposal documents. Please attach this addendum to the documents in your possession. ***Proposer shall acknowledge receipt of any and all addenda at the bottom of this document.***

---

1. All references to the deadline for RFP questions are revised to reflect September 23, 2025 at 2:00pm.

2. All references to the deadline for Answers to RFP Questions are revised to reflect September 24, 2025 at 5:00pm.

3. The following changes/additions are made to the Project Specifications, Access Control Configuration:
   a. Gate 2: Exit only. Manual operation only. ~~Swing or slide gate acceptable~~. Double swing gate. The gate cannot be recessed off the property boundary.
   b. Gate 4: Controlled by vehicle gate openers and loop system.
   c. Gate 5: Main entry gate. Controlled by key pad, card reader, dispatch, loop system and vehicle gate openers. There needs to be an intercom for the driver to interact with dispatch.

4. The following addition is made to the Project Specifications, General Requirements:
   a. Wallace Safe & Lock Co., Inc. should be consulted for all door-lock and key work. This is the vendor the Sheriff's Department currently uses for its department-issued keys. Wallace Safe & Lock can be reached at (530) 666-2454 and is located in Woodland, California. If feasible, the Department requests that all new gate locks be keyed to match the existing Sheriff's Department key system.

5. The following changes are made to the Project Specifications, Pedestrian Gates:
   a. Delete - ~~Panic hardware: Von Duprin 99 Series panic bars.~~
   b. Under Additional Features, Add: Mammoth closer and Keyed Mortise Locks.

COUNTY OF COLUSA

PURCHASING AND PROCUREMENT

547 Market Street, Suite 110, Colusa, CA 95932

ADMINISTRATION
Rick Luigard, Purchasing Technician
(530) 458-0437

(530) 458-0437 . FAX (530) 458-0435

AWKNOWLEDGEMENT OF ADDENDA

The undersigned Bidder acknowledges receipt of and use of the Addenda above in the preparation of this bid.

Addendum No.3, September 18, 2024

Signature

9/22/25

Date

Chris Ubida

Print Name

Attachment D

Gate Perimeter

Gates

propsed electrical

4" bollard post every 6ft

direction of gate opening

fire hydroant

Call box

N9 cristy box

2 loop Exit / emergency

4" bollard post (x2)

Call box

alt power

Gate 5 - Electric Gate
Key Pad/Key Card/Dispatch/Knox Box

safty exit

safty exit

safty loop

safty loop

direction of gate opening

Gate 5a - Man Gate
Department Key

propsed electrical

New Detention
Facility

propsed electrical

Existing Building

Boat Shop

propsed electrical

N9 cristy box

Gate 1 - Electric Gate
Key Pad/Key Card/Dispatch/Knox Box

safty exit

direction of gate opening

4" bollard post every 6ft

safty exit

direction of gate

E.CARSON STREET.

Gate 2 - Manual Gate

Call box

safty loop

N9 cristy box

30ft double swing gate

safty loop

fire hydroant

BRIDGE STREET.

20' 10' 0 20'
SCALE: 1" = 20'

APPLICABLE CODES

UNLESS OTHERWISE INDICATED OR SPECIFIED, PERFORM THE WORK IN CONFORMANCE WITH THE LATEST EDITIONS OF ALL APPLICABLE REGULATORY REQUIREMENTS, INCLUDING, BUT NOT LIMITED TO, THE FOLLOWING:

1. CALIFORNIA BUILDING STANDARDS ADMINISTRATIVE CODE (PART 1, TITLE 24): 2022
2. CALIFORNIA BUILDING CODE (PART 2, TITLE 24): 2021 IBC WITH 2022 CA AMENDMENTS
3. CALIFORNIA ELECTRICAL CODE (PART 3, TITLE 24): 2020 NEC WITH 2022 CA AMENDMENTS
4. CALIFORNIA MECHANICAL CODE (PART 4, TITLE 24): 2021 UMC WITH 2022 CA AMENDMENTS
5. CALIFORNIA PLUMBING CODE (PART 5, TITLE 24) 2021 UPC WITH 2022 CA AMENDMENTS
6. CALIFORNIA ENERGY CODE (PART 6, TITLE 24): 2022
7. CALIFORNIA HISTORICAL BUILDING CODE, (PART 8, TITLE 24): 2022
8. CALIFORNIA FIRE CODE (PART 9, TITLE 24): 2021 IFC WITH 2022 CA AMENDMENTS
9. CALIFORNIA EXISTING BUILDING CODE (PART 10, TITLE 24): 2022 (2021 INTERNATIONAL EXISTING BUILDING CODE WITH 2022 CA AMENDMENTS)
10. CALIFORNIA GREEN BUILDING STANDARDS CODE OR CAL GREEN (PART 11, TITLE 24): 2022
11. CALIFORNIA REFERENCED STANDARDS CODE (PART 12, TITLE 24): 2022
12. PUBLIC SAFETY (CCR TITLE 19), STATE FIRE MARSHAL: CURRENT REVISION
13. NFPA 72, NATIONAL FIRE ALARM AND SIGNALING CODE, 2022 EDITION

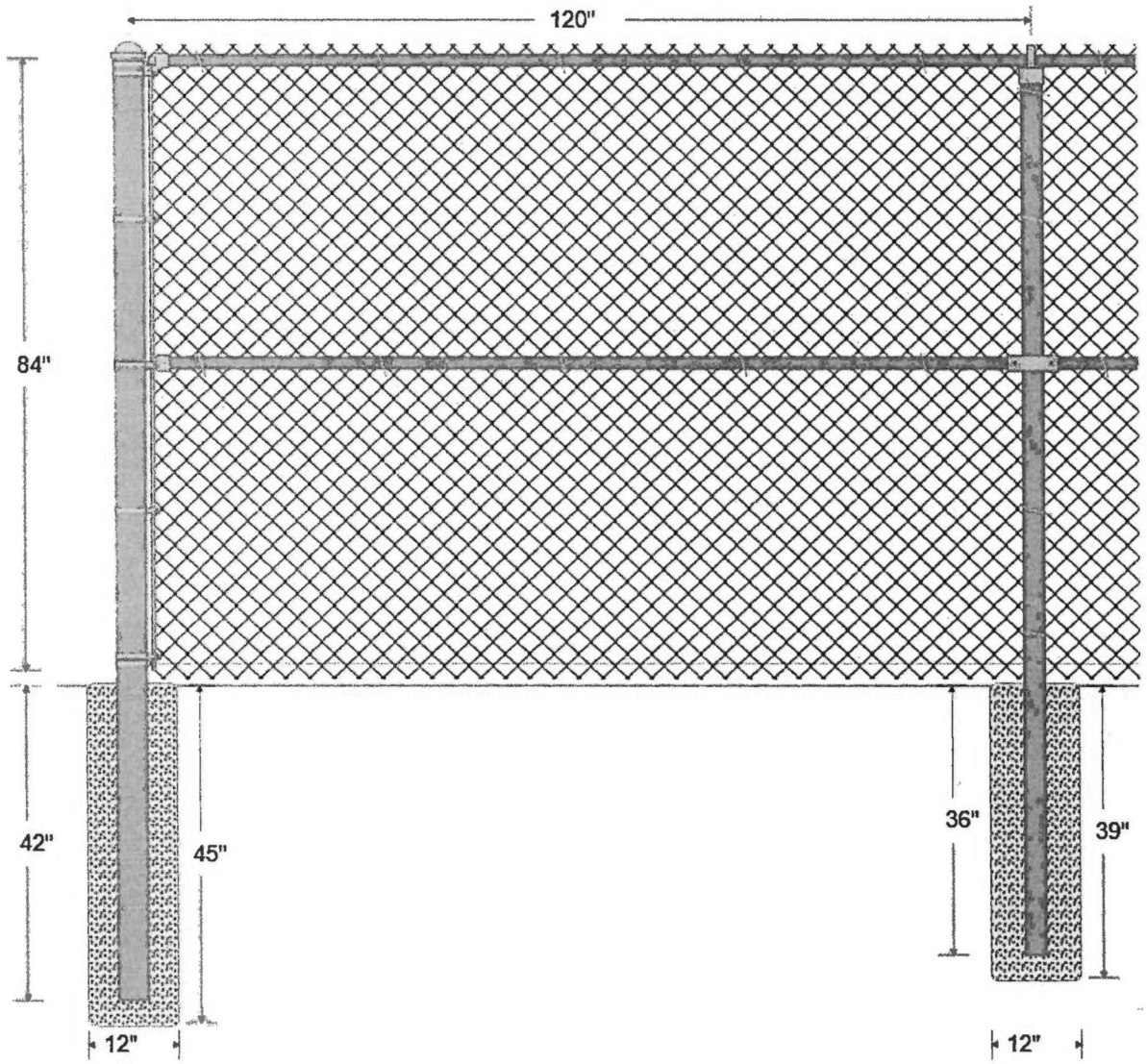

Fabric:

84" 9 GA GBW (1" Mesh) KK CHAIN-LINK FABRIC

Terminal Post:

4" X 10'6" LG-40 PIPE CUT POST

Terminal Post Depth: 42 in.

Line Post:

3" X 10' LG-40 PIPE CUT POST

Line Post Depth: 36 in.

Top Rail:

1 5/8" LG-40 PIPE 21'

Line Post Spacing: 120 in.

Tie Wire Spacing: 24 in.

Middle Rail:

1 5/8" LG-40 PIPE 21'

Bottom Tension Wire:

7 GA. COIL SPRING TENSION WIRE

Fence Cloud Estimate

Colusa jail 7ft

Arrow Fence
P.O. Box 385
Calpella, CA 95418
17074851128

Colusa Jail
jail
929 Bridge St
Colusa, CA 95932

Line of Fence 84" H

Drawn By: Joe Avila
Date: 09/16/25

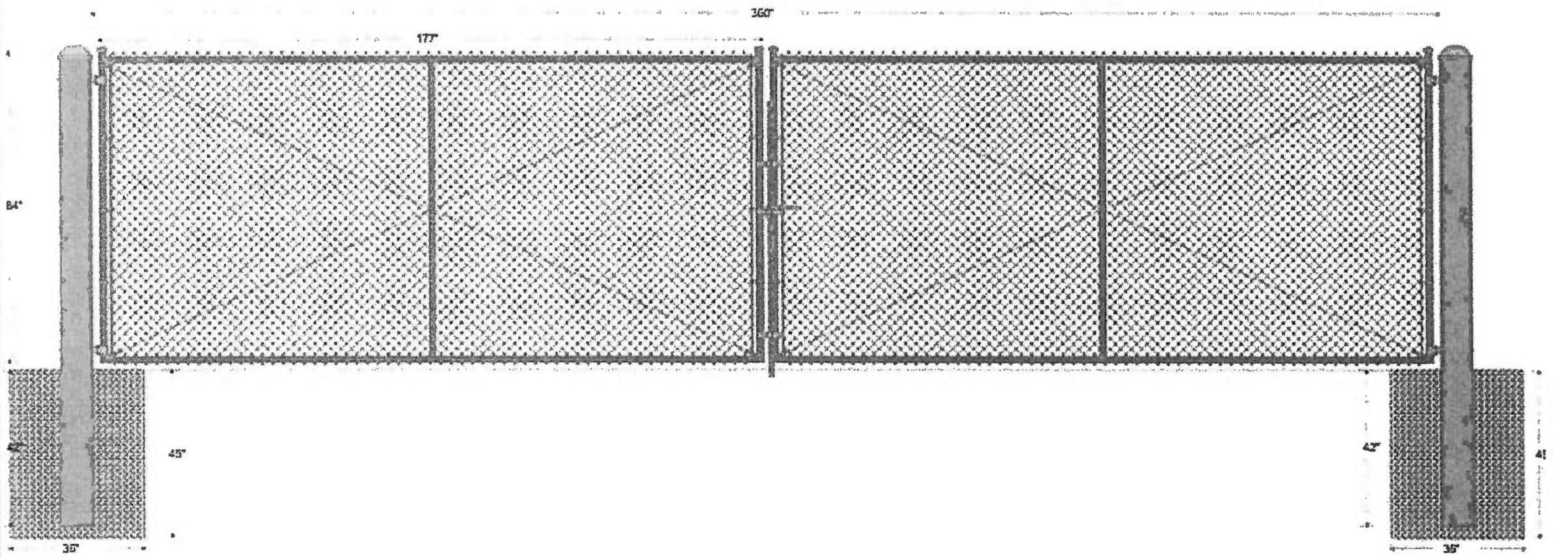

Fabric:

84" 9 GA GBW (1" Mesh) KK CHAIN-LINK FABRIC

Hinge Post:

8 5/8" X 10'6" IMPORT SCH 40 PIPE CUT POST

Hinge Post Depth: 42 in.

Gate Frame:

2" LG-40 PIPE 24'

Vertical Brace:

1 5/8" LG-40 PIPE 21'

Hinge:

8 5/8" X 2" PS INDUSTRIAL BULLDOG HINGE

Latch:

1 5/8" or 2" PS INDUSTRIAL DROP ROD ASSEMBLY

Tie Wire Spacing: 24 in.

Fence Cloud Estimate

Colusa jail 7ft

Arrow Fence
P.O. Box 385
Calpella, CA 95418
17074851128

Colusa Jail
jail
929 Bridge St
Colusa, CA 95932

Double Gate 84" H x 360" W

Drawn By: Joe Avila
Date: 09/16/25

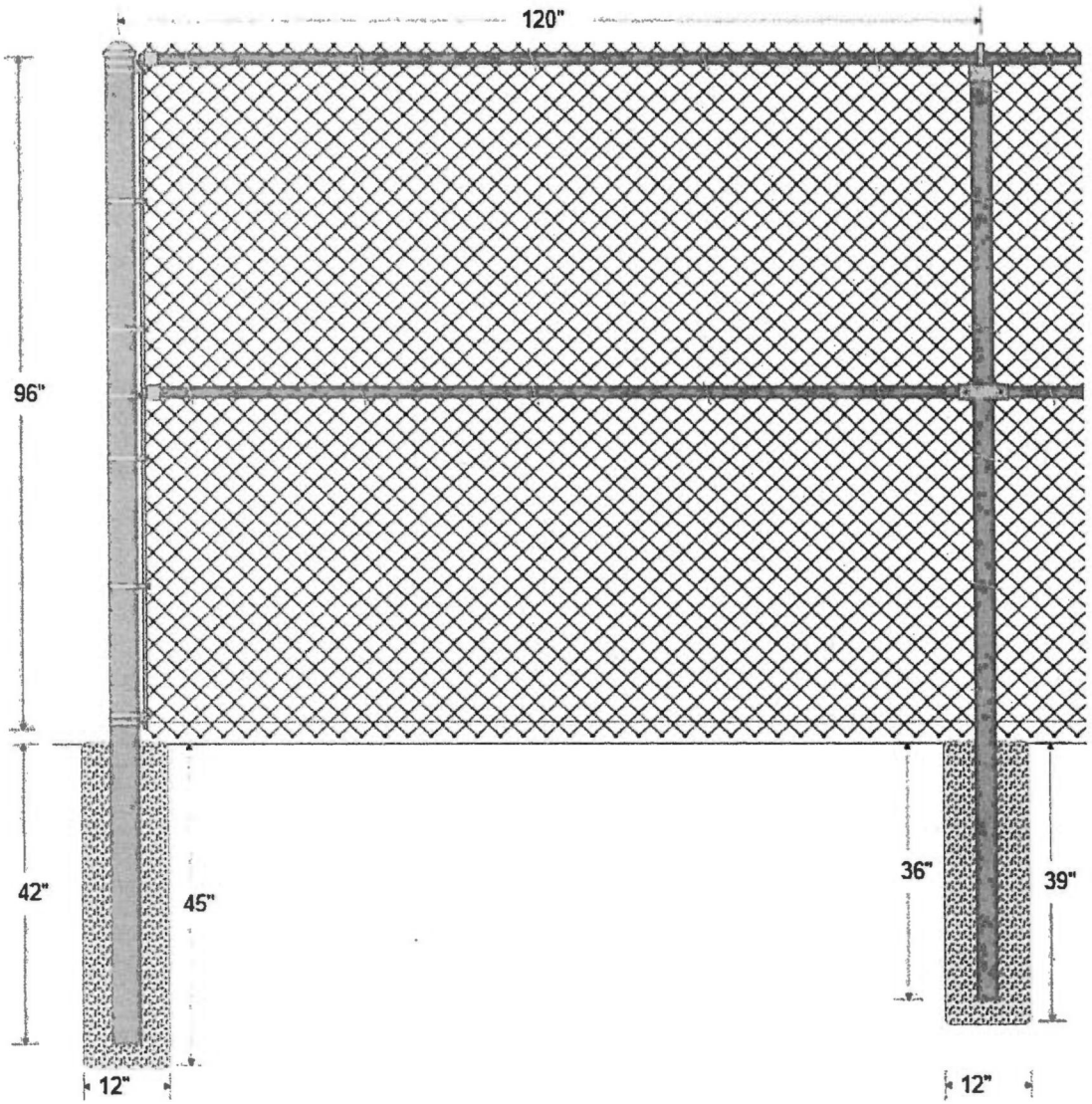

Fabric:

96" 9 GA GBW (1" Mesh) KK CHAIN-LINK FABRIC

Terminal Post:

4" X 11'6" LG-40 PIPE CUT POST

Terminal Post Depth: 42 in.

Line Post:

3" X 11' LG-40 PIPE CUT POST

Line Post Depth: 36 in.

Top Rail:

1 5/8" LG-40 PIPE 21'

Line Post Spacing: 120 in.

Tie Wire Spacing: 24 in.

Middle Rail:

1 5/8" LG-40 PIPE 21'

Bottom Tension Wire:

7 GA. COIL SPRING TENSION WIRE

Fence Cloud Estimate

Colusa Jail 8ft

Arrow Fence
P.O. Box 385
Calpella, CA 95418
17074851128

Colusa Jail
jail
929 Bridge St
Colusa, CA 95932

Line of Fence 96" H

Drawn By: Chris Woida
Date: 09/16/25

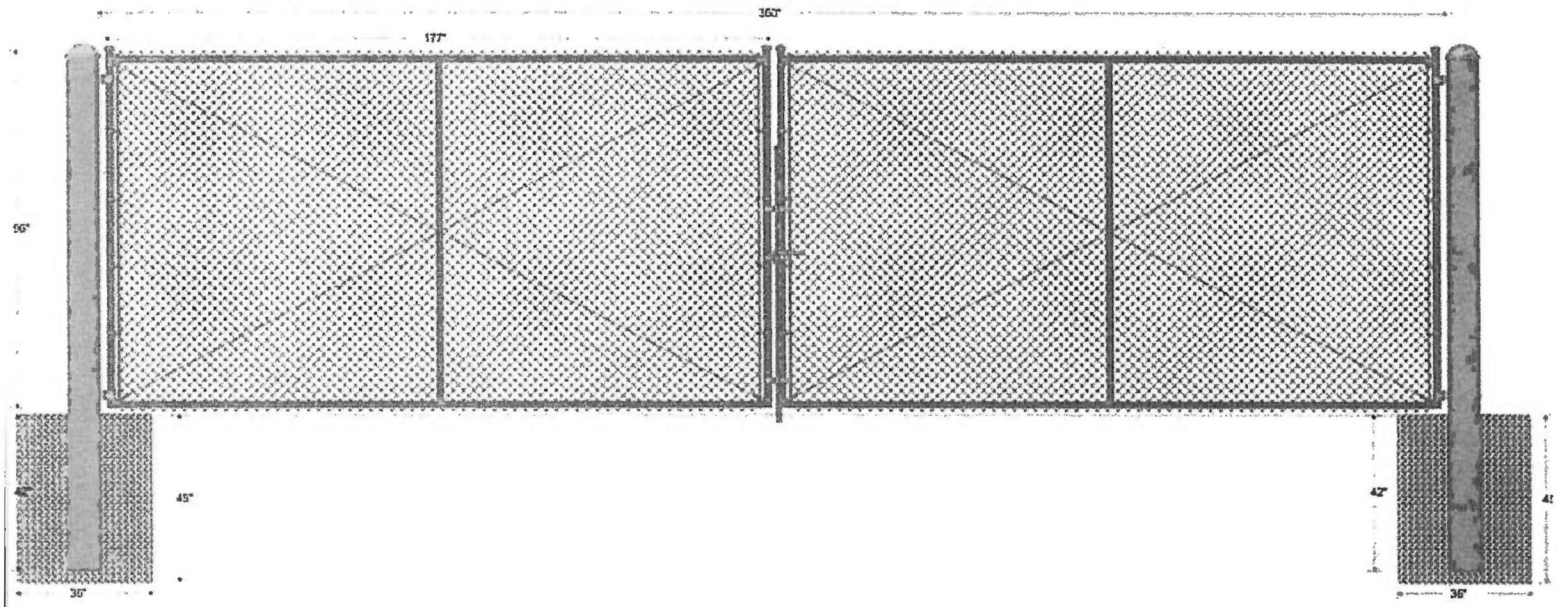

Fabric:

96" 9 GA GBW (1" Mesh) KK CHAIN-LINK FABRIC

Hinge Post:

8 5/8" X 11'6" IMPORT SCH 40 PIPE CUT POST

Hinge Post Depth: 42 in.

Gate Frame:

2" LG-40 PIPE 24'

Vertical Brace:

1 5/8" LG-40 PIPE 21'

Hinge:

8 5/8" X 2 3/8" PS INDUSTRIAL BULLDOG HINGE

Latch:

1 5/8" or 2" PS INDUSTRIAL DROP ROD ASSEMBLY

Tie Wire Spacing: 24 in.

Fence Cloud Estimate

Colusa Jail 8ft

Arrow Fence
P.O. Box 385
Calpella, CA 95418
17074851128

Colusa Jail
jail
929 Bridge St
Colusa, CA 95932

Double Gate 96" H x 360" W

Drawn By: Chris Woida
Date: 09/16/25

NO INSPE ONS OR MILL CERTS SUPPLIED
FABRICATED FROM *PREGAL* TUBE STEEL
BLACK POLY POWDER COAT FINISH
QTY: ~~1~~ 3

DRILL HOLES TO MOUNT MAMMOTH HINGES

ITEM	MATERIAL
①	2"SQ 14GA FRAME
②	1"SQ 14GA PICKETS-WELDED ON ALL FOUR SIDES
③	K-BXED-ETPDLV99 LOCKBOX
④	16GA 1/2" PERF METAL INFILL WITH U-CHANNEL TRIM
⑤	15"H X 10GA GALV PUSH PLATE (BOTH SIDES)
⑥	10"H X 10GA GALV KICK PLATE (BOTH SIDES)
⑦	1-1/2"W x 10GA GALV LATCH GUARD

GATE WIDTH CALCULATIONS		
	48"	OPENING
MINUS	1"	HINGE GAP
MINUS	1/2"	LATCH GAP
EQUALS	46-1/2"	GATE WIDTH

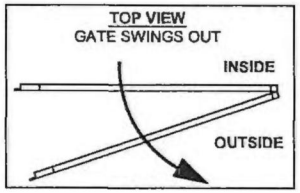

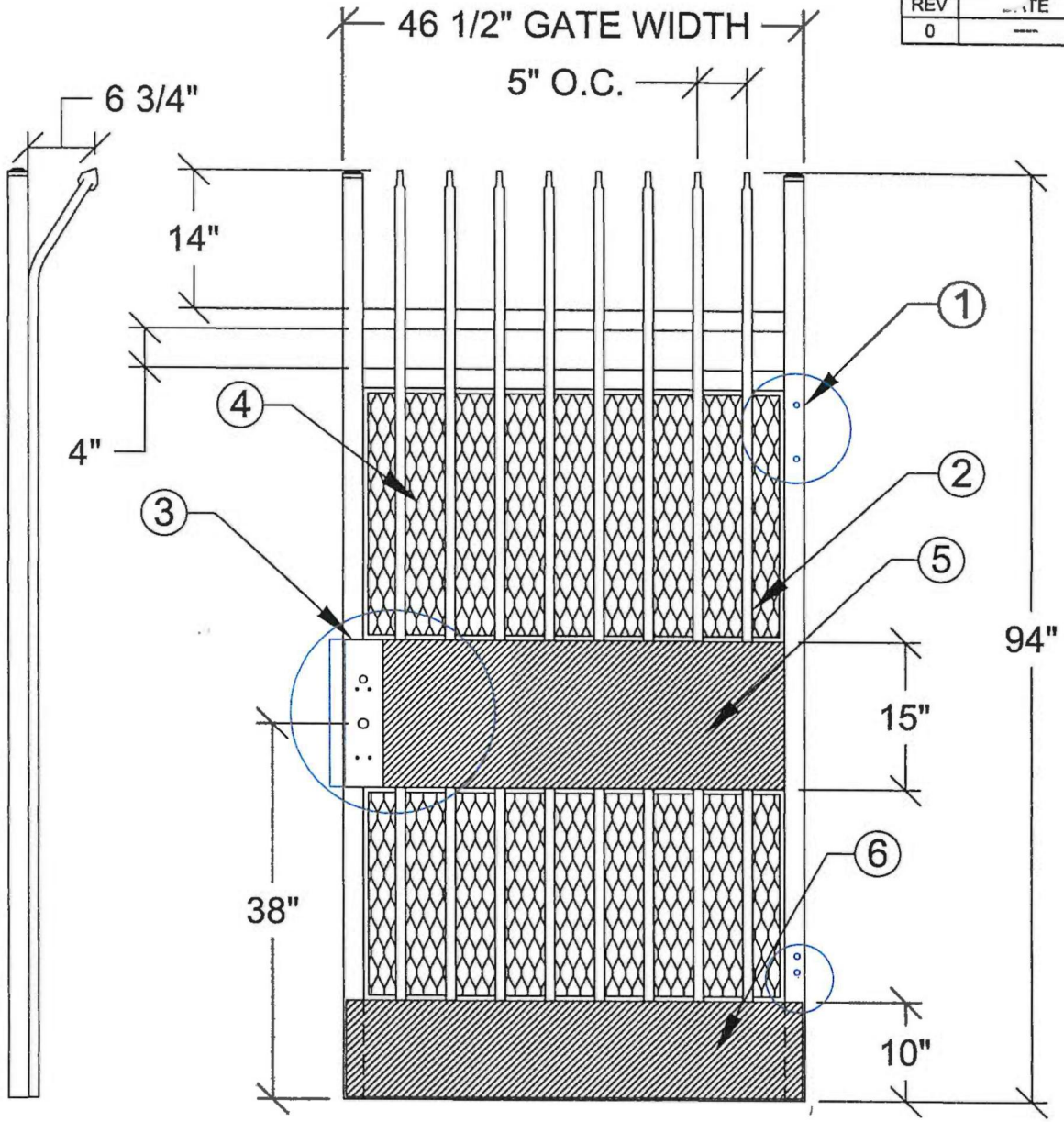

DWG CALTRANS 3-0N9904 WEST SAC PANEL & PANIC GATE

ALL DRAWINGS ARE VIEWED FROM OUTSIDE UNLESS OTHERWISE STATED

REVISIONS		
REV	DATE	BY
0	----	MMH

ACCEPTED AS IS- CHECK BOX AND SIGN ☐

PO # _____

OR

RESUBMIT WITH CHANGES- CHECK BOX & ***DO NOT SIGN*** ☐

BY SIGNING YOU HAVE DETERMINED THAT ALL INFORMATION IS ACCURATE AND READY TO BE BUILT PER CAPITOL STEEL'S SUBMITTED CAD DRAWING. THE SIGNING PARTY TAKES FULL RESPONSIBILITY FOR ACCURATE INFORMATION PROVIDED. ANY CHANGES, ALTERATIONS OR MODIFICATIONS WILL RESULT IN ADDITIONAL CHARGES.
THIS ORDER WILL NOT BE PROCESSED UNTIL SIGNED DRAWINGS ARE RECEIVED*

Approved By: _____ Date: _____ 2024

These designs are the property of Capitol Steel Products Unauthorized use strictly prohibited.
NOT TO BE REPRODUCED

CAPITOL STEEL PRODUCTS
A DIVISION OF SECURITY CONTRACTOR SERVICES
PHONE: 916-383-3368 | FAX: 916-383-3310

CUSTOMER: ARROW FENCE
JOB NAME: CALTRANS WEST SAC
SALES: JJM | DATE: 2 OCT 2024
DRAWN : MMH | SHEET 1 OF 10

REVISIONS		
REV	DATE	BY
0	----	MMH

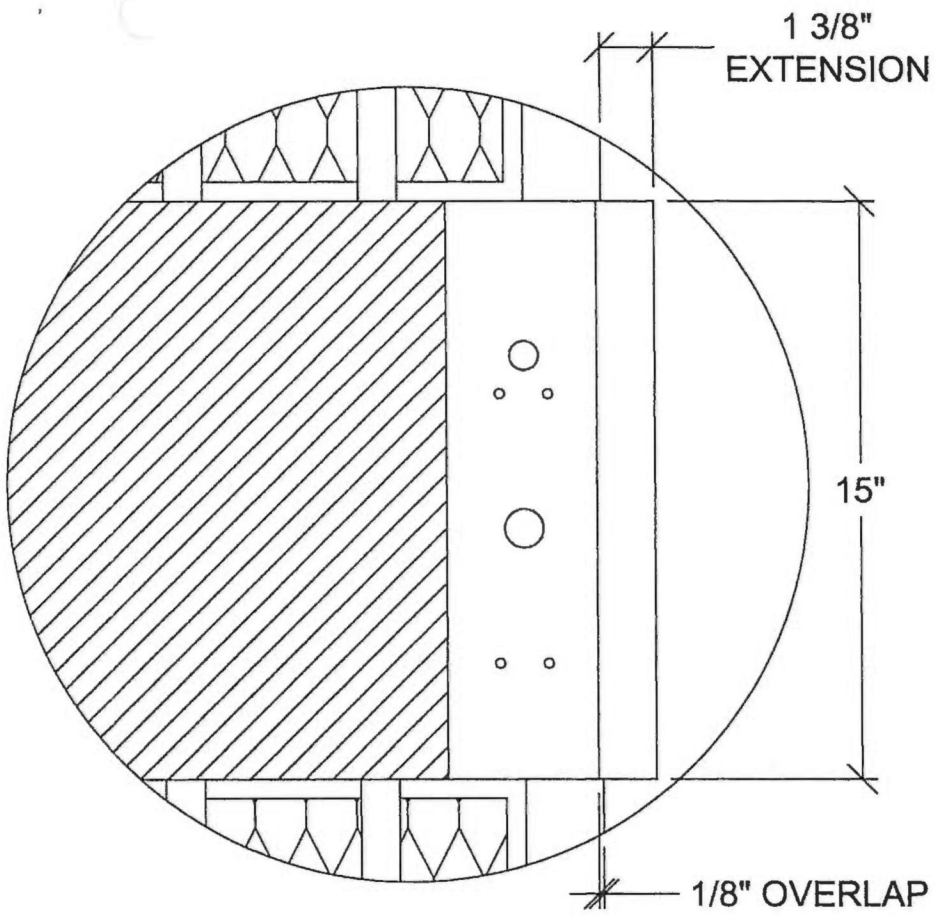

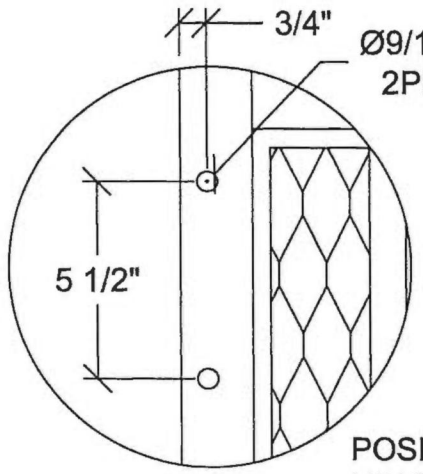

POSITION HOLES SO TOP OF HINGE ROUGHLY ALIGNS WITH BOTTOM OF RAIL

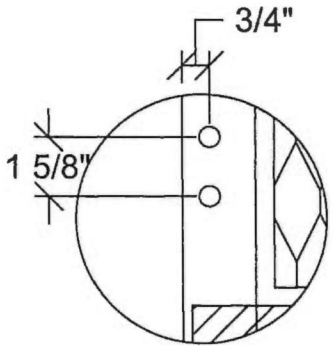

POSITION HOLES SO BOTTOM OF HINGE IS ABOVE KICK PLATE

DWG CALTRANS 3-0N9904 WEST SAC PANEL & PANIC GATE

ALL DRAWINGS ARE VIEWED FROM OUTSIDE UNLESS OTHERWISE STATED

ACCEPTED AS IS- CHECK BOX AND SIGN ☐

PO # _____

OR

RESUBMIT WITH CHANGES- CHECK BOX & ***DO NOT SIGN*** ☐

BY SIGNING YOU HAVE DETERMINED THAT ALL INFORMATION IS ACCURATE AND READY TO BE BUILT PER CAPITOL STEEL'S SUBMITTED CAD DRAWING. THE SIGNING PARTY TAKES FULL RESPONSIBILITY FOR ACCURATE INFORMATION PROVIDED. ANY CHANGES, ALTERATIONS OR MODIFICATIONS WILL RESULT IN ADDITIONAL CHARGES.
THIS ORDER WILL NOT BE PROCESSED UNTIL SIGNED DRAWINGS ARE RECEIVED

Approved By: _____ Date: _____ 2024

These designs are the property of Capitol Steel Products Unauthorized use strictly prohibited.
NOT TO BE REPRODUCED

CAPITOL STEEL PRODUCTS
A DIVISION OF SECURITY CONTRACTOR SERVICES
PHONE: 916-383-3368 | FAX: 916-383-3310

CUSTOMER: ARROW FENCE
JOB NAME: CALTRANS WEST SAC
SALES: JJM | DATE: 2 OCT 2024
DRAWN : MMH | SHEET 2 OF 10

NO INSPE ONS OR MILL CERTS SUPPLIED
GATE FABRICATED FROM *PREGAL* TUBE STEEL
POST FABRICATED FROM HSS TUBE STEEL
BLACK POLY POWDER COAT FINISH

QTY: 1

REVISIONS		
REV	ATE	BY
0	---	MMH

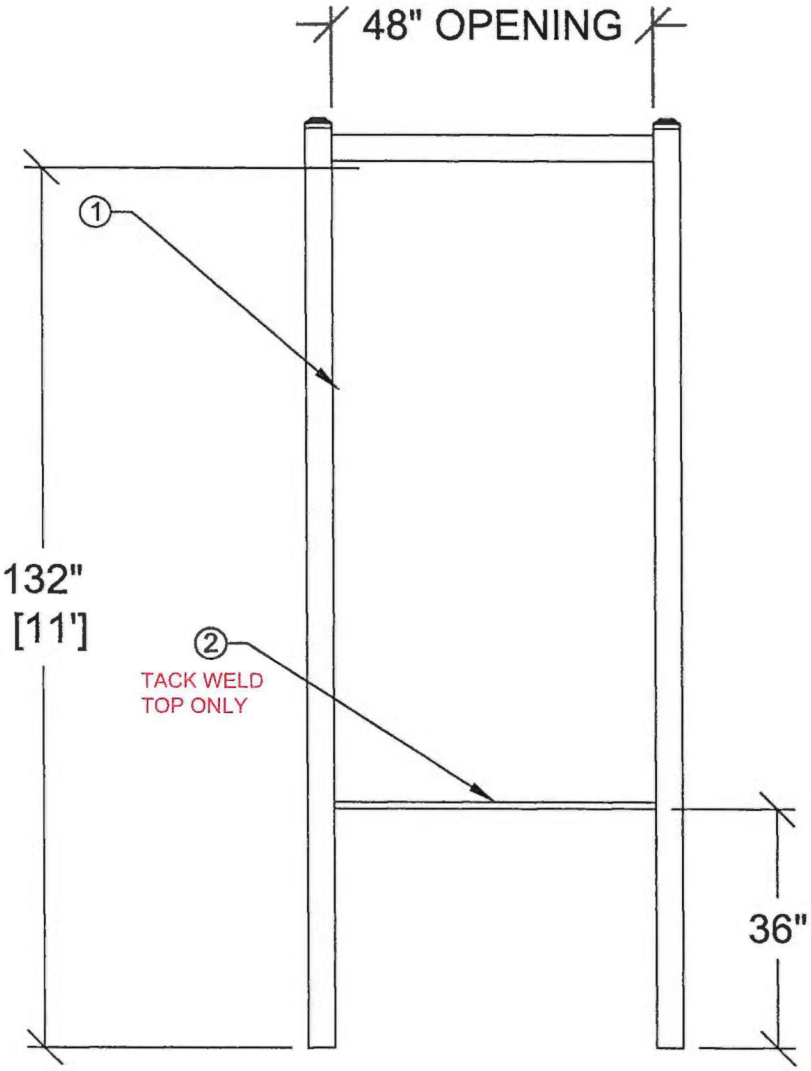

ITEM	POSTS
①	4"SQ 11GA POSTS & HEADER
②	1"SQ 11GA CROSS PIECE

ALL DRAWINGS ARE VIEWED FROM OUTSIDE UNLESS OTHERWISE STATED

DWG CALTRANS 3-0N9904 WEST SAC PANEL & PANIC GATE

ACCEPTED AS IS- CHECK BOX AND SIGN ☐

PO # _____

OR

RESUBMIT WITH CHANGES- CHECK BOX & ***DO NOT SIGN*** ☐

BY SIGNING YOU HAVE DETERMINED THAT ALL INFORMATION IS ACCURATE AND READY TO BE BUILT PER CAPITOL STEEL'S SUBMITTED CAD DRAWING. THE SIGNING PARTY TAKES FULL RESPONSIBILITY FOR ACCURATE INFORMATION PROVIDED. ANY CHANGES, ALTERATIONS OR MODIFICATIONS WILL RESULT IN ADDITIONAL CHARGES.
THIS ORDER WILL NOT BE PROCESSED UNTIL SIGNED DRAWINGS ARE RECEIVED*

Approved By: _____ Date: _____ 2024

These designs are the property of Capitol Steel Products Unauthorized use strictly prohibited.
NOT TO BE REPRODUCED

CAPITOL STEEL PRODUCTS
A DIVISION OF SECURITY CONTRACTOR SERVICES
PHONE: 916-383-3368 | FAX: 916-383-3310

CUSTOMER: ARROW FENCE
JOB NAME: CALTRANS WEST SAC
SALES: JJM | DATE: 2 OCT 2024
DRAWN : MMH | SHEET 3 OF 10

Cristy box detail & Trench Detail

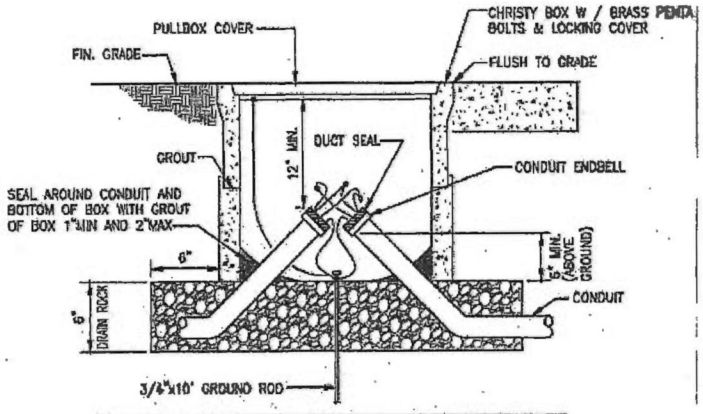

NOTES:

1. PROVIDE 12" SLACK OF WIRES FINISHED GRADE.
2. PROVIDE SPLICE WITH WATERPROOF AND OIL RESISTANT COATING.
3. PROVIDE REINFORCED PVC FITTINGS & SEALING COMPOUNDS TO INCOMING AND OUT GOING CONDUITS.
4. REFER TO TRENCHING DETAIL FOR DEPTH OF CONDUIT.
5. PROVIDE AND INSTALL (2) PENTA BOLTS FOR ALL PULLBOX COVERS. PROVIDE PENTAHEAD SOCKET TO OWNER

9 TYPICAL UNDERGROUND PULLBOX INSTALLATION
SCALE: N.T.S.

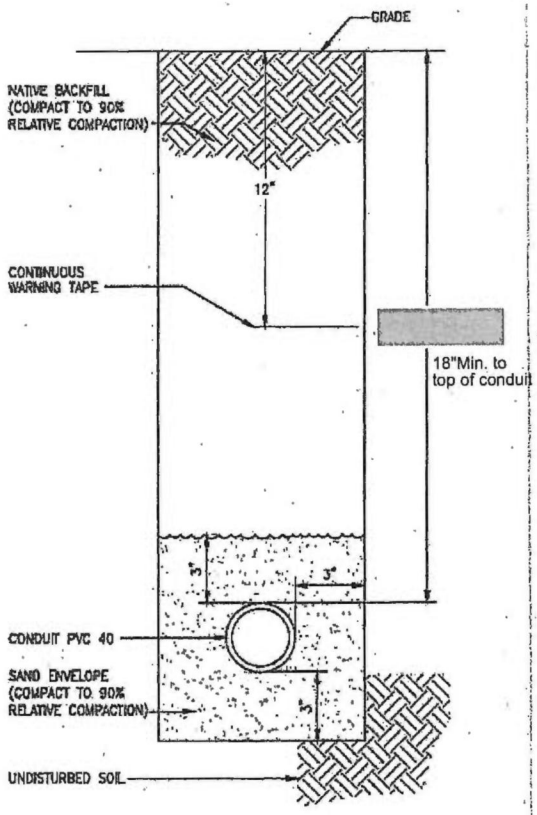

4 TRENCH DETAIL
SCALE: N.T.S.

TYMETAL
SECURITY GATES & PERIMETER SOLUTIONS

MADE IN THE USA

TIGER Cantilever Slide Gate, Operator & Lock System

Spans single clear opening widths up to 40 feet and double/bi-parting openings up to 80 feet.

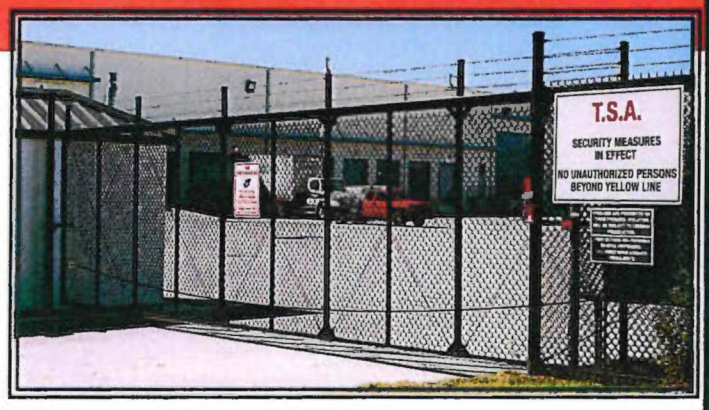

Fully integrated operator and lock included.

FEATURES:

***TIGER* Design:**
Dual-track Structural Cantilever Slide Gate that is integrated with a correctional grade variable speed operator and electromechanical lock. The most secure cantilever slide gate system available.

Construction:
Welded aluminum using custom heavy wall extrusions. Hardware to adapt and install gate operator included.

Durable:
Fabricated by AWS Certified Welders.

TYM-VSA Gate Operator and 1050D Lock:
The variable speed operator performs seamlessly with the 1050D lock. Speeds up to 2.2 feet per second. Tamper proof motor box is 10-gauge steel with detention grade lock. In the event of a power outage a crank handle located in the motor box can open and close the gate.

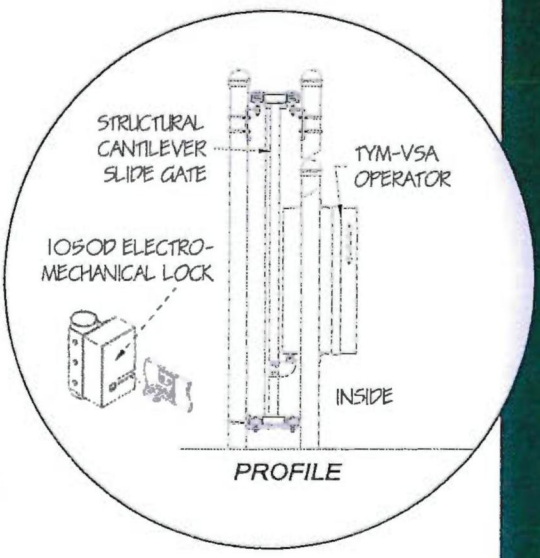

Diagonal Cables:
Adjustable ¼" galvanized steel cables provide zero to minimal deflection.

Tested:
The gate and operator system has been cycle tested in excess of 200,000 cycles. Performs reliably over time.

Visit Our Website for a Full Specification and Drawings

SECURING INFRASTRUCTURE AROUND THE WORLD SINCE 1985

1-800-328-GATE (4283) **TYMETAL.COM**

TIGER Cantilever Slide Gate, Operator & Lock System

Maximum Clear Opening Width	**Single Gate:** 40 feet; Double/Bi-parting gates: 80 feet
Maximum Height	**Standard Height:** Up to 8 feet (Note: Contact manufacturer regarding sizes greater than those stated.)
Gate Construction	▸ Dual track design, supported by four posts. ▸ Gate track systems will be keyed to interlock into the primary upper horizontal gate frame member and then welded to form a composite structure. ▸ The gate frame counterbalance length will be a minimum of 50% of the clear opening width. ▸ Intermediate vertical members of the gate frame to be spaced less than 50% of the gate frame height. ▸ The gate frame includes two adjustable ¼" galvanized steel cables per bay for stability and to allow complete gate frame adjustment.
Gate Operator	▸ TYM-VSA 1 HP variable speed operator and 1050D electromechanical lock is integrated into the gate system design. ▸ APeX Controller with integrated radio receiver. ▸ **Capacity:** 4,500 pounds. ▸ **Speed:** Variable speeds up to 2.2 feet per second with soft start/stop feature. ▸ In the event of power outage a crank handle located in motor box is used to open and close the gate manually. ▸ **Power Options:** [208/230 VAC, Single Phase] or [208/230 VAC, Three Phase] or [460 VAC, Three Phase].
Safety	Meets ASTM F 1184 Type II, Class 2; ASTM F 2200 and UL 325 Classes III and IV compliant.
Infill Options	▸ Aluminized or galvanized steel 2" x 2" x 9-gauge fabric. ▸ 1" x 1" aluminum pickets – each welded in place. ▸ 1" x 1" extended smashed point pickets – punched through top member and welded in place. ▸ High security Anti-Climb welded wire mesh ½" x 3" x 8 gauge galvanized steel. Other welded wire mesh designs available. ▸ Custom horizontal or vertical louvers to block visibility. ▸ Perforated or expanded metal sheets. ▸ Ballistic rated panels. ▸ Custom infills – contact a TYMETAL Specification Team member.
Finish	▸ Mill finish aluminum or color/powder coating with polyester powder to color of choice (reference RAL color chart). ▸ If a galvanized steel component (such as infill and posts) color/powder coating is available.
Warranty	▸ The **TIGER Cantilever Slide Gate, Operator and Lock System** is warranted against manufacturing defects by the manufacturer for a period of three years from date of sale. The truck assemblies are warranted against manufacturing defects for a period of five years from date of sale.

Speak with Specifications & Design Support Directly

Contact TYMETAL at 1-800-328-GATE (4283) or gates@tymetal.com

Standard and Custom Solutions, Manufactured in New York and Texas.

678 Wilbur Avenue, Greenwich, NY 12834

4501 Dixie Farm Road, Pearland, TX 77581

TYMETAL
SECURITY GATES & PERIMETER SOLUTIONS

Safety Information for Slide Gate Operators

In addition to the inherent reversing sensor system, external entrapment protection MUST be installed or the operator will NOT function. Install these devices where the risk of entrapment or a safety hazard exists while the gate is moving. Specific installations will vary.

Non-Contact Sensors (Photo Eyes)

1 Minimizes the potential of the gate closing on vehicular or other traffic that loops cannot sense. It can be installed on the secure or non-secure side of the gate

2 Helps minimize the potential of entrapment during the back travel of the gate

Contact Sensor (Reversing Edges)

A Installed on the fence to help minimize the potential of entrapment between the gate and fence. A filler post or barrier may need to be installed between fence and gate

B Helps minimize the potential of entrapment during the back travel of the gate

C Minimizes the potential of the gate closing on vehicular or other traffic that loops cannot sense

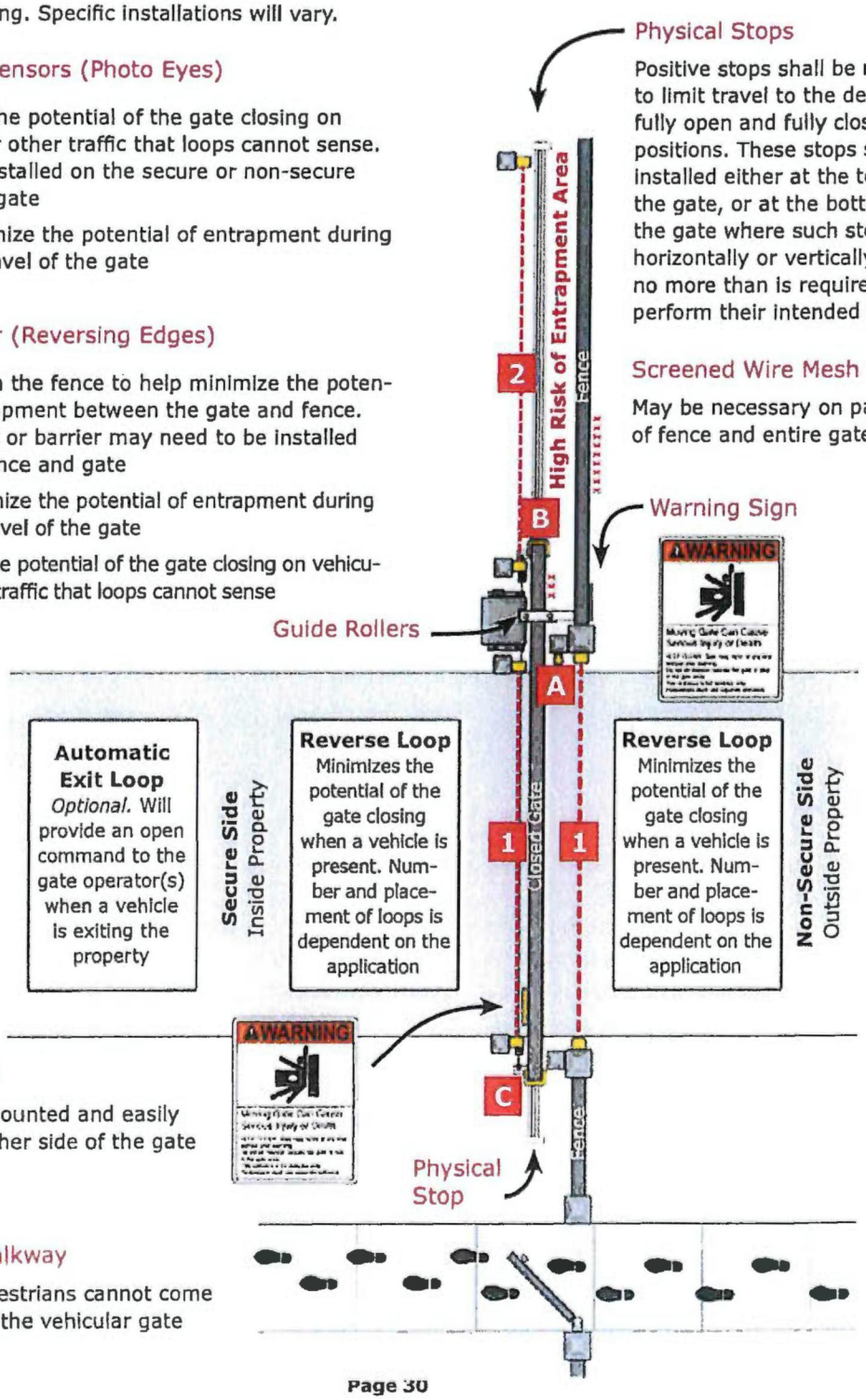

Slide Gate Requirements

An automatic gate operator is intended for installation only on gates used for vehicles. Pedestrians must be supplied with a separate access opening. The pedestrian access opening shall be designed to promote pedestrian usage. Locate the gate such that persons will not come in contact with the vehicular gate during the entire path of travel of the vehicular gate.

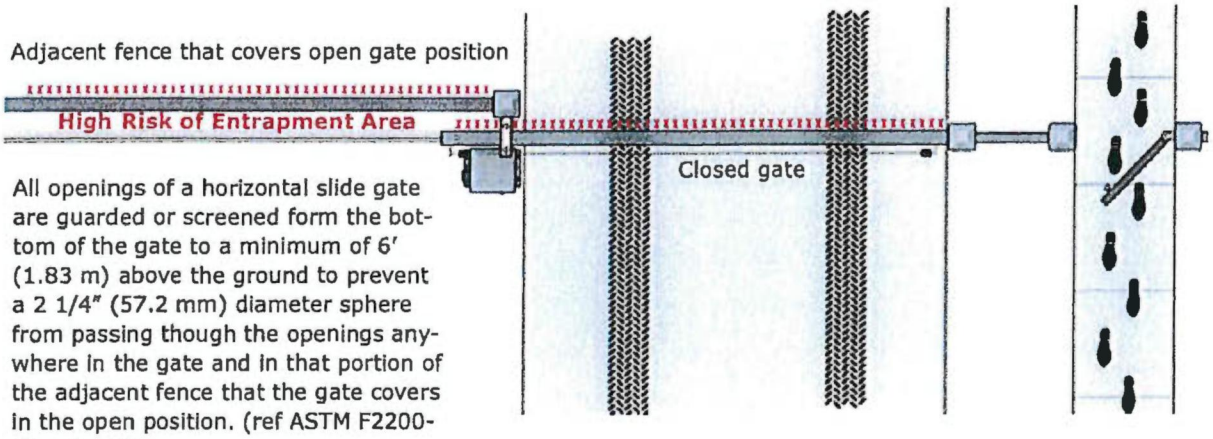

All openings of a horizontal slide gate are guarded or screened form the bottom of the gate to a minimum of 6′ (1.83 m) above the ground to prevent a 2 1/4″ (57.2 mm) diameter sphere from passing though the openings anywhere in the gate and in that portion of the adjacent fence that the gate covers in the open position. (ref ASTM F2200-11a, 6.1.2)

Non-Compliant Openings

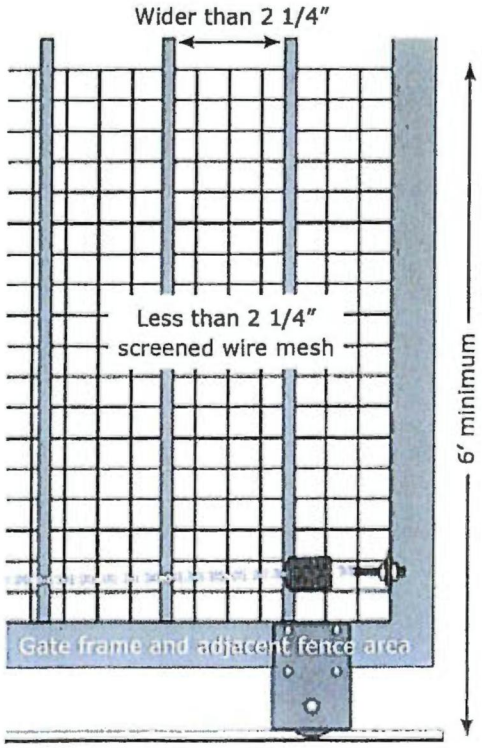

Compliant Openings

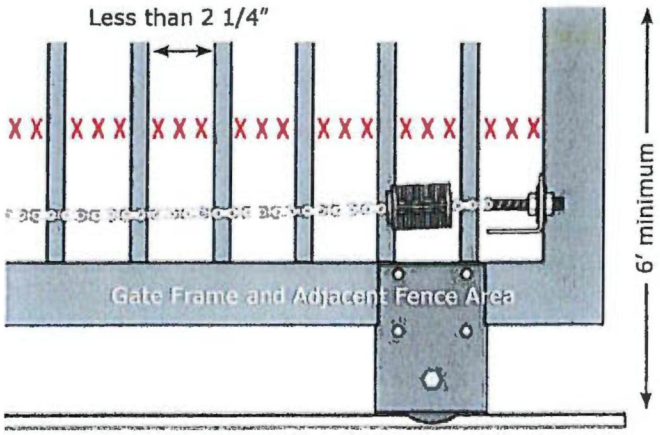

Note: Install screened wire mesh to a non-compliant gate AND non-compliant adjacent fence that covers open gate position (see above).

Slide Gate Requirements *(continued)*

Fall Over Bracket

Gates shall be designed, constructed and installed to not fall over more than 45 degrees from the vertical plane, when a gate is detached from the supporting hardware.

Gate Frame & Support Post Gap

A gap, measured in the horizontal plane parallel to the roadway, between a fixed stationary object nearest the roadway (such as a gate support post) and the gate frame when the gate is in either the fully open position or the fully closed position, shall not exceed 2 1/4" (57.2 mm). (ref ASTM F2200 6.1.4)

Note: A filler post or barrier may need to be installed in the gap area to reduce the distance to 2 1/4" or less. A contact sensor should be installed in this area for safety.

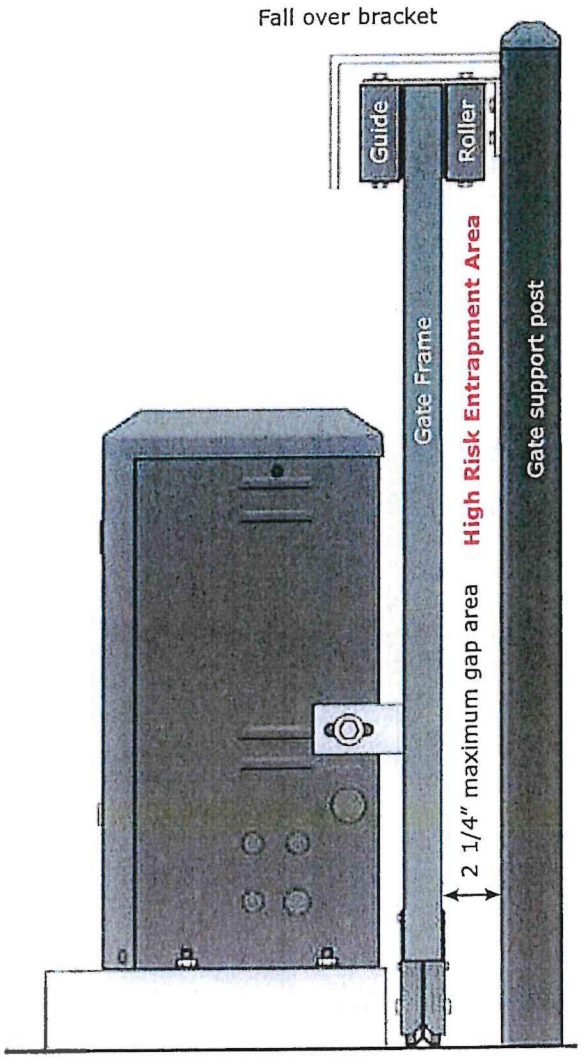

Slide Gate External Entrapment Protection Devices

Typical Photo Sensor Mounting Height and Distance Away from Gate

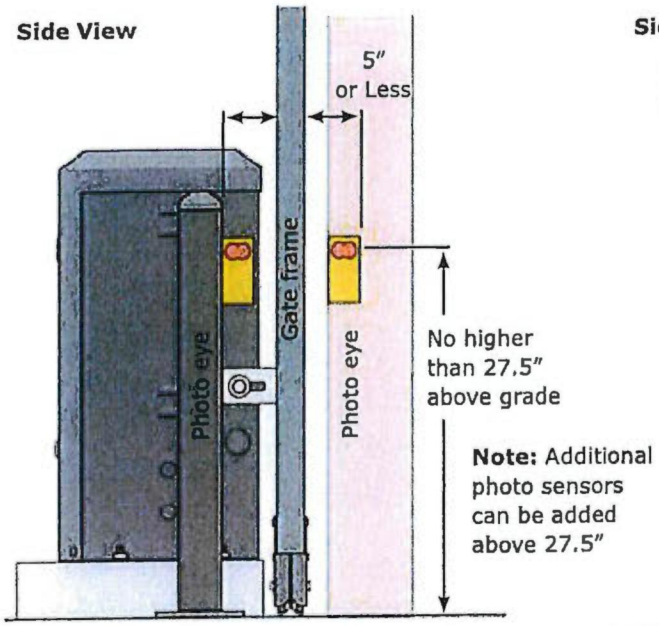

Photo sensors may be installed on either side of gate frame, as close as practical to the gate, but no further away than 5".

If the Distance Between the Gate and Wall is Greater than 2 1/4"

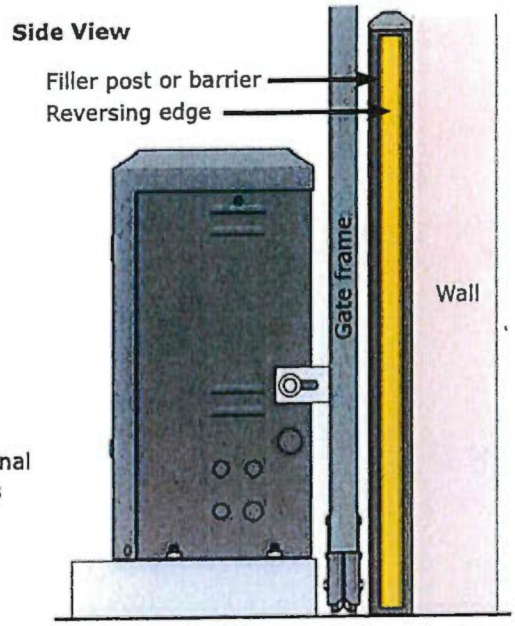

A filler post or barrier may need to be installed between the gate and wall area to reduce the distance to 2 1/4" or less. A reversing edge should be installed on the post or barrier for safety.

Wireless Reverse Edge Sample Setup

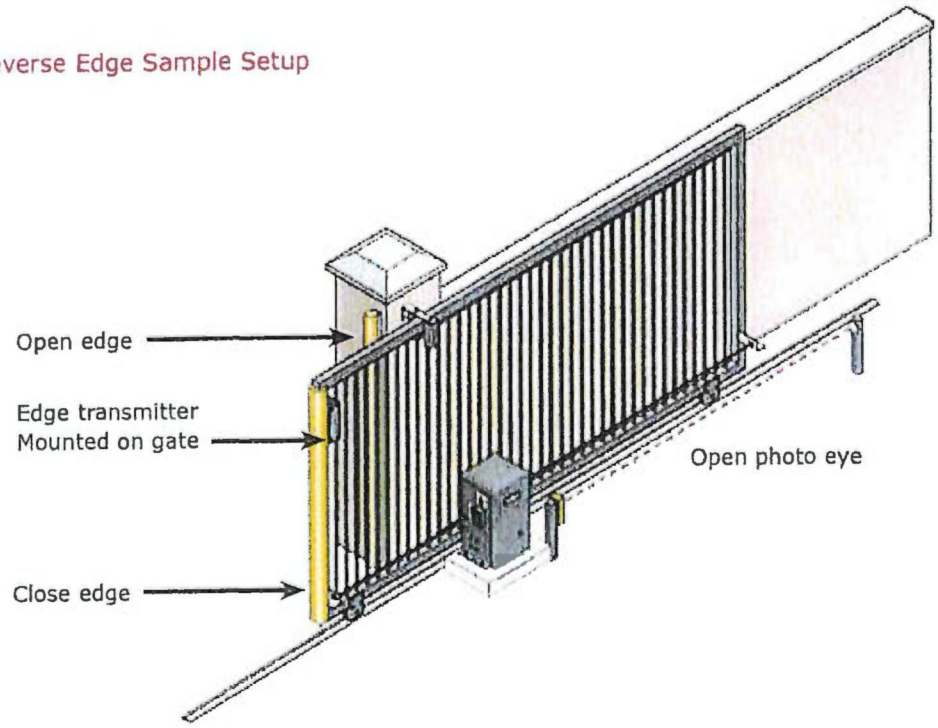

Safety Information for Swing Gate Operators

C **E** or **F** required for operator to function

C Non-Contact Sensors (Photo Sensors)

Minimizes the potential of the gate closing on vehicular or other traffic that loops cannot sense.

D Warning Signs

Permanently mounted and easily visible from either side of the gate.

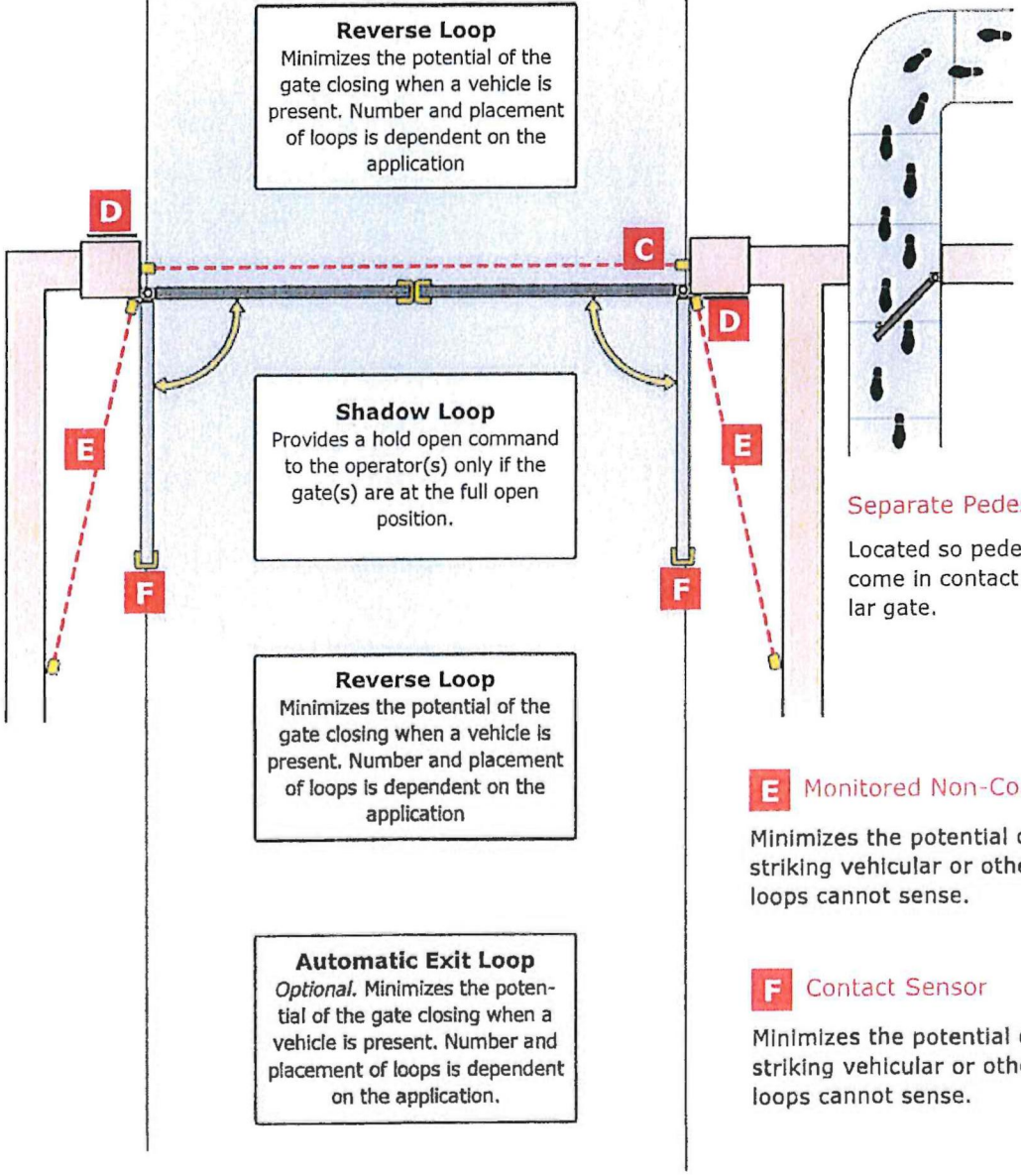

Separate Pedestrian Walkway

Located so pedestrians cannot come in contact with the vehicular gate.

E Monitored Non-Contact Sensor

Minimizes the potential of the gate striking vehicular or other traffic that loops cannot sense.

F Contact Sensor

Minimizes the potential of the gate striking vehicular or other traffic that loops cannot sense.

Swing Gate Requirements

An automatic gate operator is intended for installation only on gates used for vehicles. Pedestrians must be supplied with a separate access opening. The pedestrian access opening shall be designed to promote pedestrian usage. Locate the gate such that persons will not come in contact with the vehicular gate during the entire path of travel of the vehicular gate.

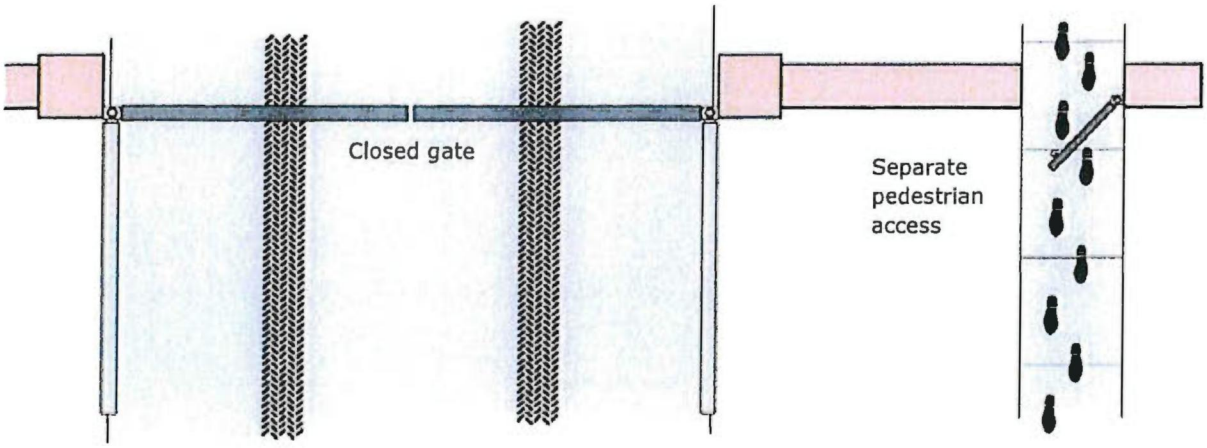

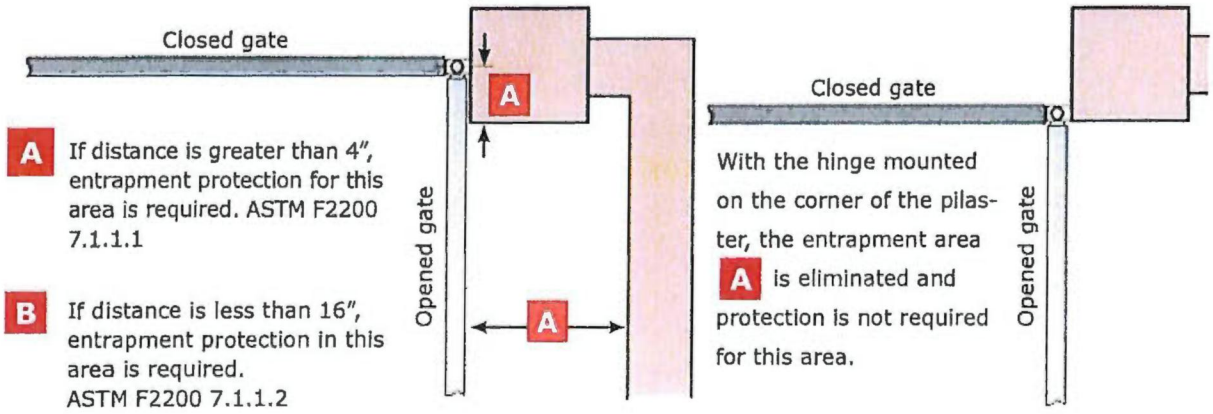

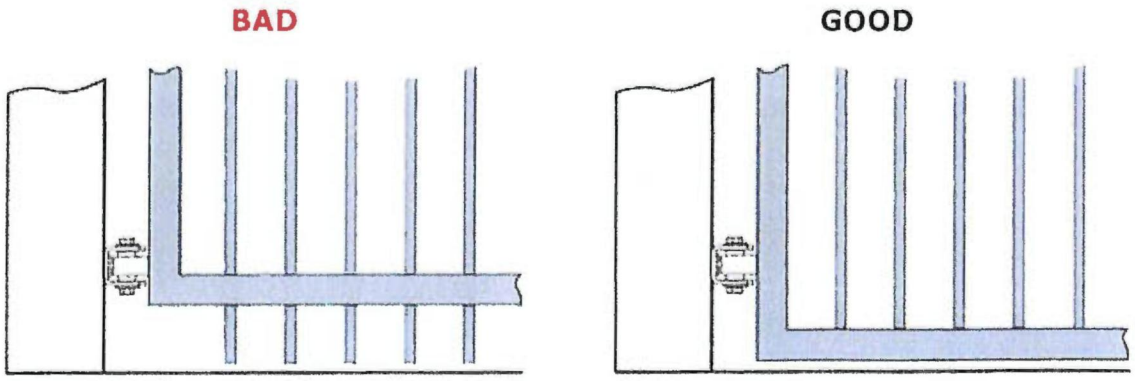

Gates shall have smooth bottom edges, with vertical bottom edged protrusions not exceeding 1/2". ASTM F2200 4.3

Swing Gate External Entrapment Protection Devices

In addition to the inherent reversing sensor system, external entrapment protection MUST be installed or the operator will NOT function. Install these devices where the risk of entrapment or a safety hazard exists while the gate is moving. Specific installations will vary.

Close Photo Eye
Side End View

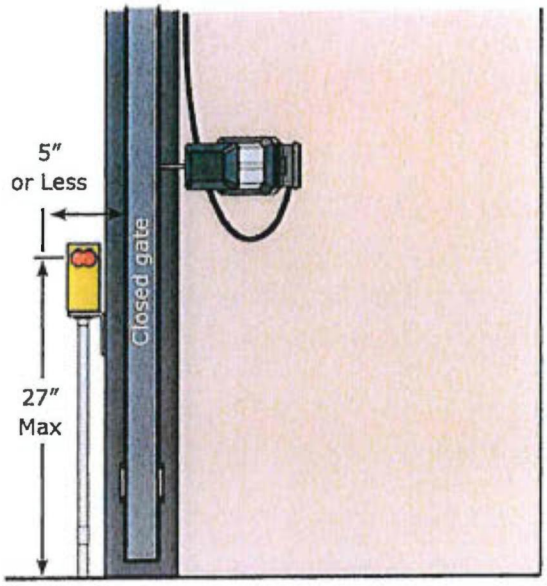

Open Photo Eye
Secure Side View

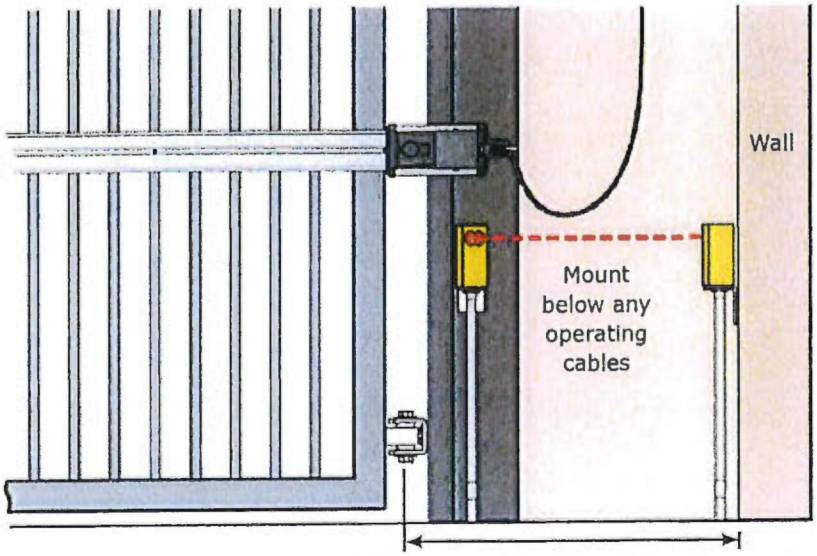

If this space is less than 16", entrapment protection is required in this area.

Closing Gate
Top View

If the closing gate could cause an entrapment, then installation of a monitored entrapment protection device is required.

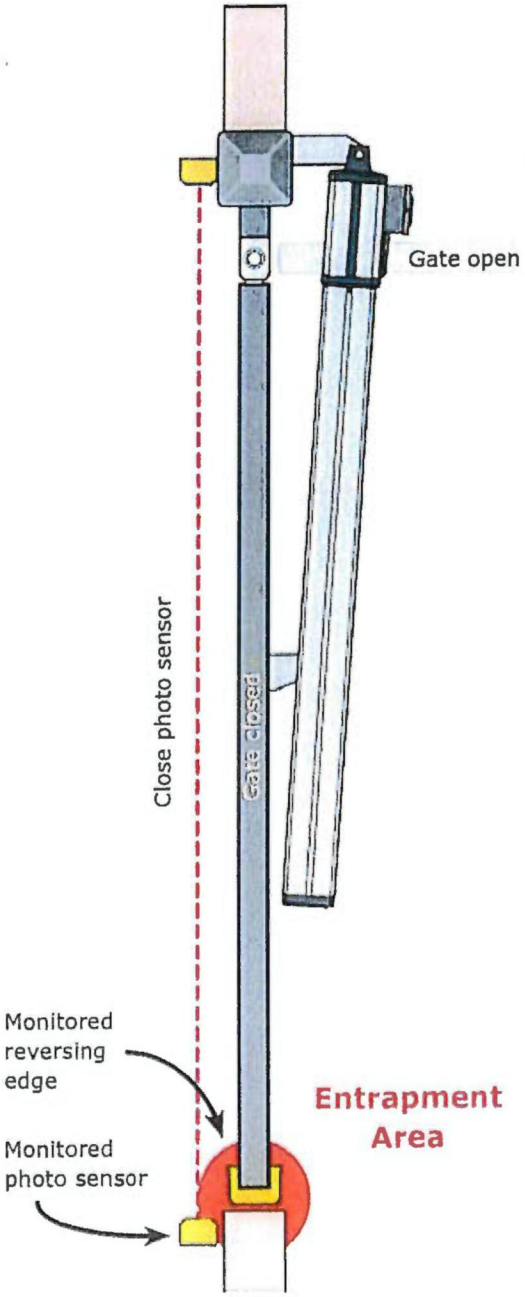

Opening Gate
Top View

If the opeing gate could cause an entrapment, then installation of a monitored entrapment protection device is required.

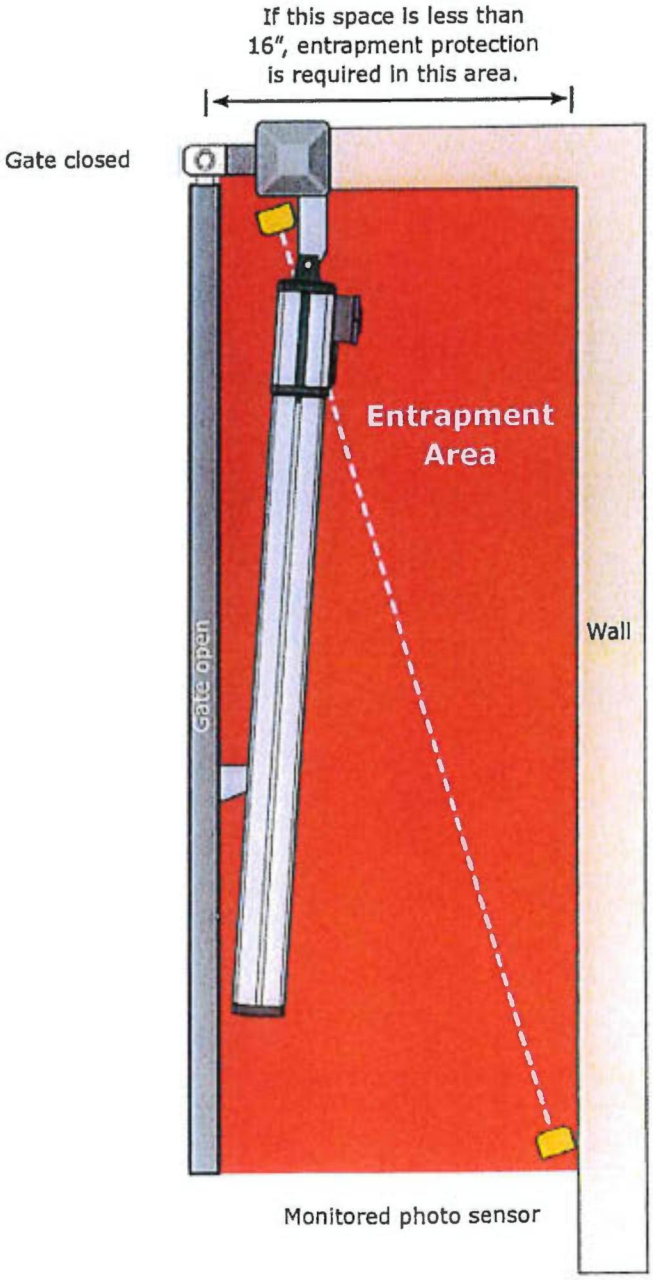

Swing Gate External Entrapment Protection Devices (continued)

Close Photo Sensor
Side End View

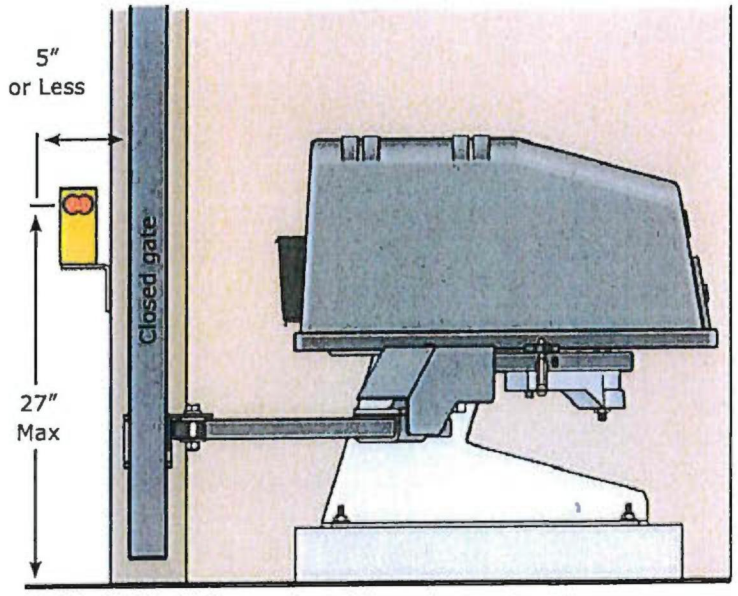

OPEN Photo Sensor
Secure Side View

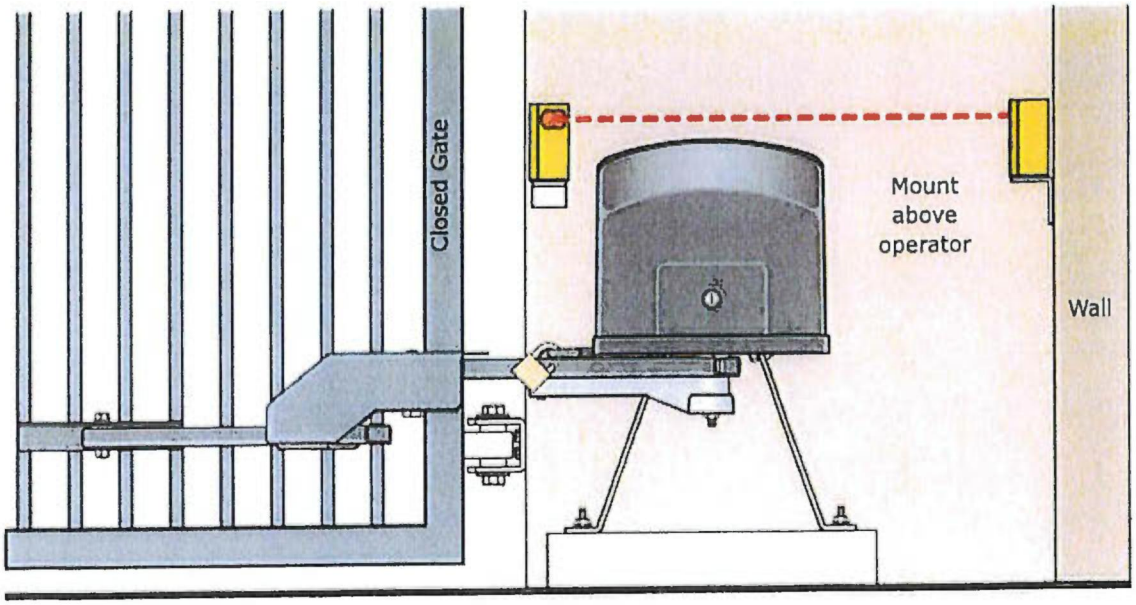

OPEN Photo Sensor
Top View

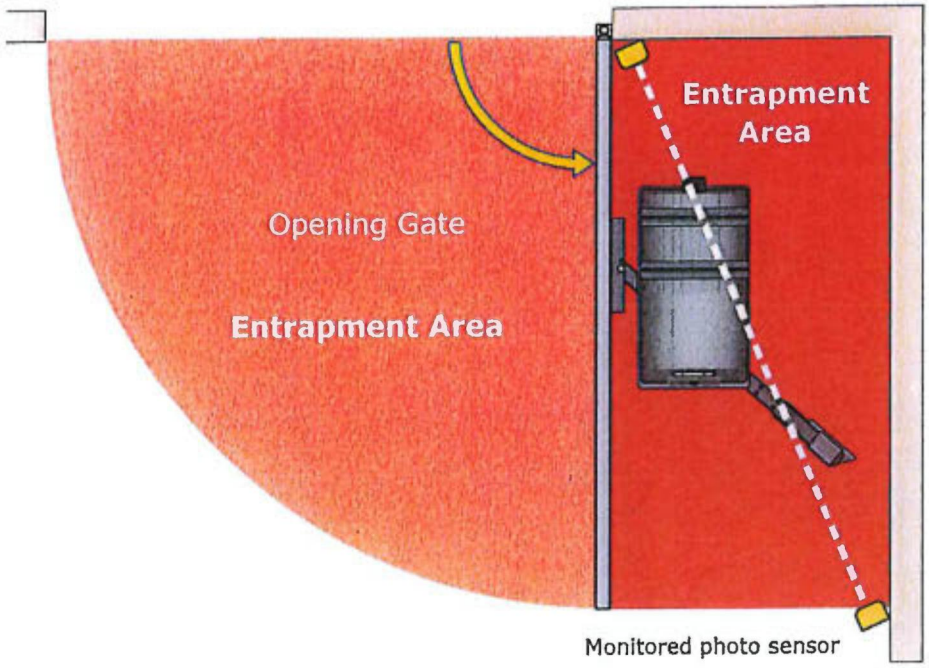

CLOSE Photo Sensor
Top View

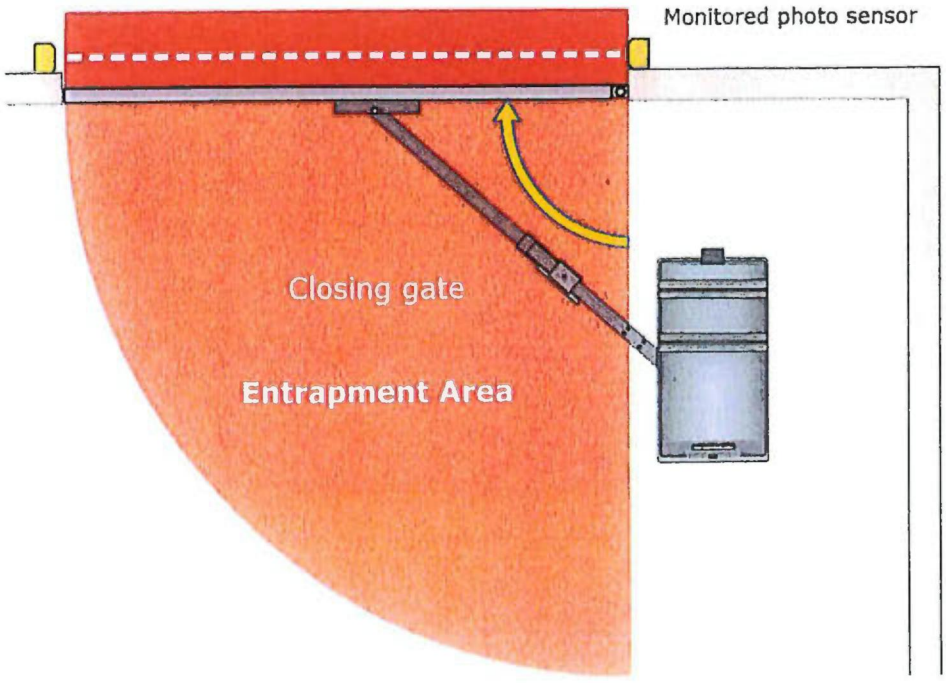

Swing Gate External Entrapment Protection Devices (continued)

Typical Monitored Reversing Edge Mounted on End of Gate

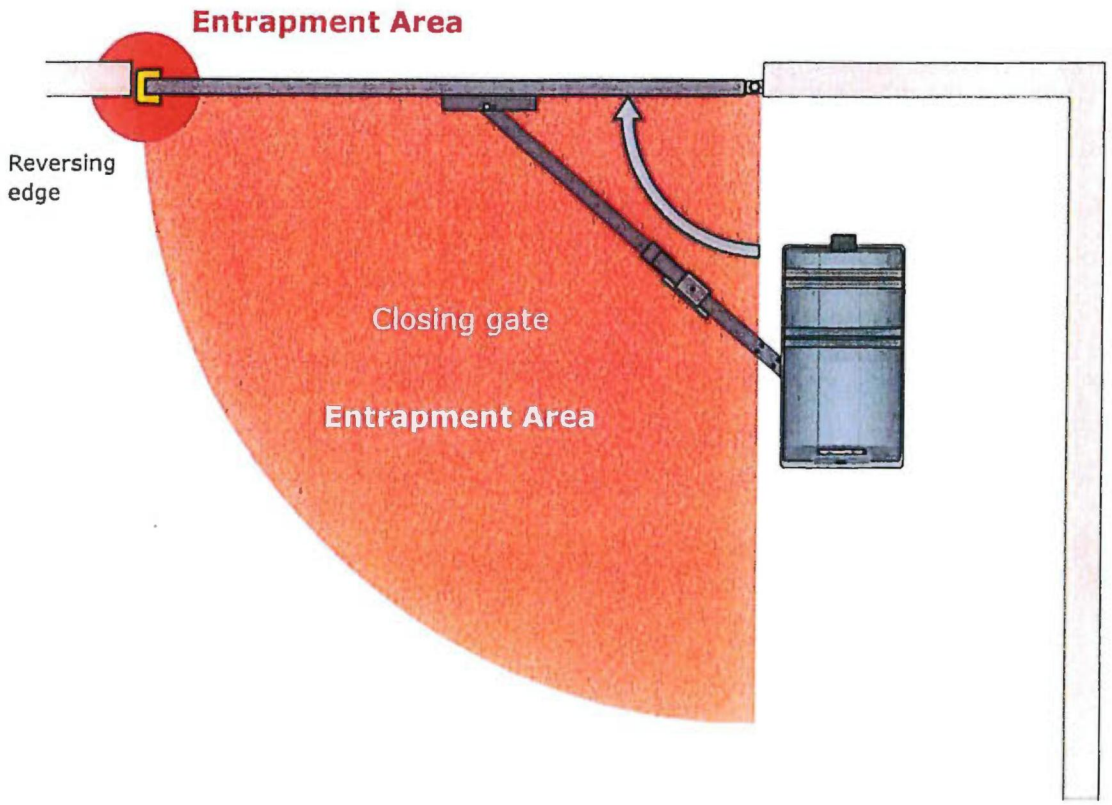

Typical Reversing Edge Mounted on Bottom of Gate

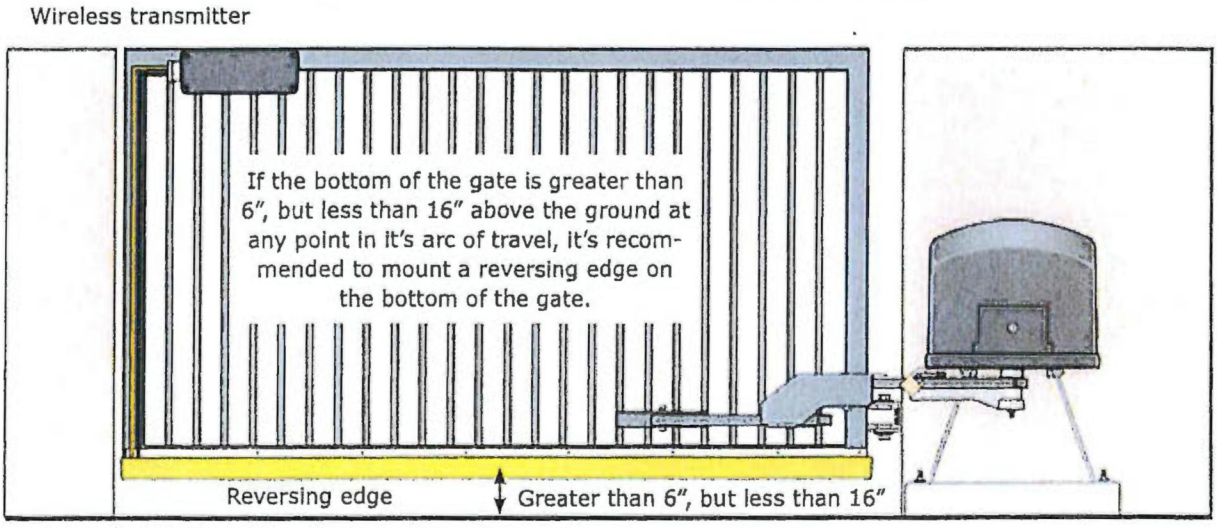

Safety Information for Barrier Gate Operators

Vehicular barrier gate operators can produce high levels of force. It is important that you are aware and eliminate possible hazards; Pinch Points, Entrapment Areas, Overhead Power Wires, Absence of Controlled Pedestrian Access, and Traffic Management.

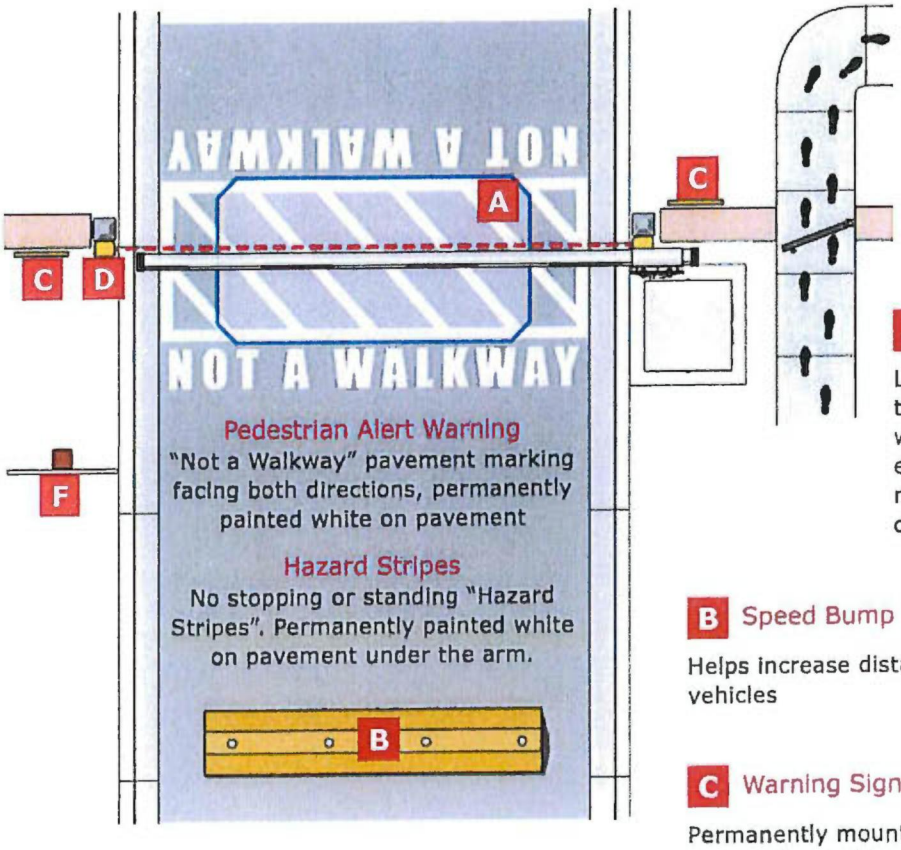

Separate Pedestrian Walkway
Located so pedestrians cannot come in contact with the barrier arm.

A In-Ground Loop(s)
Loops minimize the potential of the arm closing when a vehicle is present. Number and placement of loop(s) is dependent on the application.

B Speed Bump
Helps increase distances and time between vehicles

C Warning Signs
Permanently mounted on operator and arm and easily visable.

D Non-Contact Sensor
Minimizes the potential of the arm lowering on vehicular or other traffic that loops cannot sense. Located directly under arm.

E Contact Sensor
Minimizes the potential of the arm lowering on vehicular or other traffic that loops cannot sense.

F Speed Limit Sign
Helps control traffic

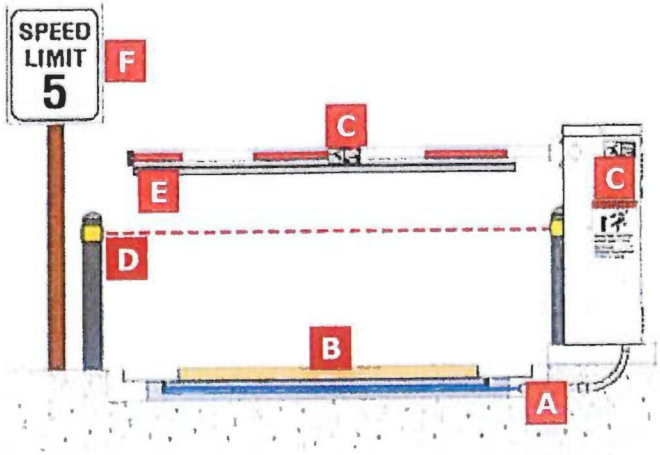

Barrier Gate Requirements

- Make sure all warning signs are on operator and arm.
- Do not install the operator in such a way that the arm moves within 16" of a rigid object or 10' from high voltage power wires with arm in the raised position.
- Speed limit through barrier area is 5 mph. Install speed bumps, warning signs and hazard stripes where visible in the area of the barrier gate. Failure to do so may result in injury, damage to operator and vehicle.
- Users should be familiar with proper use of operator. These include; hardware operation, reversing functions and testing, reversing loops, inherent reversing system, electric edges, photoelectric cells, related external devices and possible hazards.
- Keep adults, children and objects away from operator and hazard zones.
- Automotive traffic only - No bicycles or motorcycles. Pedestrians must be provided with separate access.
- All electrical connections should be made in accordance with local electrical codes.
- Security features should be installed to avoid unauthorized use.
- Controls intended for user activation must be located at least 6' away from any moving part of the barrier gate and where the user is prevented from reaching over, under or around the barrier gate to operate the controls.

Note: Emergency access controls only accessible by authorized (e.g. fire, police, EMS) may be placed at any location in the line-of-sight of the barrier gate.

- When manually operating the gate operator arm, the user must make sure that the gate area is clear before operating the control. Any activity in the entrance and exit lanes should be monitored to ensure a safe operation when opening or closing the barrier gate. The motion of the barrier boom must be directly observable by the person operating the barrier. While the barrier boom is in motion, no pedestrian and no vehicle shall be in the immediate vicinity of the barrier.
- When removing the operator lift the arm to the full open position and shut off power at the service panel.
- Operators and components should be properly installed and maintained following the recommended service schedule, test the operator monthly. Keep all debris away from operator housing vents and off of arm.

Why Should Installers Follow the UL Standard?

Safety Must be Your Most Important Priority

It is well known that "a moving gate can cause serious injury and death." Unfortunately, every year gates do inflict serious injury and sometimes death. Ensuring that your installations are configured to protect all areas of potential entrapment is your first responsibility.

Non-Compliance Creates a Serious Business Liability

Not meeting the UL 325 and ASTM F2200 safety standards has the potential to seriously damage, if not destroy your company in the advent one of your installations suffers an accidental injury or death and you end up in court defending your installation practices.

Protect Against Personal Injury Lawsuits

UL 325 and ASTM F2200 are not laws, but in a court of law, your lack of knowledge or compliance to this and other minimum industry safety standards is the kiss of death. That's not an opinion, it's the experience of many unfortunate business owners cross examined by a plaintiff's attorney. The U.S. judicial system doesn't suffer ignorance, short-cuts, or misapplying safety standards. Not following widely published industry-produced safety standards is indefensible in a court of law.

It's Not a Law, but Code Enforcement is Increasing

These defenses won't help you:

- "UL 325 and ASTM F2200 are not laws"
- "I'll never be caught"
- "No one inspects gates where I do business"
- "The standard isn't clear – I can't be held responsible for lack of clarity"
- "It's the end user's responsibility, not mine. They forced me to reduce costs so much that I couldn't afford to protect all potential entrapment areas"
- "If I try to do all that extra stuff, I'll lose bids, lose jobs . . . I could go out of business while my competitor grows his."

Plaintiff's lawyers love these poor defenses. In fact, UL 325 and ASTM F2200 are just starting points. It's up to installers to audit their site for all safety concerns beyond those presented by UL 325 and ASTM F2200 and to properly address all of those concerns.

Along with the dealers and installers, it is the owner's and user's responsibility to be aware of potential hazards associated with an automatic gate system and take appropriate steps to reduce the risk of injury. Be sure all parties read the Important Safety Information found in your gate operator's manual as it provides more details and safety considerations that can be supplied here.

How this Will Affect Dealers and Installers

- The gate operator manufacturer will indicate the class of each operator in multiple locations.
- Sales personnel must match the site application with the correct Usage Classification of operator.
- Primary and secondary entrapment protection devices must be installed and matched to the operator.
- Waivers of safety or not installing entrapment protection devices is not an option.
- Responsibility for UL safety standards does pass to the dealer and installer.
- Warning signs must be permanently attached within clear view of the moving gate. The installing dealer should take a dated photo of the gate system with the signs in place to prove that they were furnished.
- The dealer and/or installer should develop an installation checklist and customer sign-off form.
- Service and preventive maintenance contracts will be in demand by the customers, and are good for the dealers when they ensure safe and proper operation of the system.
- The issue of safety could give a dealer a good excuse to call on the owners of older systems and inform them that their systems should be safety upgraded to meet the new standards.

Maintenance Tips

- Check that the gate is level. Manually open and close the gate to make sure it travels smoothly
- Check the gate hardware on a regular basis. Tighten any loose fasteners and replace any worn or damaged parts. A smooth running gate prolongs the life of your gate operator
- Before the qualified installer leaves the site, make sure instructions are given to the end user on all operational functions of the gate operator. Teach them how to reset the gate operator, turn off/on power, and manually operate the gate

Clutch Adjustment

Some operators come equipped with a mechanical slip clutch (UL 325 Type C) to further reduce the possibility of injury should an entrapment occur. Do not over tighten the clutch to compensate for a gate that is damaged, poorly constructed or too heavy. Over tightening the clutch would create a hazard which could result in serious injury or death to persons who may become entrapped.

Test the Operator Reversing Sensitivity

Place an immobile object along the gate path, allowing the gate to strike it while in the open and close cycles. The gate must reverse direction after striking the object. If it does not, increase the reverse sensitivity and repeat this test until the correct sensitivity has been set. The operator will assume a soft shutdown after striking and reversing the gate which will require a key switch command to cycle the operator again.

Edge Sensor Inventory Warning

Edge sensors that have been used previously cannot be monitored to comply with the needs of post-2016, UL 325 gate operators. Some operators will require a Normally Closed (NC) adapter device which allows the gate operator to monitor edge sensor presence. While, other gate operators will require new edge sensors featuring a 10k Ohm resistor in order to monitor it's presence.

Be Aware of Different Manufacturers' Interpretations of UL 325 Compliance

Because the scope of a standard such as UL 325 does not tell manufacturers' exactly how they must implement changes to meet its requirements, and because two people frequently have different interpretations of the same sentence, differences in engineering solutions between manufacturers' products are inevitable. Unfortunately, these differences, especially in the methods of monitoring external entrapment protection sensors, increase complexity in our industry and will likely lead to installer confusion. Distributors, dealers, specifiers, and installers need to become very informed of the new requirements and how each manufacturer has implemented the changes into their products, so that they can educate their staff and end users.

Where Else Can I Go to Educate Myself About Changes to 2016 UL 325 Standards?

- Gate operator installation manuals & gate operator quick start guides distributed with every operator.
- Manufacture's online or in-person training.
- Distributors online and in-person training. Check with your distributor.

DASMA - Door & Access Systems Manufactures Association

North America's trade association for manufacturers of garage doors, rolling doors, high performance doors, garage door operators, vehicular gate operators, and access control products.

Door & Access Systems Manufactures Association, 1300 Sumner Ave, Cleveland, OH 44115
(216) 241-7333
dasma@dasma.com
www.dasma.com

IDEA - Institute of Door Dealer Education and Accreditation

The IDEA is a non-profit educational organization established to meet the informational needs of consumers and the business and accreditation needs of door, gate and operator dealers. As the authoritative voice of the industry, IDEA promotes a better industry and better products that provide enhanced protection against high winds, fire, entrapment, and injuries.

IDEA, PO Box 236, West Milton, OH 45383
(937) 698-1027
Fax: (877) 702-8097
www.dooreducation.com

UL - Underwriters Laboratories

Provides safety-related certification, validation, testing, inspection, auditing, advising and training services to a wide range of clients, including manufacturers, retailers, policy makers, regulators, service companies, and consumers.

UL, LLC, 333 Pfingsten Rd, Northbrook, IL 60062-2096
847-664-1787
Fax: 847-407-1787
www.ul.com

ASTM - American Society of the International Association for Testing and Materials

One of the largest voluntary standards developing organizations in the world. ASTM is a not-for-profit organization that provides a forum for the development and publication of voluntary consensus standards for materials, products, systems, and services.

ASTM Headquarters, 100 Barr Harbor Dr, PO Box C700, West Conshohocken, PA, 19428-2959
(610) 832-9585
service@astm.org
www.astm.org

TSW - Total Security Warehouse

A wholesale distributor of the most widely recognized brands of access control products available on the market. We supply access control solutions to authorized dealers and specifiers from coast to coast. We provide a complete line of access control, gate operators, security products and reversing devices from DoorKing, HySecurity, FAAC, Linear, OSCO, LiftMaster, Chamberlain, and many other leading manufacturers.

TSW, 5100 W Brown Deer Rd, Brown Deer, WI 53223
(877) 816-7304
Fax: (262) 814-7302
info@totalsecuritywarehouse.com
www.totalsecuritywarehouse.com

We're social.

BD Loops

We're on the Installer's Side



Used for saw-cut installations where a 3/16" groove is cut into the **concrete or asphalt** and the wire is stuffed and sealed (using loop sealant) into the groove. Custom **polyethylene outer jacket** protects a micro-dusted nylon coated inner jacketed **16AWG stranded wire.** The saw-cut loop has a **built in backer-rod** securely fitting a 3/16" saw-cut groove eliminating the need to apply backer-rod to hold the loop to the bottom of the saw-cut groove and requires 30-40% less loop sealant to seal the groove. Both the **loop and the lead-in fit within a 3/16" saw-cut groove** preventing wasted time spent double saw-cutting or doubling blades to cut the home run lead-in.

We have the perfect sized loop for every gate:

Standard size loops ship same day as long as the order is received by 3:30 PM PST.

Driveway width		Recommended loop size		BD Loops part #		
Residential	Commercial	Residential	Commercial	20ft lead-in	50ft lead-in	100ft lead-in
8-10ft	-	3x3	-	SC 12-20	SC 12-50	-
8-10ft	-	3x4	-	SC 14-20	SC 14-50	-
8-10ft	-	3x5 or 4x4	-	SC 16-20	SC 16-50	-
9ft	-	4x5 or 3x6	-	SC 18-20	SC 18-50	-
10ft	-	4x6 or 3x7	-	SC 20-20	SC 20-50	-
12ft	10ft	4x8	6x6	SC 24-20	SC 24-50	SC 24-100
14ft	12ft	4x10	6x8	-	SC 28-50	SC 28-100
16ft	14ft	4x12	6x10	SC 32-20	SC 32-50	SC 32-100
-	16ft	-	6x12	SC 36-20	SC 36-50	SC 36-100
-	18ft	-	6x14	-	SC 40-50	SC 40-100
-	20ft	-	6x16	SC 44-20	SC 44-50	SC 44-100
-	24ft	-	6x20	SC 52-20	SC 52-50	SC 52-100

Custom sizes also available - **call local distributor for pricing and delivery**

BD Loops.com
We're on the Installer's Side

8161 Monroe Ave | Stanton, CA 90680
P: 714-723-0946 | Alt P: 714-890-1604 | F: 714-890-1603

Blade width and Groove Depth

How much of a difference can they make?

32' Loop with 15' of Lead-in



¼" Groove Width
2½" Groove Depth
Loop wrapped by hand
Takes: 5.3 liters of sealant to fill.

(6) 30oz Tubes of Sealant to fill the groove.





3/16" Groove Width
1¼" Groove Depth
With a BD Loop
Takes: 1.4 liters of sealant to fill.

(2) 30oz Tubes of Sealant to fill the groove.



Cutting at the proper depth and width can yield significant savings in loop sealant. In this example cutting 1¼" depth vs. 2½" results in 66% Savings in Loop Sealant!

At $21 per tube this would be a $84 savings for One Loop alone!



BD-LG LOOP GOOP

Polyurethane Saw-Cut Loop Sealant with Flat 3/16" Sealant Tip

Polyurethane has many advantages:

- Does not shrink or crack—it does not have an evaporation cure like most other sealants.
- Does not conduct electricity—water based sealants can facilitate shorts to ground.
- Has a low viscosity (flows easily) is easier on your hand, and is self leveling.
- Can be cleaned up with rubbing alcohol.
- 30oz Tubes—most rubber and water based products come in 28oz tubes. **BD-LG** has 7% more sealant.

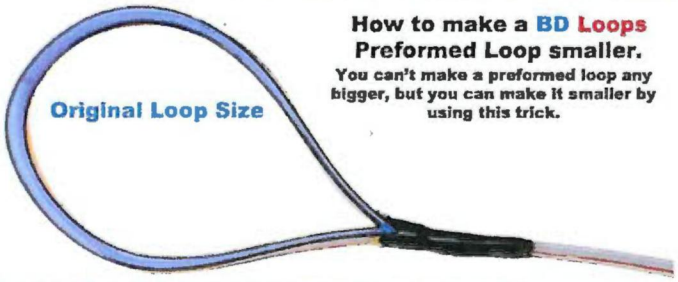

How to make a BD Loops Preformed Loop smaller.

You can't make a preformed loop any bigger, but you can make it smaller by using this trick.

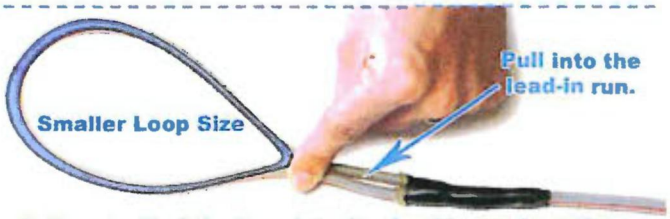

Pull up to 2' of the loop into the lead-in run to make the loop fit. Lay the loop wires side by side.

V-Cut Yoke – The best way to install the yoke area.

Example of a V-Cut Yoke



V-Cut Yoke

A wider groove is needed for the yoke (area where the loop meets the lead-in). Drop the blade twice to make a "V" cut, the V cut should be 1½ " wide at its widest point and 8"-10" in length. When sealing the yoke, place a layer of sealant below the yoke, lay the yoke into the "V" Cut groove and then cover the yoke with sealant. **Sealing the yoke this way will fully encapsulate the yoke in sealant and provides an additional layer of protection for your saw-cut loop.** Do not bend or crush the yoke area, this could damage the water tight seal.

BD Loops.com
We're on the Installer's Side

8161 Monroe Ave | Stanton, CA 90680
P: 714-723-0946 | Alt P: 714-890-1604 | F: 714-890-1603



The OVS-50 TNR Monitored Hybrid Photoelectric Through Beam offers cost-effective, stable and versatile Active Infrared detector. The AIR dual beam set offers extreme stability in all kinds of weather. Easy to see LED optical alignment. No wiring is required at the Transmitter side, which means less installation time and lower labor costs, plus there is no need to cut the driveway. The OVS-50 TNR has a battery life of eight years and a long range: up to 50 feet, point to point.

OPTEX
Sensing Innovation

OVS-50 TNR

Monitored Hybrid Through Beam

Stable regardless of weather

The OVS-50 TNR is extremely stable in rain, snow and fog.



Long range, easy to install

The OVS-50 TNR has a range of up to 50 feet point-to-point. Installation requires no concrete cutting and no wiring on the transmitter side. This reduces installation time and labor costs.

Optical Alignment Technology



Long Battery Life

The OVS-50 TNR has been designed to work with D-size lithium batteries, and OPTEX recommends the Saft LSH-20 battery. When using LSH-20 batteries in the transmitter (2 batteries total), battery life expectancy is approximately 8 years. Batteries are easy to access when they need to be replaced, and beams do not need to be realigned afterwards.

Dimensions

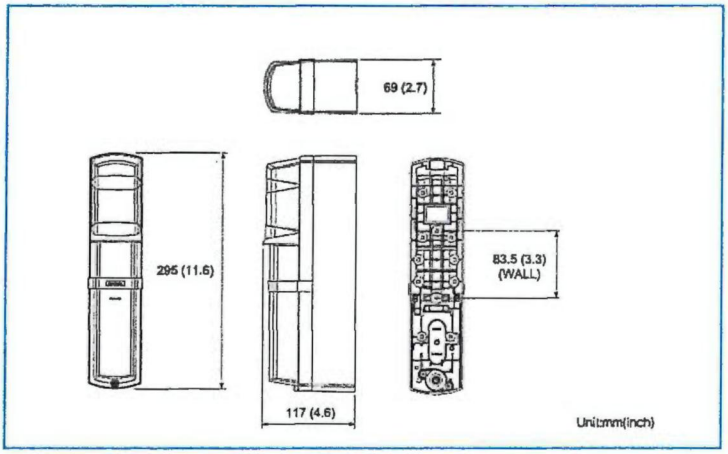

OVS-50 TNR Specifications

Description		Monitored Hybrid 50 ft. Dual Through Beam
Max. detection range		50 ft.
Detection method		Twin infrared beam interruption detection
Interruption time		Variable between 20 / 100 / 250 / 500 ms (4 steps)
Power source		Transmitter 3.6 VDC D size lithium batteries: 2 units Receiver: 12-24 VDC
Current draw		Transmitter: 130μA (25°C, DC3.6V) Receiver: 80μA (max.)
Battery life	LSH-20 by SAFT	Approx. 8 years
Output	Output	Form C relay; 30VDC 0.2A
	Output hold time	Blocked beam period +0.5 sec.
	Resistive Termination	10 ohm across NO contact
Indicator LED	Output/Level indicator (receiver)	ON: Beam not received Blinking: Beam not received sufficiently OFF: Beam received
	Power/Low battery indicator (transmitter)	ON: Power ON Blinking: Low voltage OFF: Power OFF
Operating temperature		-4°F to 140°F
Operation humidity		95% (max.)
Alignment angle		±90° horizontal, ±5° vertical
Dimensions		11.6"H x 2.7"W x 4.6"D
Weight		42.3 oz. (total weight of transmitter + receiver excluding accessories)
International protection		IP65
Listing		UL325 compliant

OPTEX Sensing Innovation

18730 S. Wilmington Ave, Unit 100
Rancho Dominguez, CA 90220
Ph 800 877-6656
Fax 310 898-1098
www.optex-vs.com

OPTEX Inc.
(East Coast Office)
8510 McAlpine Park Dr.
Suite 108
Charlotte, NC 28211

MX4621

Hy5B™ 2.0 Vehicle Detector

Another HySecurity Innovation

HySecurity's simple and reliable vehicle detector

This industry leading vehicle detector easily plugs into the Smart Touch, Smart DC and SmartCNX controllers and usually requires no adjustment during setup.

- Easy installation, no tools needed
- Smart Touch technology automatically tunes each detector to its own frequency preventing cross talk between loops
- Monitors three different metrics to determine overall loop health
- Restores loop data on power up for consistent performance
- Compensates for moving gate, allowing higher sensitivity than other detectors
- Counts vehicles including tailgaters
- Lightning resistant features protect hardware and avoid false trips
- Low power draw for solar applications
- Five year warranty



Compact design, 1-3/4 x 3-5/8 inch (4.5 cm x 9.2 cm)

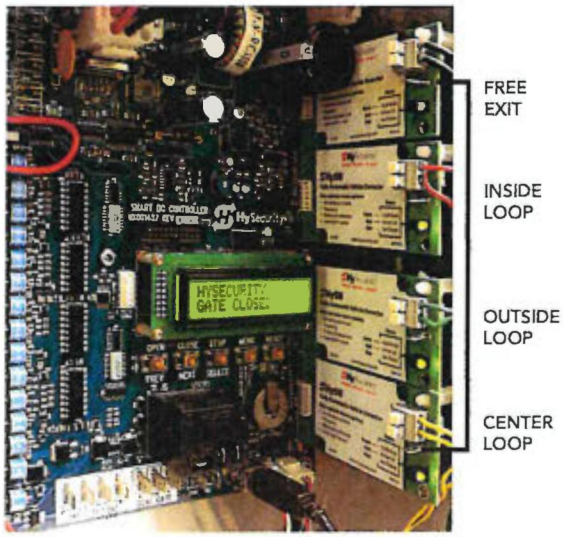

Control board offers four Hy5B sockets for free exit, inside obstruction, outside obstruction, and center loop function

Easy to retrofit

The Hy5B is backwards compatible with all Smart DC and Smart Touch controllers. For existing sites where a loop is being added or a detector has failed, the Hy5B will emulate an Hy5A with no software update. Or, load a new version of firmware to access all the capabilities of Hy5B.

For all features of Hy5B, Smart DC software must be at least version 5.55 or higher. Smart Touch software must be version 4.54 or higher.

hysecurity.com | 800-321-9947

Manufacturer of rural/ranch, residential, commercial, parking, industrial and anti-ram gate operators, barriers and accessories.

Hy5B™ 2.0 Applications



SWING AND SLIDE GATE AUTOMATION The Hy5B is perfect for use with any HySecurity gate operator for all applications such as obstruction loops or free exit loops. The improved sensitivity algorithms are effective in reducing gate strike accidents.

PARKING Where multilane entries and exits are used, loop frequency is easy to adjust using the Smart DC controls and display. The availability of vehicle counts provides parking facility operators another way to audit receipts to minimize fraud. Use the HyNet Gateway to receive data remotely, saving time and effort.

SOLAR Hy5B is power efficient, drawing only 35mW of power.

Capability	Benefit
Automatic sensitivity	Takes guesswork out of setting detector sensitivity.
Vehicle differentiation	Discerns cars from other vehicles like trucks and motorcycles. Uses data to calibrate sensitivity, and determine best setting for call and boost levels.
Automatic gate compensation	Records signal level induced by moving gate and deducts from reading, allowing higher sensitivity without risking lock up.
Improved motorcycle detection	Sensitivity algorithms allow more sensitive loops, improving the likelihood of detecting a motorcycle or high clearance vehicle that generate a low signal.
Improved lightning immunity	Resists damage and false trips due to lightning strikes.
Improved loop diagnostics	Measures and reports loop health statistics on three different metrics for faster troubleshooting of loop issues.
Vehicle counter	Counts vehicular traffic through a gate. Useful for auditing receipts in parking or managing parking inventory.
Crosstalk management	HySecurity controller coordinates readings from all installed Hy5B detectors to prevent cross talk.
Shared user interface	Hy5B set up is accessed through the Smart Touch or Smart DC controller for easy configuration.
Persistent loop signatures	Vacant loop frequencies, sensitivity data, and gate compensation data are stored on the control board in nonvolatile memory, maintaining calibration in the event of power loss. Detector can sense a vehicle on the loop, even if present during start up.
Toolless installation	All connections can be made without tools, including improved spring clamp terminals for loop wires.
Manual sensitivity control	Users can disable auto sensitivity and set sensitivity and boost manually through the controller interface. This is useful for compensating for unstable loops, electrical noise, and other loop issues.
Hy5A emulation	Machines with older software are compatible with Hy5B in emulation mode. Sensitivity is automatic. Manual sensitivity and advanced functions require a software upgrade.
Low power	35mW power consumption enables solar applications.
Warranty	5 years

SYSTEM DESIGN SUPPORT: Contact HySecurity for help with custom site requirements, CAD drawings, tech manuals or other specifications support.

VISIT HYSECURITY.COM for installation manuals, parts diagrams, wiring diagrams, specifications, image gallery, videos, training and much more.

HySecurity
a Nice group company

Contact HySecurity for an operator/parts distributor near you.
phone 253-867-3700 | 800-321-9947
hysecurity.com | sales@hysecurity.com



GATEGUARD® WIRELESS ACCESS CONTROL SYSTEM

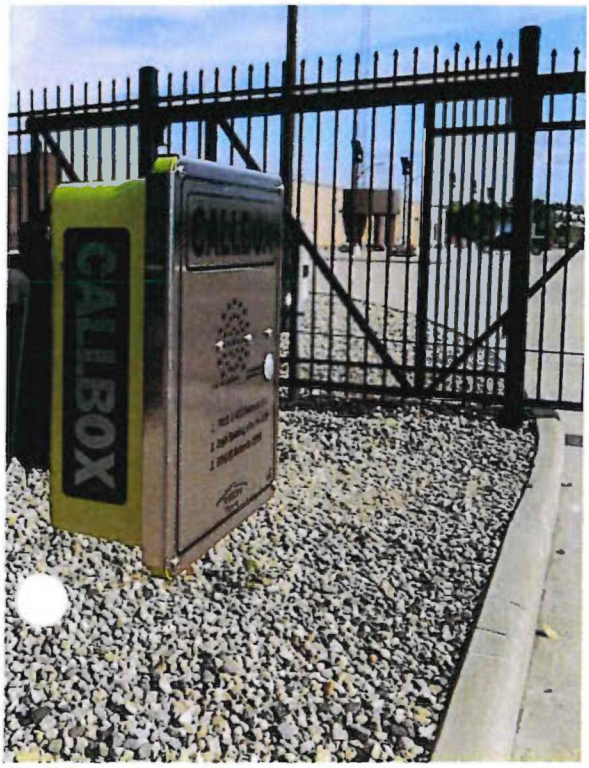

Keep Your Facility Safe!

The GateGuard system is a package of pre-programmed radios designed to provide an out-of-the-box solution for **2-way voice communication** *and* **remote gate activation.**

Industrial-grade, **long-range** (miles, not feet), **wireless** 2-way voice intercom system also allows for remote gate control from portables or base stations.

The JBS Series desktop base radio, mounted on a desk or a wall, provides a fixed communication point and remote gate control.

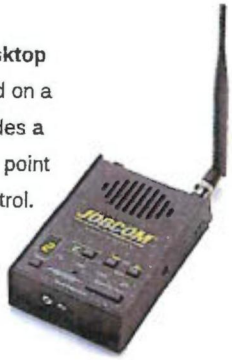

JMX Series portable radios allow personnel to communicate with visitors as well as remotely control the gate from anywhere in the facility.



The XT Series Radio Callbox mounts at the gate to provide wireless communication and direct connection to gate control.

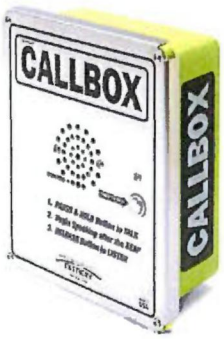

GATEGUARD WIRELESS ACCESS CONTROL SYSTEM

Keep gated areas secure, without compromising your ability to communicate long range. The GateGuard package includes: an XT radio callbox model 6 or 7, JMX portable radio, and JBS desktop base radio. Designed and Made in the USA.

MADE IN THE USA

For more information, visit www.ritron.com; call 800-872-1872; email ritron@ritron.com; or write to Ritron, Inc. at 505 W. Carmel Drive, Carmel, IN 46032.

GATEGUARD PACKAGE

- XT Radio Callbox Model 6 or 7
- JMX Portable Radio
- JBS Desktop Base Radio



ABOUT GATEGUARD

- Built for commercial and industrial applications like treatment plants, factories, warehousing, schools, and healthcare facilities with thousands currently in service.
- Also for gated communities, private residences, country clubs, farms, and more.
- Designed and manufactured in the USA.

GATEGUARD SYSTEM FEATURES & SPECS

- Bundled system of pre-programmed radios provides out-of-the-box wireless access control solution
- Includes XT Series Callbox Model 6 or 7 with built-in relay (optional entry keypad model available), JMX Series 2-Way Portable Radio, and JBS Series Desktop 2-Way Base Station Radio.
- Long-Range Communication (up to 2 miles line-of-sight) from gate to radio-equipped personnel
- No Trenching Required, Easy Installation
- Weather Proof and Tamper Resistant Callbox
- VHF MURS License-Free Business Only Model & VHF & UHF License-Required Business Only Models Available
- Alkaline Battery Powered or External Power Capable
- PC and Field Programmable
- Works With Most Other VHF or UHF Business Band Frequency Radios
- Ask Us About Compatible Accessories!

FOR MORE INFORMATION

Visit www.ritron.com; call 800-872-1872; email ritron@ritron.com; or write to Ritron, Inc. at 505 W. Carmel Drive, Carmel, IN 46032.

RITRON®
WIRELESS SOLUTIONS

© 2018 Ritron, Inc. All Rights Reserved.

SlideSmart DC™ HD



Cycle big, heavy gates

Nice

HySecurity

Heavy duty. Commercial.

Quick and easy install

Long life slide gate operator with best in class controller and battery backup.

- Move up to 3,000 lb/50 ft gate
- HD15F moves your gate fast
- Rodent proof heavy duty enclosure
- Intelligent charging system, monitors battery condition to maximize battery life
- Keep your gate moving after power loss: up to 4,000 ft/standard batteries and 25,000 ft/ extended batteries
- Easy system troubleshooting with onboard event log
- Field Programmable to specific site requirements
- Easily retrofit similar profile operators out-of-the-box
- Real time system security alerts with optional HyNet™ Gateway
- 5 year warranty



Optional base extension and retrofit adapter

Family Traits

- Best in class Smart DC™ controls
- 24VDC with battery backup
- Seamless operation with HySecurity accessories
  - HyNet™
  - Hy5B™
- 5 year warranty

Distinctive Features

- For BIG gates up to 3,000 lb
- Sturdy steel enclosure
- Side mount posts
- Fast model available



Nice 7251/7351 Residential



SlideSmart CNX Commercial



SlideSmart HD Commercial/Industrial



SlideDriver Industrial

Battery Backup. Low maintenance.

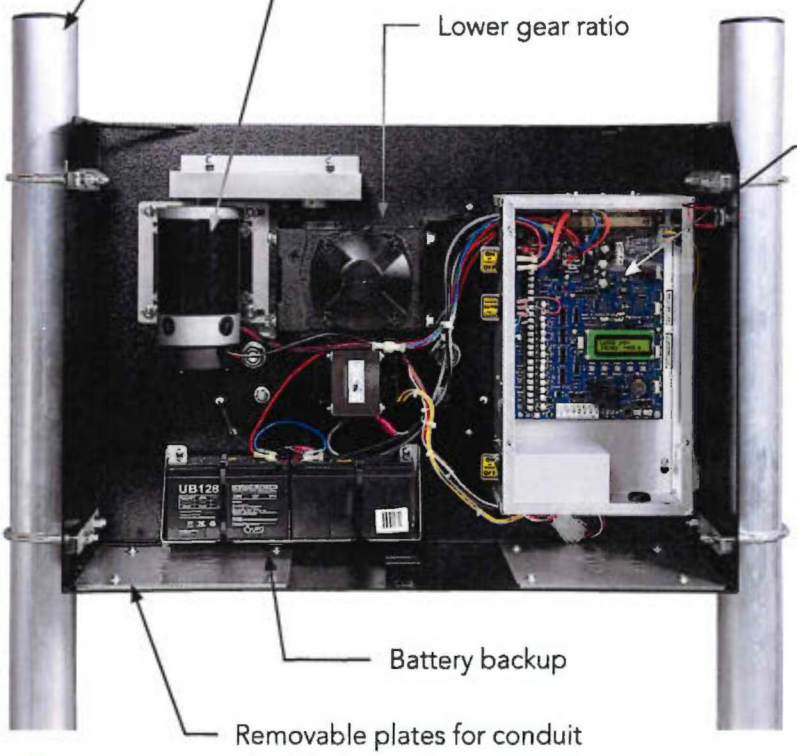

PREMIUM
Photo Eye* & ASO Edge



& hardware included
*Through Beam



MADE IN THE USA
WITH GLOBAL MATERIALS

Residential and Commercial

SYSTEM DESIGN SUPPORT: Contact Nice/HySecurity for help with custom site requirements, CAD drawings, tech manuals or other specifications support.

VISIT HYSECURITY.COM for installation manuals, parts diagrams, wiring diagrams, specifications, image gallery, videos, training and much more.



Slide Gate Operator

3 SlideSmart™ HD Models

	FAST		
Model	**SlideSmart DC HD15F**	**SlideSmart DC HD25**	**SlideSmart DC HD30**
Gate Weight Max.	1,500 lb (680 kg)	2,500 lb (1,134 kg)	3,000 lb (1,361 kg)
Gate Length Max.	50 ft (15 m)		
Pull Force*	300 lb	450 lb	500 lb
Rate of Travel	1.75, 2 or 2.25 ft/s (53, 61 or 69 cm/s) Open/Close speed set independently	0.75, 1 or 1.25 ft/s (23, 30 or 38 cm/s) Open/Close speed set independently	
Duty Cycle	Continuous		
Horsepower	1 hp	1/2 hp	1 hp
Drive	Electromechanical		
UPS Battery Backup Cycles †	Field configurable to fail open or secure when batteries deplete. **Standard battery backup gate travel:** Two 8Ah batteries. Up to 4,000 ft (1,219 m) after AC power loss. **Extended battery backup gate travel:** Two 50Ah batteries. Up to 25,000 ft (7,620 m) after AC power loss.		
Temperature Rating	-13° to 158° F (-25° to 70° C)		
Operating Voltage	24VDC		
Input Voltage	115V or 208-230V, 60/50 Hz		
Accessory Power	12VDC and 24VDC 1A each		
Communication	USB, RS-232, RS-485. Ethernet/fiber using optional HyNet™ Gateway accessory		
User Controls	Smart DC Controller with 70+ configurable settings. 32 character LCD display and 5 tact buttons or a PC using S.T.A.R.T. software.		
Relays	Two configurable user relays: 30VDC, 3A solid state and 250VAC, 10A electromechanical; Optional Hy8Relay™ for 8 additional relay outputs		
Finish	Zinc rich primer and black powder coated steel cover/chassis		
ETL Listed (UL 325)	Usage Class III, IV***	Usage Class I, II, III, IV**	
Cycle Tested	500,000 cycles		
Warranty	5 year w/product registration	5 year (7 year single-family residential) w/product registration	

* HySecurity manufacturers only reliable and powerful gate operators and provides an extra margin of power to be certain the gate works in adverse conditions. Some manufactures overstate the length and weight capacity of their operators, but HySecurity rates conservatively. Note that our pull force ratings are substantial and that extra margin of power is part of the HySecurity reputation for reliability.

** Speed setting cannot be configured to exceed 1 ft/s for Class I and II usage.

***Not for residential use or applications intended to serve the general public.

† The actual number of gate cycles available from battery depends upon gate resistance to travel, cycle length, battery size, state of charge and health, ambient temperature, accessory power draw and frequency of gate cycles during power outage.

To enable fully automatic operation, all SLIDE gate operators require a minimum of TWO monitored external entrapment protection sensors (one for each direction) to protect entrapment zones in both the open and close direction of travel. Visit www.hysecurity.com/gatesafety for more information on UL 325 standards and gate safety.

Optional Accessories - See website for complete list



Battery Backup Kit - 50 Ah



Base Extension & Retrofit Adapter



HD Heater Kit



Hy5B™ 2.0 Vehicle Detector



Hy8Relay™ Module



HyNet™ Gateway Integration



Photo Eye Kits



ASO Edge Sensors

Contact Nice | HySecurity for an operator/parts distributor near you.
phone 253-867-3700 | 800-321-9947
hysecurity.com | sales@hysecurity.com

Intertek
D0893 130719

AWID

Maximum RFID



MR-1824™
Sentinel-Prox™ Proximity Reader

AWID's MR-1824 Proximity Card Reader is a high-power reader for mid-range proximity reading distance, in a small self-contained package. Read range with cards is up to 24 inches. (Read range varies, depending upon the tag used and local conditions.) The MR-1824 reader is used frequently in parking facilities, for driver identification and vehicle access.

Metal-Compensation This reader is available in an optional **MR-1824MC** version, which includes metal-compensation. It has best read range when it is mounted on a metal surface at least as large as the reader (8 x 8 inches). Mount the **MR-1824** version at least 4 inches from *all* metal for best read range.

Installation The **MR-1824** reader is fastened by 4 screws on any non-metal wall or other surface.* The **MR-1824MC** reader starts by fastening the ferrite plates behind the reader's plastic base to the metal surface, and then fastening the reader's cover to its base. When installing the reader on a pedestal, either mount the **MR-1824** on a 4-inch-thick plastic housing as a spacer from the metal, or mount the **MR-1824MC** on a metal-plate adapter between the reader and the flange on the pedestal.



Features These readers contain (a) a 3-color LED to indicate successful card read and access-granted, (b) a 4 kilohertz beeper for attention and alarm, and (c) a "hold" circuit to delay data transmission. Both LED and beeper are controlled by the reader itself. All three functions can be controlled externally by the host system.

Testing The reader is *self-testing* – using its own LED and beeper, it needs no interface to a controller to assure the installer and cardholder of correct performance. The reader is also *self-diagnostic* – if DC power is unstable, or if electrical noise is induced in the cable, the reader resets and its LED changes to amber.

Operation AWID's proximity readers use a re-present mode that requires that the user remove the card from the reader's field before the card can be read again. This feature eliminates multiple reads from a single presentation of the card. The MR-1824 has both Wiegand data interface for basic 4-wire connection (7 wires when all features are controlled), and also RS-232 serial interface. Code transmission from both interfaces is simultaneous.

Environment The MR-1824 reader is ready for installation indoors and outdoors.* The ABS plastic two-part enclosure, quickly installed when its cover is removed, provides a secure package when the cover is fastened to the base. Epoxy resin potting protects the electronic circuits.

(*) NOTE: IF EXPOSED TO RAIN OR SNOW, UNIT MUST BE INSIDE A MINIMUM IP64-RATED HOUSING.

FEATURES

Right size for pedestal or door...
Big enough for easy card presentation

Clean, unobstrusive appearance...
Matches good architecture at site

Ready for heavy use at all sites...
Non-contact reading of cards and tags

Perfect for wall, cabinet, pedestal...
Strong two-part ABS plastic enclosure

Easy mounting...
4 screws through reader's cover

Big read range in a mid-sized unit...
Up to 24 inches with clamshell cards

Visual and audible indicators...
3-color LED and beeper inside reader

Controllable functions in reader...
LED, beeper, hold can be wired to panel

Easy power from independent source...
All MR-1824 units use 1 power supply

Quick wiring to host panel...
Basic 4-wire hook-up; 7 wires maximum

Standard Wiegand data output...
Data-0 & Data-1 panel connection

Alternative RS-232 data output...
Interface to PC or special controller

Compatible with other readers...
Wiegand interface used in other readers

Uniform code format...
Standard 26-bit plus special codes

No programming in reader...
MR-1824 is ready to read all AWID codes

Self-testing for good operation...
LED & beeper indicate performance

High value ratio...
Excellent performance; modest cost

MR-1824™

Sentinel-Prox™ Proximity Reader

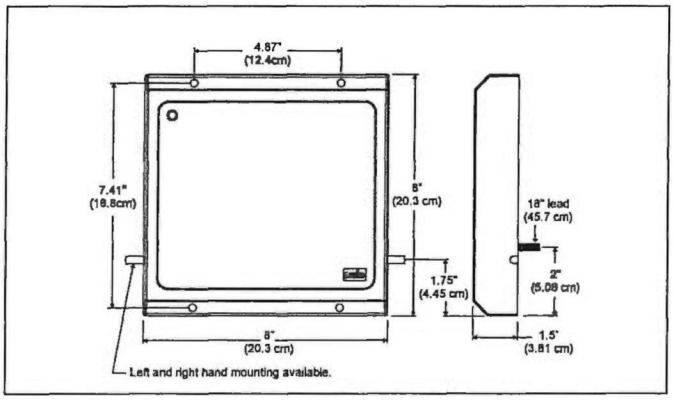

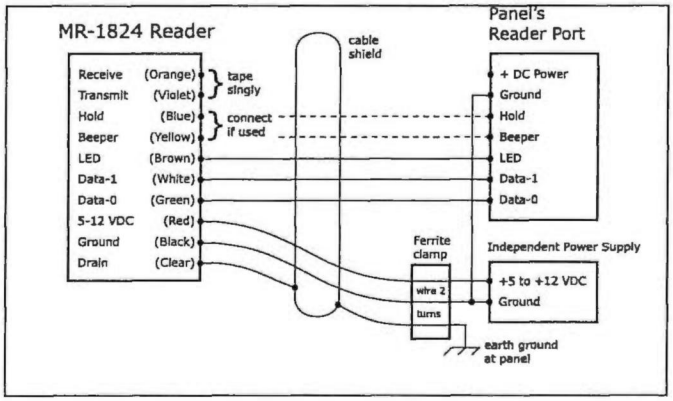

ACCESSORIES AND SUPPLIES

Mounting hardware – 4 #6-20 x 1.375" self-tapping screws, 4 plastic screw anchors (supplied). Use other fasteners as needed for mounting.

Power supply – Reader operates with voltage between +5 volts and +12 volts DC. An external linear, regulated DC power supply is required (current rating: 400 mA or more at 5 volts, 1 A or more at 12 volts). Optimum read range occurs when 12 volts DC is applied to reader.

Cable for power and data – 18 gauge, stranded, color-coded, overall shielded, not twisted pair. 4 to 7 conductors depending on connection of reader's controllable functions (LED, beeper and "hold"). For Wiegand, up to 500 feet long.

Protective housing – MR-1824 and MR-1824MC readers are suitable for outdoor installation in most cases. If a reader is to be removed from direct precipitation, bright sunlight in a hot environment, view or abuse, install the reader inside a Lexan housing. AWID suggests The Housing Company's Model PCH196 housing. Use this housing also to space the **MR-1824** away from metal, such as a pedestal or pole.

Mounting devices – Consult with supplier for utility boxes, adapter plates, spacers, poles, posts, pedestals, bollards.

Installation Sheet – Download full instructions and Technical Reference "MR-1824 – Assuring Maximum Read Range" from AWID's web site http://www.awid.com.

CREDENTIALS

Proximity cards, keytags and wafers – AWID offers a selection of cards, tags and wafers for use with the MR-1824 and MR-1824MC readers. All credentials for these readers must be AWID's products.

Ask AWID about credentials. Download the product sheet with cards, keytags, hangtags, and adhesive wafers for all of AWID's proximity readers.

DISCLAIMER: Specifications are subject to change without notice. AWID reserves the right to make changes to improve performance without impacting form, fit or function. The MR-1824 and MR-1824MC model designations are Trademarks of Applied Wireless Identifications Group, Inc. All other trademarks are property of their respective owners.

OPERATING CHARACTERISTICS

Reading Distance:
MR-1824 – Up to 24 inches (60 cm)
MR-1824MC – Up to 16 inches (40 cm)
(varies with mounting or housing, voltage applied to reader, and credential type)
Excitation Frequency:
Transmit and Receive - 125 kHz
Antenna Output:
Omni-directional low-frequency RF field
Indicators (Control by Reader and Panel):
LED – 3 colors, red-amber-green
Beeper – piezo-electric, 4kHz tone
Power Supply:
+5 volts to max +12 volts DC, linear, regulated; current rating: 400 mA at 5 volts, 1 A at 12 volts
Communication Protocols:
Wiegand electrical interface
RS-232 serial interface
Code Formats:
Determined by AWID's credentials programmed with 26 bits to 50 bits
Cable (for Wiegand Interface):
4 to 7 conductors (not twisted pairs), stranded, 18 gauge, color-coded, overall 100% shielded, plastic sheath, to 500 ft.

PHYSICAL CHARACTERISTICS

Dimensions:
MR-1824: 8.0 x 8.0 x 1.0 inches
(20.3 x 20.3 x 2.54 cm)
MR-1824MC: 8.0 x 8.0 x 1.35 inches
(20.3 x 20.3 x 3.43 cm)
Weight:
MR-1824: 25 ounces (709g)
MR-1824MC: 57 ounces (1,617g)
Material:
ABS 2-part enclosure, dark gray only. Epoxy resin potting on reader electronics
MR-1824MC: Ferrite plates behind base
Cable (Integrated with Reader):
10 conductors, 22 gauge, 18 inches long.
Overall shielded, gray plastic sheath
Mounting:
Pedestal, wall, cabinet, housing, etc.

ENVIRONMENT

Operating Temperature:
-31°F to 150°F (-35°C to 65°C)
Operating Humidity:
0% to 95% non-condensing
Protection from Environment:
Use Lexan housing when reader must be away from moisture, sunlight, view or damage.
Avoiding Interference:
Optimize reader performance by spacing or shielding reader from neighboring readers, including reader on other side of wall at door.

CERTIFICATION

ISO-9001:2000; FCC Part 15; IC; UL listed

AWID
18300 Sutter Blvd. Morgan Hill, CA 95037
Tel: (408) 825-1100 Fax: (408) 782-7402
http://www.awid.com

Proximity Card Readers

DKS offers a full line of Proximity Card Readers in different mounting styles to meet your exact needs. The Readers are sealed in epoxy, making them vandal-resistant and are ideal for both indoor and outdoor applications. We also offer Mifare Card Readers for those applications using Mifare Classic cards

OVERVIEW FEATURES TECH SPECS RESOURCES ACCESSORIES



Proximity Card Readers

The 2" to Long Range Entry Solution

DoorKing offers DK Prox proximity card readers which are compatible with the 1830 Series access controllers and almost all access controllers with a 26-bit Wiegand input. All readers feature a cosmetically appealing design that will blend with any architectural design and offer high durability and reliability. Mifare card readers are also available for those applications using Mifare Classic cards (we do not sell the Mifare cards, just the Mifare card readers).

AVI (or Automated Vehicle ID) Long Range readers operate in the same manner as proximity card systems, but with longer ranges. A typical AVI system places a tag on the vehicle, rather than having the user carry it. In this manner, a gate system will open automatically as the vehicle approaches with a properly credentialed tag. This provides convenience and is ideal in applications where only authorized vehicles are allowed entry.

Have DKProx cards or Mifare cards that are un-usable because the card number has worn off? A simple solution is to use the DK Card Identifier which allows you to read the card access code on your computer.

A Variety of Card & Tag Options Available

ASCENT C²

SECURITY BRANDS

25-C2 TWO-DOOR CELLULAR ACCESS CONTROL SYSTEM

FEATURES

- 4G LTE cellular
- 2 Wiegand inputs
- Ascent Link integration
- Control up to 2 gates/doors
- Cloud-based access control management
- Up to 10,000 app, text, and voice users
- Push and/or email event and status notifications
- 7-day timers
- Holiday timers and special-event timers
- Temporary users with permission limits
- Audit trail with detailed reports
- "Do Not Disturb" mode
- IP65-rated polycarbonate enclosure



4G LTE

powered by SUMMIT CONTROL

GET THE SUMMIT CONTROL APP

Download on the App Store | GET IT ON Google Play

MODULAR AND CONFIGURABLE

Build and configure the ideal setup to fit your unique needs with two Wiegand inputs.

POWERFULLY EXPANDABLE

It's a multi-door access control solution that grows. Network multiple units together and manage multiple entries via Summit Control.

OPEN OR CLOSED?

Check the current status of your doors or access points remotely and quickly.

RUGGED AND DURABLE

Engineered to handle whatever is thrown its way flawlessly—this unit will stand up to the harshest elements for years to come.

SECURITY BRANDS INC

LIMITED 2 YEAR WARRANTY

MADE IN THE USA FROM GLOBAL MATERIALS

SPECIFICATIONS

PHYSICAL

Dimensions	13.00"(H) x 8.50"(W) x 6.00"(D)
Shipping Weight	6 lbs.

ELECTRICAL

Input	12–24 VAC/DC 12-VDC power supply included (PS-12DC1)
Current Draw	less than 180 mA @ 12 VDC less than 150 mA @ 24 VDC with relay latched

RELAY

Contact Rating	10 A @ 120 VAC / 24 VDC
Max Switching Voltage	250 VAC / 30 VDC
Max Switching Current	15 A
Max Switching Power	240 W / 2,770 VA

COMMUNICATION

Cellular Network	4G LTE

ENVIRONMENTAL

Operating Temperature	-15 to 158 °F
Enclosure Weather Rating	IP65

⚠ *Actual voltage should be no more than 10% beyond specified range. Use of the included 12-VDC power supply is recommended.*

CONTROL IT YOUR WAY

2 DOOR

- APP
- TEXT
- VOICE
- WIEGAND DEVICES

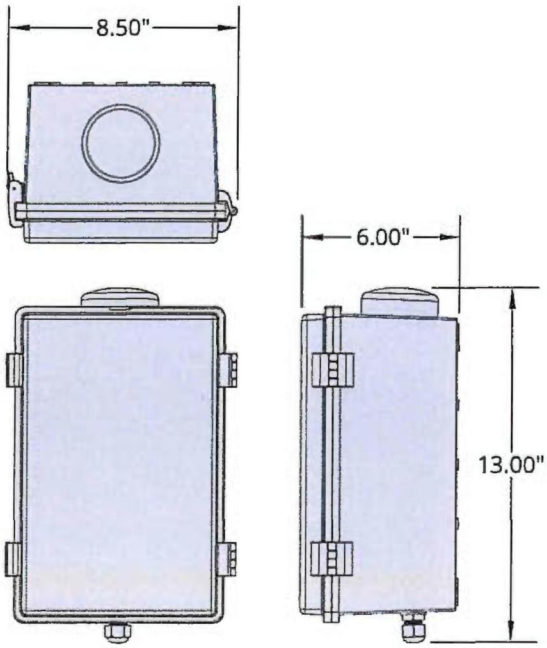

Unit includes one (1) pre-installed 3/8" NPT cable gland for wiring.

GET STARTED NOW!

PAY JUST **ONE** BILL!*

Unit includes a SIM card ready for activation.

We do ALL the legwork for you!

SUMMIT CONTROL™



visit **summitcontrol.com**

** Monthly bill covers cost of SIM card, actions gateway, servers, maintenance, development, app, and tech support.*

For more information, visit us online:
securitybrandsinc.com

SECURITY BRANDS INC™
your *partner* in access control

All rights reserved

(972) 474-6390 sales@securitybrandsinc.com 2210 Executive Dr Garland, TX 75041

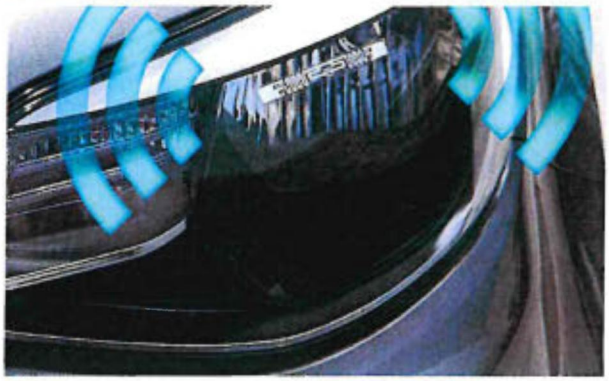

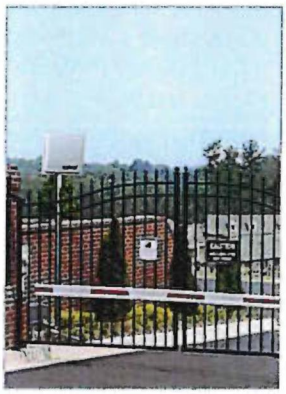

Up to 25 Feet

AVI long range adjustable from 8 ft – 25 ft (3.6 m – 7.6 m). Includes Reader Control Box.



DK Prox Decal

The DK Dot turns your phone into an access credential with no apps. Add the DK Prox Dot to the back of your mobile device (inside the case).



Outdoor Use

For outdoor applications to control access to secure areas.



Indoor Use

For indoor applications to control access to secure areas.

Technical Specifications

Up to 1,000 Device Codes

2" to 25' Read Range Options

Compatible with Cards, Tags & Transmitters

26-bit Wiegand Output

Operates with 1830 Series Systems

Specifications

DK Prox Readers

- 1815-300; up to 3-inch read range.
- 1815-301; up to 4-inch read range.
- 1815-302; up to 2-inch read range. Fits inside 1830 90 Series telephone entry systems.
- 1815-305; up to 12-inch read range.
- 1815-330; 1815-300 reader on a surface mount enclosure.
- 1815-333; same as 1815-330 but also includes a 2358-010 Tracker expansion board
- 1504-124; 1815-300 mounted on surface enclosure with built in intercom substation.

DK Prox Long Range (AVI) Reader

- 1815-350: adjustable read range; 8 ft to 25 ft.
- Two different operating modes: timing and trigger.

Mechanical

- Because physical contact is not required, proximity card readers can read card data through common building materials like: concrete, brick, stone, drywall, plaster, glass, wood, plastic...in fact, through anything but metal.
- Proximity card readers are maintenance free. There are no parts to wear out or adjust.
- Passive card technology provides an unlimited number of "card reads" with no battery to wear out.
- Passive cards, unless they are physically abused, will last virtually forever.
- Clamshell, ISO Graphic and KeyTag type cards are available.
- Read ranges are not absolute and will vary depending on several factors including where the reader is mounted, the mounting surface and product application.
- These card readers output their data in 26-bit wiegand format.
- Most card readers operate on 5-12 VDC. AVI systems may operate at different voltages.

PROXIMITY READERS	Input voltage / current
1815-300:	12 VDC – 200mA
1815-301:	12 VDC – 200mA
1815-302:	12 VDC – 200mA

2 color LED (Red, Green), Piezo Beeper
Frequency: 125 kHz
Output Format 26-bit wiegand

AVI LONG RANGE READER	Input voltage / current
1815-350:	12 VDC Regulated – 3.0 A

Frequency: 902-928 MHz
Output Format 26-bit wiegand
Operating Environment: -31°F to 149°F (-35°C to 65°C)

Dimensions and Weight

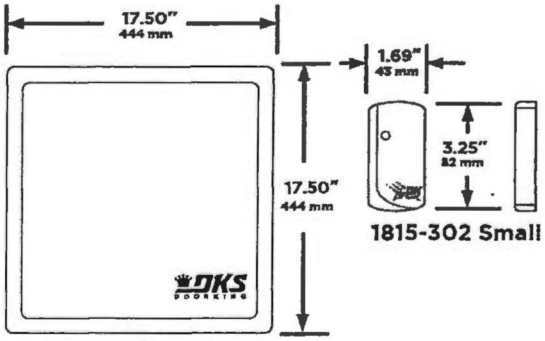

1815-350 Long Range

1815-302 Small

Dimensions and Weight

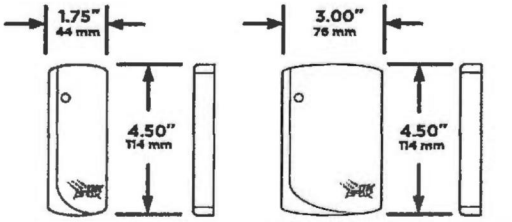

1815-300 Mullion

1815-301 Single Gang

Tech Support

Find all the documentation needed to install, program, and operate your DKS product below.

Easy Connect | Quick Start Guides | Owner's Manuals | Accessory Manuals | Tech Tip Videos

View All Tech Support Documentation

Resources



Card Readers DK Prox | Literature

View Online Download



Access Devices | Brochure

Download

DKS Videos



DKS – DoorKing, Inc. – Company Overview

View All DKS Videos

Featured Accessories



DK Prox DOT



AVI Windshield / Headlight / License Plate Tag



Cards, Fobs & Tags



Access Card Scanners & Software

View All Accessories

Watch Tech Tip Videos

Activate Your Device

Programmer & App Logins

Get Tech Support

©2025 Doorking.
All rights reserved.
Website Design by
Dogs of Design Studios

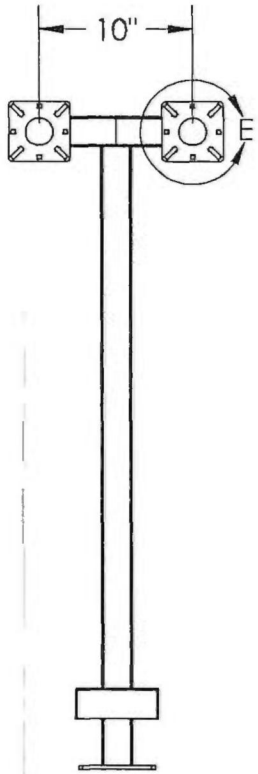

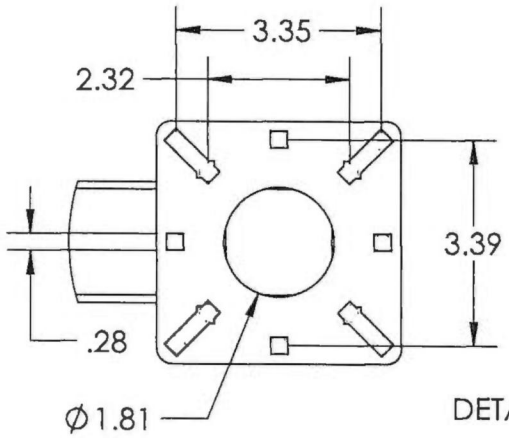

DETAIL E

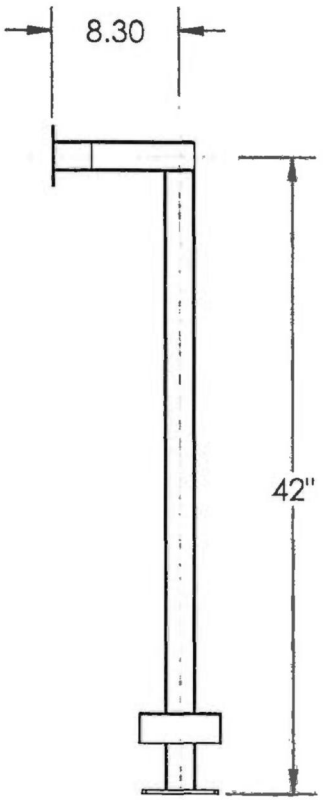

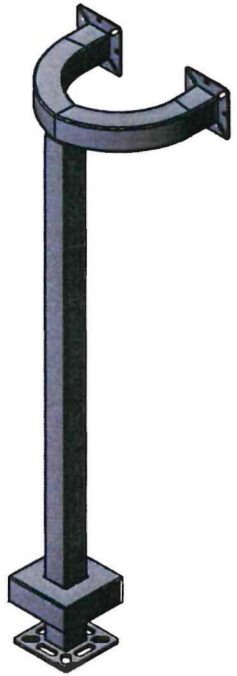

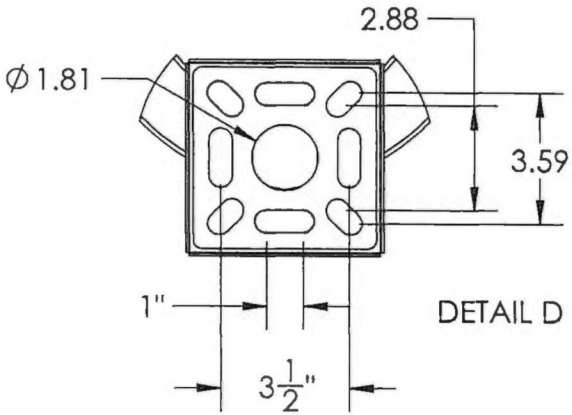

DETAIL D

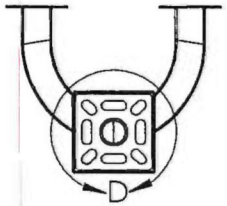

NOTES:
1/2" Ø MOUNTING HARDWARE IS RECOMMENDED FOR 5X5 BASEPLATE MODELS. L-BOLT-500, STUD-ANCHOR-500.
5/8" Ø MOUNTING HARDWARE IS RECOMMENDED FOR 8X8 AND 12X12 BASEPLATE MODELS. L-BOLT-625, STUD-ANCHOR-625

PEDESTALPRO.COM
1-800-660-3072

UNLESS OTHERWISE SPECIFIED:
DIMENSIONS ARE IN INCHES
TOLERANCES:
FRACTIONAL ±1/32
ANGULAR: ±2°
TWO PLACE DECIMAL ±0.010
THREE PLACE DECIMAL ±0.005

INTERPRET GEOMETRIC TOLERANCING PER: ASME Y14.5 -2009

NAME DATE
DRAWN
CHECKED

PROPRIETARY AND CONFIDENTIAL
THE INFORMATION CONTAINED IN THIS DRAWING IS THE SOLE PROPERTY OF PEDESTALPRO LLC. ANY REPRODUCTION IN PART OR AS A WHOLE WITHOUT THE WRITTEN PERMISSION OF PEDESTALPRO LLC IS PROHIBITED.

TITLE:
INSTALLATION

Thursday, October 25, 2018 2:57:46 PM

SIZE A | PART NO. 42-TT | REV A

WEIGHT: NO SCALE SHEET 1 OF 3

ITEM NO.	PART NUMBER	DESCRIPTION	QTY.
1	42-TT	2x2 STEEL TUBE	1
2	BASE PLATE 5	5" STANDARD BASE PLATE	1
3	COVER PLATE 5	5" STANDARD COVER PLATE	1
4	FACE PLATE 4	4" STANDARD FACE PLATE	2
5	--	1/4-20 X .50 ZINC PL CARRIAGE BOLT	4
6	--	1/4-20 ZINC PL HEX NUT	4

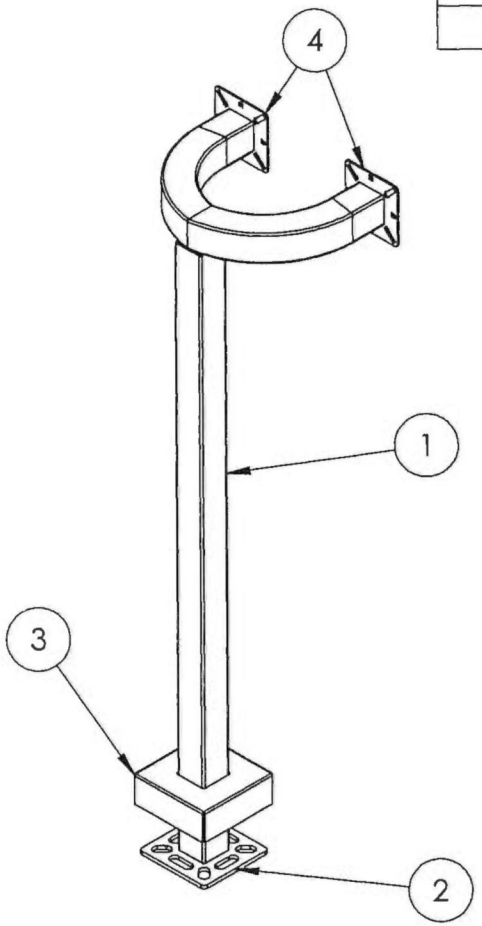

NOTES:
1. BUTT WELDED SECTIONS ARE NOT ALLOWED, EACH SECTION OF TUBE MUST BE FROM CONTINUOUS STOCK.
2. ALL WELDS ARE TO BE CONTINUOUS FILLET WELDS UNLESS NOTED OTHERWISE.
3. SEE STANDARD PREPARATION AND COATING INSTRUCTIONS FOR COATING PROCEDURE AND COLOR.
4. FASTENERS ARE TO BE BAGGED AND SHIPPED WITH PEDESTAL.
5. SEE STANDARD PACKAGING INSTUCTIONS FOR PACKAGING PROCEDURE.

PEDESTALPRO.COM
1-800-660-3072

UNLESS OTHERWISE SPECIFIED:
DIMENSIONS ARE IN INCHES
TOLERANCES:
FRACTIONAL ±1/32
ANGULAR: ±2°
TWO PLACE DECIMAL ±0.010
THREE PLACE DECIMAL ±0.005

INTERPRET GEOMETRIC TOLERANCING PER: ASME Y14.5 -2009

NAME DATE
DRAWN
CHECKED

PROPRIETARY AND CONFIDENTIAL
THE INFORMATION CONTAINED IN THIS DRAWING IS THE SOLE PROPERTY OF PEDESTALPRO LLC. ANY REPRODUCTION IN PART OR AS A WHOLE WITHOUT THE WRITTEN PERMISSION OF PEDESTALPRO LLC IS PROHIBITED.

TITLE: ASSEMBLY

Thursday, October 25, 2018 2:57:46 PM

SIZE A | PART NO. 42-TT | REV A

WEIGHT: NO SCALE SHEET 2 OF 3

GATE 1, 3, 4, 5.

KNOX®
When seconds matter®

KNOX GATE & KEY SWITCH®

Eliminate perimeter barriers that delay emergency response with the Knox Gate & Key Switch. Override electronic gates and lower voltage equipment to allow emergency access into communities, apartment complexes, parking garages, pedestrian gates, industrial receiving areas and much more.

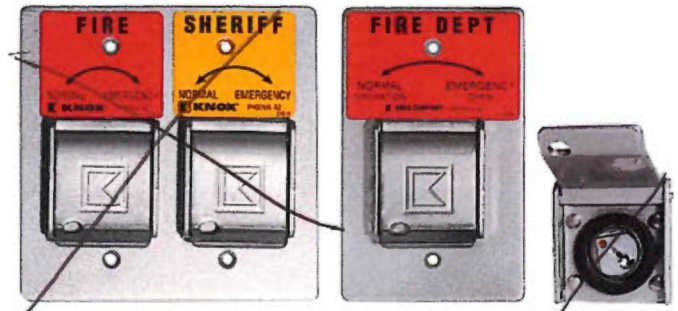

Dual Gate & Key Switch on Mounting Plate
Model #3503

Single Gate & Key Switch on Mounting Plate
Model #3502

Single Gate & Key Switch
Model #3501

FEATURES

- One position, two position or momentary switch
- Face plate and lock cover ensure weather resistant operation
- Dual locks enable shared access with other agencies

BENEFITS

- Gain rapid access through electronic gates without forced entry
- Overrides electronic gates, motorized doors, electrical switches
- Can share access with multiple agencies
- Utilizes Knox Master Key solution

OPTIONS

- Single or dual key switch
- Fire, EMS, security or law enforcement identification labels

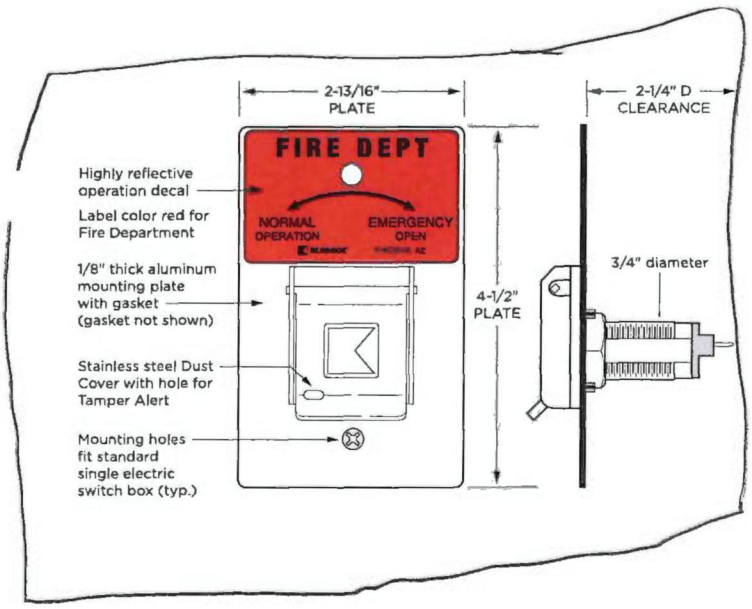

ELECTRICAL DATA

- Switch: SPDT or DPDT
- 7 A resistive, 4 A inductive, (sea level), 28 VDC
- 7 A resistive, 2.5 A inductive, (50,000 ft.), 28 VDC
- 7 A resistive or inductive, 115 VAC, 60 Hz
- UL* and CSA listed: 7 A, 250 VAC
- Temperature tolerance up to +180º F

ORDERING SPECIFICATIONS

To insure procurement and delivery of the Knox Gate & Key Switch, it is suggested that the following specification paragraph be used:

Dimensions: Requires 2 1/4" recessed depth x 3/4" diameter

Switch: SPDT or DPDT; 7 A resistive, 4 A inductive, key removable two position

Mounting: Key switch is designed to be recess mounted

P/N: 3500 Series Knox Gate & Key Switch (mfr's cat. ID)

Mfr's Name: KNOX COMPANY

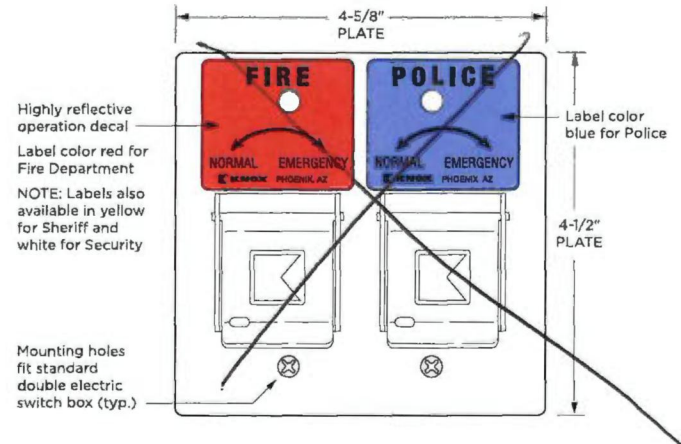

ABOUT KNOX COMPANY

Since 1975, the Knox Company has successfully developed innovative rapid access solutions for first responders with products that provide fast, safe, and secure entry into commercial, industrial, and residential properties, while minimizing damage and maximizing safety. Today, more than 15,000 fire, EMS, and law enforcement departments/agencies depend on Knox products to gain access into over one million buildings/properties.

1601 W. DEER VALLEY RD. PHOENIX, AZ 85027 | T. 800-566-9269 | INFO@KNOXBOX.COM | KNOXBOX.COM
©Knox Company. All rights reserved.
MKT-KBSPEC-0026-E

Colusa County

Agenda Request Form

Item ID#: 2025-79 **Agenda Date:** 11/4/2025 **Item 10**

COUNTY ADMINISTRATIVE OFFICE

Appoint Assistant County Administrative Officer and County Counsel as real property negotiators for property located at 90 King Air Drive, Colusa, CA and 284 Piper Lane, Colusa, CA.

Detailed Description/Background of Request

Fiscal Impact/Funding Source
The County has an interest in purchasing the real property located at 90 King Air Drive, Colusa and 284 Piper Lane, Colusa. In order to evaluate the possible terms of any such purchase, this agenda item seeks the appointment of the Assistant County Administrative Officer and County Counsel as real property negotiators for the property.

Action for the Clerk
None

Prior Board Action
None

Attachments:
None

Colusa County

Agenda Request Form

Item ID#: 2025-64 **Agenda Date:** 11/4/2025 **Item II.1**

HUMAN RESOURCES

Approve Memorandums of Understandings (MOU's) with the Colusa County Employees Associations (CCEA)**; Miscellaneous, Confidential and Professional-Administrative Units,** effective October 1, 2025.

Detailed Description/Background of Request
Pursuant to the provisions of the Meyers-Milias-Brown Act (Government Code Sections 3500 Et seq.) and the Colusa County Personnel Rules, County representatives have met and conferred with representatives of the Colusa County Employees' Association ("CCEA") regarding the wages, hours and working conditions of those County employees assigned to the Miscellaneous, Confidential, and Professional-Administrative Bargaining Units. These negotiations have resulted in tentative agreements which have been ratified by the CCEA membership. Draft Memoranda of Understanding ("MOU" or "MOUs") with each of these bargaining units are now being presented to the Board for consideration and final approval.

Each agreement is consistent with the bargaining authority granted by the Board to its representatives in these negotiations. The overall "theme" of the agreements is to build upon previously adopted recruitment and retention strategies while working within the County's fiscal constraints. Collectively, they support the County's commitment to provide responsive, quality governmental services in a fiscally responsible manner. The agreement highlights are as follows (details of each provision are contained in the attached MOUs):

Miscellaneous, Confidential, and Professional – Administrative Units

- **Term:** 2 years beginning October 1, 2025 and ending September 30, 2027.

  - **Salaries / Wages:** In lieu of a COLA in 2025 & 2026, members shall receive the following one-time lump sum payment to be issued no later than 30 days from the acceptance of the negotiated package:

1. Employees with at least 12 months of service with the County shall receive a lump sum payment of $1500.
2. Employees with less than one year of service with the County shall receive a lump sum payment of $750.
3. The parties agree that these are one-time payments which do not meet the definition

of compensation earnable nor does it qualify as any applicable special compensation for CalPERS reporting purposes. The County will issue this payment as a separate check from normal wages.

- **Salaries / Bilingual Pay:** Adjust bilingual pay to recognize two levels of proficiency. Qualified employees will receive the current rate of $80 per month for Level I (speaking only) and $100 per month for Level II (speaking, reading, and writing).

- **Holidays:** The County declares Christmas Eve and Juneteenth be added into the existing holiday schedule.

- **Holidays / Floating Holiday**: Employees covered by this Agreement may, each fiscal year, select one floating holiday not identified as a holiday in the MOU (Article VI-B); to be codified in each unit MOU.

- **Holidays / Declared:** The County will recognize newly declared single-occurrence federal observances, commemorative days, or national moments of remembrance that are not designated as recurring federal holidays established by an act of Congress or Presidential proclamation that occurs after execution of this contract, provided the holiday is not designated as a permanent, recurring federal holiday observed, nationally. Permanent, recurring federal holidays must be bargained.

- **Vacation Leaves:** Employees may request conversion into cash payments of up to forty (40) hours of accrued vacation not more than once in a fiscal year or elect such cash conversion to be deposited into a deferred compensation account in the employee's name.

- **Health and Welfare / Cafeteria Plan:**

  Effective December 1, 2025 and each December 1st thereafter, the County will make non-elective contributions into the Cafeteria Plan on behalf of each represented employee who is enrolled in the CalPERS medical plan pursuant to Section A.3., sufficient that when combined with the MEC totals the following:

  1. For employees who are enrolled in employee only coverage, the County will contribute a dollar amount sufficient that when combined with the MEC is the equivalent of the actual premium, for employee only coverage based upon CalPERS Gold plan.
  2. For employees who are enrolled in employee plus one coverage, the County will contribute a dollar amount sufficient that when combined with the MEC is the equivalent of the actual premium, for employee plus one coverage based upon CalPERS Gold plan.
  3. For employees who are enrolled in family coverage, the County will contribute a dollar amount sufficient that when combined with the MEC is the equivalent of the actual premium for family coverage based upon CalPERS

Gold plan.

In the event an employee has excess County Cafeteria contributions (before or after AFLAC or Colonial), the dollar equivalent thereof shall be contributed to the employee's Health Reimbursement Account (HRA) to the extent allowable by law.

Upon expiration of the MOU, County contributions shall remain at the 2027 contribution rates until such time as an alternative agreement is reached or alternative terms are imposed following the exhaustion of impasse and fact-finding procedures, if applicable.

- **Retirement – 457 Deferred Compensation Plans:** The County will increase the contribution by $30, $40, and $50 respectively at each tier, which will allow for a maximum contribution from the County of one-hundred dollars ($100.00) per month. To qualify for matching contributions, employees must contribute an amount equal to or greater than the plan minimum contribution.

  1. Employees with up to seven (7) years of County service, $60.00 per month.
  2. Employees with seven (7) to fifteen (15) years of County service up to $80.00 per month.
  3. Employees with more than fifteen (15) years of County service up to $100.00 per month.

- **Health Reimbursement Arrangement (HRA)**: The County will increase the contribution from $50 to $75 per month into individual qualified HRA accounts for each active employee.

- **Bereavement Leave**: After five (5) days the employee may use any paid leave for bereavement. Previously, employees were limited to using sick leave. Employee may be asked to provide proof of death within thirty (30) days.

- **CCEA Rights / Association Leave Bank**: the County shall contribute **twenty-four (24)** hours per contract year to a CCEA Association Leave Bank to be used by designated CCEA representatives to conduct **representational duties on behalf of bargaining unit members, excluding activities directly related to negotiations.** Designated CCEA representatives who utilize Association Leave Bank hours shall not suffer a loss of compensation or other benefits. **Unused hours shall not roll over from year to year and have no cash-out value.**

- **Housekeeping:** Each MOU includes non-economic, non-substantive clean-up language intended to correct typographical errors, clarify existing benefits and/or remove obsolete language, or to clean-up the Personnel Rules.

Fiscal Impact/Funding Source
The approximate fiscal year 2025-26 cost of these MOUs will be approximately $1,011,148. Of this amount, about $287,071 will be charged to the General Fund. This expense is budgeted in the FY25-26 adopted budget contingencies account. Any expenses above funds in contingencies will be drawn from LATCF (Local Assistance and Tribal Consistency Funds) to cover those expenses.

The new cost in Fiscal Year 2026-27 will be approximately $836,144. Of this amount about $241,629 will be charged to the General Fund. The FY 2026-27 costs will be included in the budget.

The new cost in the first quarter of Fiscal Year 2027-28 will be approximately $209,036. Of this amount about $60,407 will be charged to the General Fund. The FY 2025-26 costs will be included in the budget.

Action for the Clerk
Obtain necessary signatures.

Prior Board Action
None.

Attachments:
1. CCEA CONFIDENTIAL MOU 2025-2027 FINAL APPROVED DRAFT no comments
2. CCEA MISCELLANEOUS MOU 2025-2027 FINAL APPROVED DRAFT no comments
3. CCEA PROFESSIONAL & ADMIN MOU 2025-2027 FINAL APPROVED DRAFT no comments
4. CCEA MISCELLANEOUS MOU 2025-2027 FINAL APPROVED DRAFT redline
5. CCEA PROFESSIONAL & ADMIN MOU 2025-2027 FINAL APPROVED DRAFT redline
6. CCEA CONFIDENTIAL MOU 2025-2027 FINAL APPROVED Redline

MEMORANDUM OF UNDERSTANDING

Between

THE COUNTY OF COLUSA

And

THE COLUSA COUNTY EMPLOYEES' ASSOCIATION
(Confidential Bargaining Unit)

TERM
October 1, 2025 – September 30, 2027

TABLE OF CONTENTS

PREAMBLE 4

ARTICLE I – RECOGNITION 4

ARTICLE II – CCEA RIGHTS

A. CCEA Rights 4
B. Dues Deduction 4
C. Public Employee Communication 5
D. Attendance at Board of Supervisors' Meetings 6
E. Association Leave Bank 6

ARTICLE III – MANAGEMENT RIGHTS 7

ARTICLE IV – GENERAL PROVISIONS

A. Strikes and Lockouts 7
B. No Reprisals 7

ARTICLE V – SALARIES

A. Salaries 7
B. Confidential Pay 8
C. Bilingual Pay 8
D. Standby Pay and Emergency Call Back Pay 8
E. Overtime 9
F. Temporary Promotions 9
G. Out of Class Assignments 10
H. Agricultural Equipment Operator Assignments 10
I. Inpatient Interventionist Assignments 10
J. Compensation for Chaperones Working 24-Hour Schedule 11

ARTICLE VI – HOLIDAYS

A. Holidays 11
B. Floating Holiday 12
C. Newly Declared Federal Holidays 12
D. Holiday Compensation 13

ARTICLE VII – LEAVES

A. Vacation 13
B. Sick Leave 15
C. Bereavement Leave 16
D. Jury Duty or Court Witness 16
E. Education Leave 16
F. All Leaves Recognized by Law 16

TABLE OF CONTENTS

ARTICLE VIII – HEALTH AND WELFARE

A. Medical Insurance 17
B. Dental Insurance 17
C. Cafeteria Plan 18
D. Medical-In-Lieu 18
E. Part Time Employees 19
F. Vision Care and Employee Assistance Programs 19
G. Health Reimbursement Arrangement 19
H. Employee Wellness Program 20
I. Health Care Compliance 20

ARTICLE IX – RETIREMENT

A. Retirement Plan 20
1. Retirement Formulas 20
2. Retirement Plan Contributions 20
B. Internal Revenue Code Section 457 Deferred Compensation Plans 21

ARTICLE X – MISCELLANEOUS

A. Personal Protective Equipment 21
B. Required Licenses 22
C. Layoffs 22

ARTICLE XI – SAVINGS 23

ARTICLE XII – PERSONNEL RULES 23

ARTICLE XIII – FULL UNDERSTANDING 22

ARTICLE XIV – TERM 23

SIGNATURES 23

PREAMBLE

This Memorandum of Understanding ("MOU" or "Agreement") is entered into by and between the County of Colusa ("County") and the Colusa County Employees Association ("CCEA" or "Association") and sets forth the wages, benefits, hours of work, and other terms and conditions of employment for County employees assigned to the Confidential Bargaining Unit.

ARTICLE I
RECOGNITION

Pursuant to Government Code Section 3500, et seq. and applicable provisions of the Colusa County Personnel Rules, the County recognizes the CCEA as the exclusive representative for all County employees assigned to the Confidential Bargaining Unit.

ARTICLE II
CCEA RIGHTS

A. CCEA Rights

1. CCEA shall have all rights and privileges provided by the United States Constitution, the California State Constitution, Federal law, California State law, and the Colusa County Personnel Rules.

B. Dues Deduction

1. The County shall deduct CCEA membership dues and any other agreed-upon payroll deductions to the extent permitted by law from the monthly pay of each bargaining unit employee in accordance with the procedures set forth herein.

a. Dues paying bargaining unit employees who have affirmatively consented to or authorized dues deductions shall be entitled to have dues deducted upon signing and filing with CCEA an authorization form provided by Association. CCEA will notify the County of the employee's name and the amount of dues to be withheld. The dues deduction form currently in use may continue to be utilized by CCEA.

b. The County agrees to direct each bargaining unit employee to CCEA in response to any questions or concerns about dues or any other mutually agreed payroll deduction.

c. CCEA is responsible for providing the County with timely information about changes to employee dues and any other lawful CCEA-related payroll deductions.

d. Dues withheld by the County shall be transmitted monthly to the CCEA officer designated in writing by the Association as the person authorized to receive the funds at the address specified.

e. A bargaining unit employee's earnings must be regularly sufficient after other legal and required deductions are made to cover the amount of the authorized CCEA dues deductions. If a bargaining unit employee is in a non-pay status during only part of the pay period and the salary is not sufficient to cover the full withholding, no deduction shall be made.

f. CCEA shall refund to the County any amounts paid to it in error upon presentation of supporting

evidence. The County will deduct and remit to CCEA any amounts which were not deducted in accordance with the procedures prescribed herein.

2. The County shall make payroll deductions in reliance on CCEA's certification that the Association has and will maintain an authorization signed by each employee who affirmatively consents to pay CCEA membership dues. Similarly, the County shall only cancel or modify membership dues or any other mutually agreed payroll deduction for any bargaining unit employee in reliance on information provided by CCEA to the extent permitted by law.

3. The County shall not request that CCEA provide a copy of any bargaining unit employee's authorization unless a dispute arises about the existence or terms of the authorization.

4. CCEA shall indemnify, defend, protect and hold harmless the County and its elected and appointed officials, officers, employees, officers and agents from and against any and all claims, liabilities, losses, damages, fines, penalties, claims, demands, suits, actions, causes of action, judgments, costs and expenses arising from the application of this section, including, but not limited to, any claims made by bargaining unit employees for the return of membership dues deducted by the County in reliance on CCEA's certification, and any claims made by any bargaining unit employees for any deduction cancellation or modification the County made in reliance on the information provided by CCEA.

C. Public Employee Communication

1. This provision applies to all new employees hired into CCEA bargaining unit positions and is intended to comply with the provisions of Government Code, sections 3555 et seq.

    a. The County will provide CCEA with not less than ten (10) calendar days' advance written notice of the time, date and location of all new employee orientation meetings, unless an urgent and unforeseeable need for a new employee orientation meeting precludes the County from providing CCEA with ten (10) calendar days' advance notice. The advance notice will include the number of CCEA bargaining unit employees attending the orientation meetings. Notice will be made by way of email to the CCEA President or another contact person designated by CCEA.

    b. Upon request, CCEA will be given up to ten (10) minutes as part of the new employee orientation meetings to present information to bargaining unit employees generally relating to CCEA's role as representative, CCEA membership information, the rights and obligations created by the MOU and County personnel rules, and to answer questions. One (1) CCEA representative may present information to the new employees. Management representative shall excuse themselves and not be present during CCEA's portion of the new employee orientation meetings.

    c. The CCEA representative who present information at the new employee orientation meetings may do so while on duty without the loss of compensation, provided CCEA advises the Human Resources Director of the names of the employees who will be presenting information on behalf of CCEA at the new employee orientation meetings.

    d. The County shall not disclose the date/time/place of the new employee orientation to anyone other than the new employees and their departments, CCEA, and any vendors who are contracted to provide a service at the new employee orientation.

2. Information Requirements – The County will provide CCEA with a digital file via email to the email address designated by CCEA containing the following information for each employee to the extent the County has the information on file:

   - Name
   - Job title
   - Work location
   - Personal telephone number (may be home or cellular as provided by employee)
   - Home address
   - Personal email addresses if provided by the employee and on file with the County (new hires only) unless the employee submits a written request to the County and CCEA to withhold disclosure of his/her personal email address

   The above information will be provided on a monthly basis, except that the County is not required to provide personal telephone numbers, home addresses or personal email addresses unless requested by CCEA.

D. Attendance at Board of Supervisors' Meetings

1. A maximum of two (2) CCEA representatives may simultaneously attend any and all Board of Supervisors meetings on County time including budget hearings. The names of CCEA representatives who are authorized to attend Board of Supervisors meetings on County time must be provided to the Human Resources Director on or before July 1 of each year. Any combination of two (2) authorized CCEA representatives may attend the meetings at any given time.

E. Association Leave Bank

1. Commencing on October 1, 2025, and each October 1 thereafter, the County shall contribute twenty-four (24) hours per contract year to a CCEA Association Leave Bank to be used by designated CCEA representatives to conduct representational duties on behalf of bargaining unit members, excluding activities directly related to negotiations. Designated CCEA representatives who utilize Association Leave Bank hours shall not suffer a loss of compensation or other benefits. Unused hours shall not roll over from year to year and have no cash-out value.
2. **Request and Notification:** Union Representatives shall request Association Leave Bank time from their immediate supervisor in advance whenever possible, with a courtesy copy to the HR Director. Requests shall state the date and anticipated start/end time and note "Union representational duties." No employee names or confidential details are required.
3. **Tracking:** The HR Department shall track Association Leave Bank usage and provide quarterly usage reports to the Union upon request.
4. **Designated Representatives:** The Union shall annually provide the County with a list of designated representatives authorized to use Association Leave Bank time. Only those listed may access the Bank.
5. **Additional Time:** Any time used beyond the annual allotment shall be unpaid unless otherwise approved in writing by the County.

ARTICLE III
MANAGEMENT RIGHTS

Except as specifically limited by the terms of this MOU, the County, through its Board of Supervisors, shall have all management rights provided by the United States Constitution, the California State Constitution, California State Law, and Colusa County Personnel Rules.

ARTICLE IV
GENERAL PROVISIONS

A. Strikes and Lockouts

1. The CCEA agrees that during the term of this Agreement, neither it nor its officers, agents or members will engage in, encourage, sanction, support or suggest any strikes, work stoppages, slowdowns, or any other similar actions which would involve suspension of, or interference with, the normal work of the County.

2. The County will not lockout employees during the term of this Agreement.

B. No Reprisals

1. The County shall not interfere with or discriminate against any employee by reason of his or her membership in the CCEA or activity approved by this Agreement, nor will the County discourage membership in the CCEA or encourage membership in any other employee organization.

2. The CCEA recognizes its responsibility as the exclusive representative and agrees to represent all employees without discrimination, interference, restraint or coercion.

3. The provisions of this Agreement shall be applied equally to all employees without discrimination as to political opinion or affiliation, race, color, religious creed, sex, marital status, actual or perceived sexual orientation, age, national origin, military, or veteran status, genetic information, gender, gender identity, gender expression, medical condition, physical or mental disability.

ARTICLE V
SALARIES

A. Salaries

1. **One-time Lump Sum Payment**: In lieu of a Cost-of-Living (COLA) adjustment in 2025 and 2026, members shall receive the following one-time lump sum payment to be issued no later than 30 days from the acceptance of the negotiated package:
   - Employees with at least 12 months of service with the County shall receive a lump sum payment of $1500.
   - Employees with less than one year of service with the County shall receive a lump sum payment of $750.

   The parties agree that these are one-time payments which do not meet the definition of compensation earnable nor does it qualify as any applicable special compensation for CalPERS reporting purposes. The County will issue this payment as a separate check from normal wages.

2. **Re-Opener Clause**: The County and CCEA shall agree to reopen negotiations limited to discussions regarding salary increases and lump sum payments only no later than September 1, 2026.

3. **Me-too Clause**: If during the term of this Memorandum of Understanding, the County grants any across-the-board or other uniform wage/salary increase (excluding regularly scheduled step increases, pre-existing contractually mandated increases, or any other legally mandated salary increase) to any employee or defined class of employees, including but not limited to employees of all recognized bargaining units, the County will grant the same wage/salary increase for all represented employees covered by this MOU on the same date, unless the wage/salary increase was granted in exchange for a reduction to a current benefit. For purposes of this provision, an across the board or uniform wage/salary increases includes any increases granted as percentages of existing wages/salaries, fixed dollar amounts, formula-based increase and tiered increases within identifiable employee classifications and groups, but excludes reclassifications and salary range adjustments for individual classifications.

B. Confidential Pay

1. Employees covered by this Agreement are confidential employees as defined in Colusa County Personnel Rules §1.122.4(c)(8) and will receive differential compensation in an amount equal to four percent (4%) of their base compensation annually.

C. Bilingual Pay

1. Bilingual Pay shall be paid to those qualified employees in positions where the County receives a benefit from the employee's ability in the second language. Effective December 1, 2025, qualified employees will receive bilingual pay based on their level of proficiency. Level I (speaking only) will be eligible for $80 per month and Level II (speaking, reading & writing) will be eligible for $100 per month.

2. The determination of County benefit shall be based on the Department Head's recommendation and approval of the Human Resources Director provided that such approval shall not be unreasonably withheld. Qualification shall be based on passing an approved language proficiency test modeled on the CHP proficiency test ("Test") and demonstrated proficiency in speaking, understanding, writing and reading the language.

   Employees currently receiving bilingual pay will be placed in a tier based on current test scores. If the original test is not available, an assessment will need to be completed; the employee will remain at Level I until the assessment takes place. For employees whose assessment cannot be completed by December 1, 2025, any resulting adjustment in pay will be retroactive to December 1, 2025 for those employees only.

D. Emergency Standby Pay and Call Back Pay

1. Emergency Standby Pay of $25.00 per day shall be paid to employees required to be available outside their normal work hours on a standby basis for "emergency work" whether or not called back to work. For purposes of this section, emergency work is work that must be performed in response to an unforeseen sudden event which requires immediate response to prevent, mitigate or eliminate a substantial hazard to life, health, or property.

Employees on emergency standby who are called back to perform emergency work shall be paid for all hours worked at 1.5 times their regular hourly rate of pay or equivalent compensatory time off (CTO) with a guaranteed minimum of two (2) hours; except on holidays the rate of 1.5 times the employee's regular hourly pay rate shall be paid in addition to the paid holiday.

2. Call Back Pay: Employees who are not on emergency standby but are called back to work outside their regularly scheduled work hours to perform approved work, shall be paid for all hours over forty (40) called back to work at 1.5 times their regular hourly rate of pay or equivalent CTO with a guaranteed minimum of two (2) hours. Employees who are called back on holidays shall receive call back pay in addition to holiday pay pursuant to Article VI paragraph C.

    a. Notwithstanding the above, Public Works Department employees receive 1.5 times their regular rate of pay for all hours worked during a call back relating to road emergencies with a two (2) hour minimum.

E. Overtime

1. Overtime for employees covered by this Agreement shall be as specified in Colusa County Personnel Rules 1.107.1 Sections "l" through "t", except as follows:

    a. Hours worked in excess of 40 hours per week shall be compensated at the employee's election either at the rate of 1.5 times the employee's regular hourly rate of pay or as compensatory time off ("CTO") calculated at the rate of 1.5 times the number of overtime hours worked provided:

    1) CTO hours may be accumulated to a maximum of 80 hours at any given time and may be taken, with the advance approval of the employee's supervisor, as paid time off during the same calendar year in which they are accumulated;

    2) CTO hours are paid at an employee's regular rate of pay at the time the CTO is paid out;

    3) All accumulated CTO hours will be utilized or cashed out no later than December 31 of each year; and

    4) All accumulated CTO hours will be cashed out upon separation from County employment.

F. Temporary Promotions (Temporary Upgrade Pay)

1. When a position becomes vacant and there is a need to fill the vacant position pending recruitment for a permanent appointment, the appointing authority may request the Human Resources Director to authorize a temporary promotion of a regular full or part-time employee from a, lower level job class that is directly related to the vacant position.

    For purposes of this section, "vacant position" does not refer to a position that is temporarily available due to an employee's leave of absence.

2. The temporarily promoted employee shall meet the minimum qualifications for the higher-level job class as determined by the Human Resources Director. Employees serving a temporary promotion may apply for regular promotion to fill the permanent vacancy.

3. Temporary promotions provided under this section are intended to comply with CA Government Code Section 20480 and described in CalPERS Circular Letter 200-021-18. Incumbents must be relieved of all duties of their former position in a temporary promotion. Temporary promotions must not exceed 960 hours in each fiscal year. The additional compensation paid to employees serving in a temporary promotion will be reported to CalPERS as temporary upgrade pay.

4. Any regular employee who is temporarily promoted under this section, will receive an increase in pay beginning with the first day of the temporary promotion. Increases in pay related to temporary promotion are calculated in the same manner as a regular promotion.

5. Upon termination of a temporary promotion, the temporarily promoted employee shall be restored to their prior permanent position as if the employee had never left. Employees who are temporarily promoted pursuant to this section and are also eligible for a merit increase in their permanent job classification shall be eligible for the merit increase while serving in the temporary promotion and their temporary promotional pay shall be adjusted to reflect the merit increase, if granted.

6. In the event a temporarily promoted employee receives a regular promotion to the vacant position without any lapse in time between the temporary promotion and the regular promotion, the employee's, time from the first day of temporary promotion shall count as service in the higher-level position for purposes of merit advancement in the higher salary range.

G. Out of Class Assignments:

An employee may be requested to perform an out of class assignment for a limited term. Employees assigned to perform clearly established duties of a higher-level position or classification shall receive out of class pay equal to 5% of their base pay for each day they perform the higher-level duties. Employees are not required to assume all duties of the higher-level position or classification to receive out of class pay. Out of class pay pursuant to this section is not reportable to CalPERS and is not considered as part of the CalPERS retirement benefit calculation.

H. Agricultural Equipment Operator Assignments

Employees within the Department of Agriculture who are routinely and consistently assigned to operate or drive specialized agricultural equipment or vehicles requiring a Class B driver's license, shall receive special assignment pay equal to 5% of their base pay for the working pay period the assignment was performed.

I. Inpatient Interventionist Assignments

Employees shall receive an enhanced standby incentive pay when voluntarily accepting a shift for Inpatient Interventionist.

Standby pay of $25 per 8-hour shift will be paid to employees within the Behavioral Health Department who are offered and accept, on a rotational basis, patient crisis sitter or patient driver shifts, which require these employees to be available outside their normal work hours on a standby basis for emergency work, whether or not called in to work. If called back to perform emergency work, employees shall be paid for all hours worked at 1.5 times their regular hourly rate of pay or equivalent compensatory time off (CTO) with a guaranteed minimum of two (2) hours, except on holidays, the rate of 1.5 times their regular hourly pay rate shall be paid in addition to the holiday.

Crisis Sitter shifts are available for the following BHS classification: therapists, mental health specialists, case managers, family specialists and peer specialists. Driver shifts are available for all permanent status BHS employees with a valid CA driver's license. No employee may accept shifts that will cause the employee to work a 7-day work week.

J. Compensation for Chaperones Working 24-Hour Schedule

This provision is to address compensation for employees serving as chaperones and working a 24-hour schedule. During each 24-hour workday, employees will be allowed a six (6) hour sleep period commencing at 11:30 PM and ending at 5:30 AM the following morning ("sleep time window"). If the employee receives at least five (5) consecutive hours of uninterrupted sleep during the sleep time window (defined as not performing the duties of a chaperone or performing other work-related business required by the County), the six (6) hour sleep time shall be excluded from hours worked during the 24-hour work day and the employee will be compensated for 18 hours of work.

If, however, the employee is required to perform the duties of a chaperone or other work-related business during the sleep time window period, all time spent performing such work shall be considered additional hours worked. In the event the employee cannot get at least five (5) hours of uninterrupted sleep during the sleep time window period, the entire six (6) hour sleep time shall be regarded as hours worked.

ARTICLE VI
HOLIDAYS

A. Holidays

1. Employees covered by this Agreement are entitled to the paid holidays listed below and specified in section 1.108.2(f) of the Colusa County Personnel Rules, which shall be considered to fall on the day-of-the-week designated as the day of celebration by the Board, unless they work in which case paragraph "D" below controls.

2. To take time off work for holidays or be compensated, the County recognizes the following holidays:

- January 1st, known as "New Year's Day."
- The third Monday in January, known as "Martin Luther King, Jr. Day."
- February 12th, known as "Lincoln Day."
- The third Monday in February, known as "Presidents' Day."
- March 31st, known as "Cesar Chavez Day."
- The last Monday in May, known as "Memorial Day."
- **June 19th, known as "Juneteenth"**
- July 4th, known as "Independence Day."
- The first Monday in September, known as "Labor Day."

- The second Monday in October, known as "Columbus Day."
- November 11th, known as "Veterans Day."
- The fourth Thursday of November, known as "Thanksgiving Day."
- The day after Thanksgiving.
- **December 24th, known as "Christmas Eve"**
- December 25th, known as "Christmas Day."
- Every day appointed by the President **(see Section C below)** or Governor as a day free of work including but not limited to a national day of mourning, thanksgiving, or other day no matter how designated of national or statewide significance unless otherwise decided by the Board.

a. If any of the holidays recognized by the county falls on a Saturday, the preceding Friday will be a holiday.

b. If any of the holidays falls on a Sunday, the following Monday will be a holiday.

B. Floating Holiday

1. Employees covered by this Agreement may each fiscal year select one floating holiday not identified above.

C. Newly Declared Federal Holidays

1. Effective October 1, 2025, the County will recognize newly declared single-occurrence federal observances, commemorative days, or national moments of remembrance that are not designated as recurring federal holidays established by an act of Congress or Presidential proclamation, provided the holiday is not designated as a permanent, recurring federal holiday observed, nationally. Permanent, recurring federal holidays must be bargained. The County will provide employees the day off with pay in observance of any such newly declared federal observances, under the following conditions:

    1. **Scope**: This provision applies only to federal holidays declared after September 30, 2025. It does not apply retroactively to holidays declared or observed prior to this date.
    2. **Holiday Scheduling**: The recognized single-occurrence federal observance, commemorative day, or national moment of remembrance that are not designated as recurring federal holidays will be observed in the same manner as other fixed-date or floating holidays already recognized by the County.
    3. **Board Approval**: In recognition that federally declared observances, commemorative days, or national moments of remembrance are frequently announced with minimal advance notice, such declarations shall be deemed to carry the implicit approval of the Board of Supervisors, and no additional Board action shall be required.

D. Holiday Compensation

1. Employees who work on any of the holidays listed above and specified in section 1.108.2(f) of the Colusa County Personnel Rules shall be paid as their full compensation for working on a holiday two (2) times their regular hourly rate for each hour worked with no additional pay for the holiday. This section does not apply to employees on standby who are called in to work in an emergency situation whose pay rate is governed by Article V Paragraph E of this Agreement.

2. If a holiday falls on a Saturday or Sunday and either day is part of an employee's scheduled workweek, the employee will receive his regular rate of pay and the day shall be counted as a regular workday.

3. If an employee resigns and the last day worked is the day before a holiday, the employee will not be paid for the holiday.

4. Temporary, extra help, limited term and seasonal employees required to work on a holiday shall be paid the regular rate of pay established for their positions.

5. If an employee is on a leave of absence without pay, the employee will not be paid for holidays except as required by law.

ARTICLE VII
LEAVES

A. Vacation

1. Employees covered by this Agreement are entitled to Vacation Leave with pay as provided in section 1.108.2(a) et seq. of the Colusa County Personnel Rules.

    1) The County vacation leave with pay plan functions under an accrual and usage plan (the plan). Under the plan, vacation will be earned and credited on a monthly-basis

    2) Employees are encouraged and expected to use all vacation in the year in which credited;

    3) Vacation shall be used in no less than fifteen-minute increments;
        a) Only accrued leave can be used. If there is no leave on the books, it cannot be used.

    4) Vacation must be scheduled in advance, subject to pre-approval by the employee's supervisor;

    5) Appointing authorities are charged with actively managing the vacation usage of their employees, to ensure vacation is used in accordance with this section;

    6) Vacation shall accrue on an hourly basis, based on an employee's anniversary date. An employee may accumulate a maximum of 1.5 times their annual accrual. An employee who accumulates vacation in excess of the maximum allowable hours will stop accruing vacation until their accumulated vacation hours fall below the maximum allowed.

    7) Vacation shall accrue and may be accumulated at the following rates:

Time in Service	Annual Vacation	Monthly Accrual 37.5-hour week	Monthly Accrual 40-hour week	Maximum Accumulation 37.5-hour week	Maximum Accumulation 40- hour week
0 through 3 yrs.	0 – 10 days	6.25 hours	6.666 hours	112.50 hours	120.00 hours
4 through 7 yrs.	15 days	9.375 hours	10.000 hours	168.75 hours	180.00 hours
8 through 11 yrs.	20 days	12.500 hours	13.333 hours	225.00 hours	240.00 hours
12+ yrs.	25 days	15.625 hours	16.666 hours	281.25 hours	300.00 hours

8) Vacation hours accumulated by an employee before January 1, 2009, will be carried forward in a separate employee vacation account, which may be referenced as the "pre-2009 vacation account," subject to the following:

a) Effective January 1, 2014, the value of each vacation hour included in an employee's pre-2009 vacation account will be calculated at the employee's current hourly rate of pay and will be frozen at that amount.

b) If, subsequent to January 1, 2014, an employee takes vacation-time off using vacation hours credited to the pre-2009 vacation account, they will be granted vacation time off on an hour-for-hour basis, without regard for their current rate of pay.

9) Legal holidays occurring during vacation leave will not be charged as vacation leave but as a holiday;

10) Employees may request conversion into cash payments of up to forty (40) hours of accrued vacation not more than once in a fiscal year. Employees may also elect such cash conversion to be deposited into a deferred compensation account in the employee's name. Employees must retain a minimum of forty (40) hours in their leave bank to make a conversion request.

11) Part-time employees shall accrue and may accumulate vacation leave on a pro-rata basis equal to their prorated service time and their prorated hours worked;

12) Upon termination, the employee or their estate will be paid the monetary value of the earned unused vacation in the employee's vacation account.

13) Starting from the first complete pay period after October 1, 2023, all employees will be able to include their previous public service experience for calculating vacation accrual. Verifiable experience is counted in complete years (equivalent to twelve [12] months). Each employee shall be credited for the purpose of accrual, with years of service at other public agencies on a year for year basis. The maximum vacation allowance will correspondingly align with the updated years of service for vacation.

B. Sick Leave

1. Employees covered by this Agreement are entitled to accrue, accumulate and use Sick Leave with pay as provided in section 1.108.2(b) et seq. of the Colusa County Personnel Rules except as follows:

a. Effective January 1, 2017, each County employee who separates from County service will be compensated for unused sick leave based on the formula specified in section 1.108.2(b) et seq. except that:

i. Employees who separate from County service for any reason with unused sick leave that was accrued and accumulated before December 31, 2009 may choose to receive the entire amount owed in cash pursuant to section 1.108.2(b)(6) et seq. or may

choose to have the entire amount owed deposited into a county offered IRC 457 Plan subject to the limitations of such Plan.

b. Effective January 1, 2017, employees who retire from County service with unused sick leave that was accrued and accumulated after December 31, 2009 will be compensated based on the formula and conditions which follow:

i. An employee who retires with at least 15 years of Colusa County service and a minimum combined (old bank plus new bank) sick leave balance of 200 hours at the time of retirement will receive an amount equal to twenty-five percent (25%) of his/her current base hourly salary for all qualified hours.

ii. An employee who retires with at least 20 years of Colusa County service and a minimum combined (old bank plus new bank) sick leave balance of 250 hours at the time of retirement will receive an amount equal to fifty percent (50%) of his/her current base hourly salary for all qualified hours.

iii. An employee who retires with at least 25 years of Colusa County service and a minimum combined (old bank plus new bank) sick leave balance of 300 hours at the time of retirement will receive an amount equal to seventy-five percent (75%) of his/her current base hourly salary for all qualified hours.

iv. An employee who retires with at least 30 years of Colusa County service and a minimum combined (old bank plus new bank) sick leave balance of 350 hours at the time of retirement will receive an amount equal to one hundred percent (100%) of his/her current base hourly salary for all qualified hours.

v. Employees who are compensated for unused sick leave pursuant to paragraphs b.i. through b.iv. above may have any amount owed deposited into a County offered IRC 457 Deferred Compensation Plan subject to the limitations of such plan and/or to have any amount owed deposited into the County-sponsored Health Reimbursement Arrangement subject to the limitations of the HRA plan document.

1. For the purposes of this benefit only, County employees who are elected to a County office will be compensated as though they had “retired” effective the date they assume the County elected office.

C. Bereavement Leave

1. Bereavement leave will be granted in the case of death in the immediate family of the employee or spouse, pursuant to Colusa County Personnel Rules 1.108.2(d).

D. Jury Duty or Court Witness

1. Employees who are required to serve on jury duty shall receive full pay, but shall remit to the County any compensation, except reimbursement for parking, meals, mileage or lodging which may be received for such service.

2. An employee who is required to appear as a witness in a court case which involves the County or County business shall receive full pay, but shall remit to the County any witness fees, including fees received as an expert witness, except reimbursement for parking, meals, mileage or lodging which may be received for such service.

E. Education Leave

1. Upon the recommendation of the department head, the Board of Supervisors may grant an employee up to nine (9) months of educational leave without pay. The department head shall consider the following criteria in making recommendation to the Board to grant educational leave: Whether

    a. Education or training will increase on-the-job skills; and

    b. Education or training will increase the employee's qualifications for promotion; and

    c. The employee indicates a desire to make County employment a career; and

    d. The employee has demonstrated high motivation for self-improvement; and

    e. The employee has shown indications of superior work performance in present position; and

    f. The employee has shown evidence of promotional potential indicating the capacity to perform in a more responsible position; and

    g. The employee has shown potential, motivation and suitability for further educational opportunity.

F. All Leaves Recognized By Law

As stated in Colusa County Personnel Rules section 1.108.2 employees covered by this Agreement may take any leave recognized by law.

1. Employees covered by this Agreement, solely at their option, may elect to retain up to forty (40) hours of accrued vacation leave while on a Medical and Family Leave lasting longer than three (3) days and be placed in leave without pay status prior to exhausting all accrued vacation leave. Unless the employee notifies the County of the election to retain vacation leave at the time of Medical and Family Leave, all paid leave will run concurrently for the entire Medical and Family Leave and must be exhausted prior to leave without pay. The County's Medical and Family Leave Policy (Policy #308) and §1.108 of the Colusa County Personnel Rules shall be interpreted and applied in a manner consistent with this provision.

ARTICLE VIII
HEALTH AND WELFARE

The County provides the health and welfare benefits identified in the Colusa County Personnel Rules to all bargaining unit employees subject to the terms which follow:

A. Medical Insurance

1. Except as provided in Section H, below the County will continue to contract with the Public Employees' Retirement System (CalPERS) for the purpose of providing medical insurance benefits for active employees in accordance with the Public Employees Medical and Hospital Care Act (PEMHCA) and eligible retired employees. Eligibility of active and retired employees and the dependents of active and retired employees to participate in this program shall be in accordance

with regulations promulgated by CalPERS.

2. Pursuant to Government Code Section 22892 (a) the County will contribute the statutory minimum employer contribution (MEC) on behalf of each active employee and each retiree who subscribes for coverage.

3. Except as provided herein, represented employees shall purchase medical insurance through the CalPERS Medical Program.

    a. Represented employees who have alternative medical insurance coverage from another source, which provides "Minimum Essential Coverage" as that term is defined by the agencies responsible for the administration of the Affordable Care Act, may, by providing written proof of such alternative coverage to the County, opt out of the CalPERS Medical Program. Employees who opt out of the CalPERS Medical Program shall be required to provide written confirmation of alternative Minimum Essential Coverage annually thereafter, during the CalPERS open enrollment period. If such confirmation is not provided, the employee shall be required to enroll in the CalPERS Medical Program.

B. Dental Insurance

1. The County will continue to make dental insurance available to active employees and their eligible dependents of active employees through the County sponsored dental plan(s). The County's contributions toward such dental insurance shall be capped at $45.00 per month.

2. Except as provided herein, represented employees shall be required to purchase dental insurance through the County sponsored plan. Represented employees who have dental insurance coverage from another source may, by providing written proof of such alternative coverage to the County, opt out of the dental plan. Employees who opt out of the dental plan shall be required to provide written confirmation of alternative coverage annually thereafter, during the dental plan open enrollment period. If such confirmation is not provided, the employee shall be required to enroll in the dental plan.

    a. Employees who were hired prior to January 1, 2013 and who opt out of the dental plan pursuant to Section B.2. above, shall be provided a $45.00 per month cash-in-lieu benefit which the employee may deposit into an appropriate account within the County Cafeteria Plan or may be taken as a cash payment that will be applied to the employee's monthly paycheck. Amounts taken as cash will be treated as taxable income.

C. Cafeteria Plan

1. The County provides a Cafeteria Plan available to all represented employees. At a minimum, the County Cafeteria Plan provides non-elective County contributions that may be used to pay all or a portion of the monthly premium for county-sponsored group health insurance, and the pre-tax payments of the employee share of county-sponsored group health insurance premiums. The County Cafeteria Plan also includes a Flexible Spending Account, a Health Reimbursement Account, and a Dependent Care Account into which employees may make pre-tax contributions through the execution of Salary Reduction Agreements. Participation in the County Cafeteria Plan

shall be pursuant to the terms, conditions and restrictions of the Plan Administrator and shall be subject to the terms that follow.

a. Effective December 1, 2025 and each December 1st thereafter, the County will make non-elective contributions into the Cafeteria Plan on behalf of each represented employee who is enrolled in the CalPERS medical plan pursuant to Section A.3., sufficient that when combined with the MEC totals the following:
   i. For employees who are enrolled in employee only coverage, the County will contribute a dollar amount sufficient that when combined with the MEC is the equivalent of the actual premium, for employee only coverage based upon CalPERS Gold plan.
   ii. For employees who are enrolled in employee plus one coverage, the County will contribute a dollar amount sufficient that when combined with the MEC is the equivalent of the actual premium, for employee plus one coverage based upon CalPERS Gold plan.
   iii. For employees who are enrolled in family coverage, the County will contribute a dollar amount sufficient that when combined with the MEC is the equivalent of the actual premium for family coverage based upon CalPERS Gold plan.

c. In the event an employee has excess County Cafeteria contributions (before or after AFLAC or Colonial), the dollar equivalent thereof shall be contributed to the employee's Health Reimbursement Account (HRA) to the extent allowable by law.

d. Upon expiration of the MOU, County contributions shall remain at the 2027 contribution rates until such time as an alternative agreement is reached or alternative terms are imposed following the exhaustion of impasse and fact-finding procedures, if applicable.

D. Medical In Lieu

1. Subject to Section D.2 below, employees who, pursuant to Section A.3 a, above elect not to receive County-sponsored CalPERS health benefits, the County will provide a monthly In-lieu benefit which the employee may deposit into an appropriate account within the County Cafeteria Plan or may be taken as a cash payment that will be applied to the employee's monthly paycheck. Amounts taken as cash will be treated as taxable income.

   a. Employees hired prior to January 1, 2013 and who qualify for the above-described In-lieu benefit shall receive $715 per month.

   b. Employees hired after December 31, 2012 and who qualify for the above-described In-lieu benefit shall receive $333 per month as of January 1, 2024 and $400 per month as of January 1, 2025.

E. Part Time Employees

1. Part time employees regularly scheduled to work twenty (20) or more, but fewer that thirty (30) hours a week will be eligible for the health, dental, vision and Cafeteria Plan benefits appropriate to their hire-date equal to the pro rata relationship between the hours regularly scheduled to work and full time. Benefits for employees who are regularly scheduled to work thirty (30) hours or more per week will not be prorated.

   a. Part time employees regularly scheduled to work twenty (20) hours or more but fewer than thirty (30) hours each week are not required to accept county-sponsored health benefits and are not eligible for cash-in-lieu benefits.

b. Part time employees regularly scheduled to work thirty (30) hours or more each week are subject to the provisions of Section A.3. above and may be eligible for cash-in-lieu benefits if they satisfy the requirements of Section A.3a.

F. Vision Care and Employee Assistance Plans

1. Vision insurance shall be provided in accordance with the Vision Plan and shall include at a minimum an annual examination and the replacement of lenses and frames every twelve (12) months. The County will contribute one-hundred percent (100%) of the monthly premium for employee-only coverage. Employees may enroll eligible family members at the employee's expense and subject to the rules of the insurance provider.

2. The County shall provide to each represented employee an Employee Assistance Plan that includes up to six (6) visits during each calendar year with a designated Health Care Provider. Such Employee Assistance shall be strictly confidential, and the employee need only show proof of employment with Colusa County to receive this benefit.

G. Health Reimbursement Arrangement

1. The County will make an IRS qualified Health Reimbursement Arrangement (HRA) available for eligible represented employees who retire from the County and enroll in the County-Sponsored Health Plan. Subject to the conditions described below, the County will make monthly contributions into the HRA on behalf of each eligible retiree.

   a. For retirees who were hired before January 1, 2013 and who retired prior to the execution of this MOU, the County will contribute $128.26 per month to the retirees HRA. This retiree HRA contribution is separate from and in addition to the PEMHCA Minimum Employer Contribution (MEC).

   b. For employees hired before January 1, 2013 and who retire following the execution of this MOU, the County will contribute $128.26 per month, less any future increases to the MEC, to the retirees HRA, so that the combination of the MEC and the retiree HRA contribution does not exceed $267.26 per month. This retiree HRA contribution is separate from the MEC.

   c. Employees hired after January 1, 2013 and who subsequently retire are not eligible for the $128.26 retiree HRA contribution provided herein. Such retirees receive only the MEC.

2. Effective October 1, 2025, the County will contribute $**75** per month into individual IRS qualified Health Reimbursement Arrangement (HRA) accounts for each active employee. This contribution is in addition to any excess cafeteria funds. Employees will be responsible for any administrative fees associated with their HRA account. Upon retirement the remaining balance of an active employee's HRA will be rolled into the employee's retiree HRA.

H. Employee Wellness Program

The County will reimburse employees covered by this Agreement for up to 15% of their monthly gym membership fee through the Trindel Insurance program. The County, through the Human Resources Department, will provide information to employees about this program.

I. Health Care Compliance

1. The Parties intend to comply with legislative and regulatory requirements for the provision of health care insurance and benefits. If, during the term of this MOU, it is determined that the County is out of compliance with any health care related mandate or mandates, the County will take the steps necessary to comply with the law.

2. Before taking action pursuant to paragraph 1 above, the County will notify the Association of the issue and the County's intended action. Time permitting and at the request of the Association, County representatives will meet with Association representatives before acting. If the actions deemed necessary to comply with the law impact employee benefits, the County and the Association will meet and confer regarding such impacts.

ARTICLE IX
RETIREMENT

A. Retirement Plans

1. CalPERS Retirement Benefits

a. The County's contract with CalPERS provides the following retirement benefits for bargaining unit employees. CalPERS determines an employee's membership category as classic or new.

1. Tier 1 – Retirement benefits for confidential "classic" members hired prior to December 31, 2012 shall receive the following CalPERS benefits.

- 3% @60 retirement formula
- Single highest year final compensation period
- Employee pays an 8% member contribution

2. Tier 2 – Retirement benefits for confidential "new" members hired on or after January 1, 2013 are as follows:

- 2% @ age 62 retirement formula
- Three-year average final compensation period
- Employee pays 50% of the normal cost as determined by CalPERS

b. To the extent allowable by CalPERS, the County will continue to provide the following optional retirement enhancements:

- Military Service Credit as Public Service for Miscellaneous and Safety employees pursuant to Government Code Section 21024.

- Pre-Retirement Option 2W Death Benefit pursuant to Government Code Section 21548.

c. Member's contribution toward retirement costs are paid subject to the provisions of section 414(h)(2) of the Internal Revenue Code.

2. Should the statutory minimum employee member contribution rates for the above retirement plans

be increased through State legislative or CalPERS administrative action during the term of this Agreement, either party may request to reopen this section to negotiate possible changes to the employee contribution rates specified in this MOU. Unless required by law, the employee contribution rates specified above will not change during the term of this MOU without mutual agreement of the parties.

B. Internal Revenue Code Section 457 Deferred Compensation Plans

1. The County will continue to make IRC section 457 deferred compensation plans (IRC 457 Plans) available to represented employees, subject to the terms and conditions of plan sponsors which, in some cases, may require minimum employee contributions. Employee participation in such plans is voluntary.

2. Except for the matching contributions provided below, the County shall not make contributions on behalf of represented employees. The County will match employee contributions to a county-offered IRC 457 Plan and effective October 1, 2025 contribute increased amounts as follows:

   a. For employees with up to seven (7) years of county service, $60.00 per month. To qualify for matching contributions, employees must contribute an amount equal to or greater than the plan minimum contribution.

   b. For employees with seven (7) to fifteen (15) years of county service up to $80.00 per month. To qualify for matching contributions, employees must contribute an amount equal to or greater than the plan minimum contribution.

   c. For employees with more than fifteen (15) years of county service up to $100.00 per month. To qualify for matching contributions, employees must contribute an amount equal to or greater than the plan minimum contribution.

3. Specific information regarding each of the available IRC 457 Plans may be obtained from the Human Resources Department.

ARTICLE X
MISCELLANEOUS

A. Personal Protective Equipment.

1. Employees may be required to wear personal protective equipment, including but not limited to prescription safety eyeglasses, which will be provided by the County at no cost to employees. If a Department Head determines that employees are required to wear safety footwear, the County will, on an annual basis, reimburse the employee for the cost of such footwear in annual reimbursements up to $200 for each 12-month period from July 1 to June 30; subject to the County' s claims procedures, with no benefit carry-over, and employees on any type of long-term leave of absence will be ineligible for reimbursement until they return to full duty status.

B. Required Licenses.

1. Employees are responsible for meeting the requirements and for paying any fees involved in obtaining necessary licenses, certificates, permits, and registrations. However, where such licenses, certificates, permits, and registrations are required in order for the employee to maintain his/her current position, reimbursement may be sought from his/her employer upon proof of successful completion of tests or other requirements. Department heads are

responsible for informing their employees that their duties require them to obtain such licenses, etc., and for seeing that their employees obtain the licenses. Department heads should make available relevant information regarding applications, fees, and qualifications for licenses required by positions within their department.

C. Layoffs.

1. Layoffs in non-general fund Departments shall be contained within those Departments with no right for laid off employees to bump outside the Departments.

ARTICLE XI
SAVINGS

If any provision of this Agreement should be held invalid by operation of law or by tribunal of competent jurisdiction, or if compliance with or enforcement of such provision shall be restrained by such tribunal, the remainder of the Agreement shall remain in full force and effect.

ARTICLE XII
PERSONNEL RULES

Upon implementation of this Agreement, any terms and conditions of employment not specifically discussed herein shall be governed by the provisions of the Colusa County Personnel Rules.

ARTICLE XIII
FULL UNDERSTANDING

This Agreement constitutes the full understanding of the parties with respect to the matters set forth herein. The parties further agree that any amendment to this Agreement during the term of the Agreement must be reduced to writing and may be done only by mutual consent of the parties.

ARTICLE XIV
TERM

This Agreement shall remain in full force and effect from October 1, 2025, through and including September 30, 2027 provided that the County and/or the CCEA shall have the right to reopen negotiations limited to discussions regarding salary increases and lump sum payments, only, no later than September 1, 2026.

Dated: _____
Colusa County Employee Association

_____
Ann Nordyke
President

Dated: _____
County of Colusa

_____
Daurice Kalfsbeek-Smith
Chair of the Board

ATTEST: Marcos Kropf, Interim Clerk to the Board of Supervisors

Patricia Rodriguez, Deputy Clerk

Madison Williams
CCEA Chief Negotiator

Dar Rhodes
HR Director / County Chief Negotiator

MEMORANDUM OF UNDERSTANDING

Between

THE COUNTY OF COLUSA

And

THE COLUSA COUNTY EMPLOYEES' ASSOCIATION
(Miscellaneous Bargaining Unit)

DRAFT

TERM
October 1, 2025 – September 30, 2027

TABLE OF CONTENTS

PREAMBLE 4

ARTICLE I – RECOGNITION 4

ARTICLE II – CCEA RIGHTS

A. CCEA Rights 4
B. Fair Share Agreement 4
C. Public Employee Communication 5
D. Attendance at Board of Supervisors' Meetings 6
E. Association Leave Bank 6

ARTICLE III – MANAGEMENT RIGHTS 7

ARTICLE IV – GENERAL PROVISIONS

A. Strikes and Lockouts 7
B. No Reprisals 7

ARTICLE V – SALARIES

A. Salaries 7
B. Night Differential Pay 8
C. Bilingual Pay 8
D. Emergency Standby Pay and Call Back Pay 8
E. Overtime 9
F. Temporary Promotions (Temporary Upgrade Pay) 9
G. Out of Class Assignments 10
H. Agricultural Equipment Operator Assignments 10
I. Inpatient Interventionist Assignments 10
J. Migrant Center's Caretaker Assignments 11
K. Compensation for Chaperones Working 24-Hour Schedule 11

ARTICLE VI – HOLIDAYS

A. Holidays 12
B. Floating Holiday 13
C. Newly Declared Federal Holidays 13
D. Holiday Compensation 13

ARTICLE VII – LEAVES

A. Vacation 14
B. Sick Leave 15
C. Bereavement Leave 16
D. Jury Duty or Court Witness 16
E. Education Leave 16
F. All Leaves Recognized by Law 16

DRAFT

TABLE OF CONTENTS (*Continued*)

ARTICLE VIII – HEALTH AND WELFARE

A. Medical Insurance 17
B. Dental Insurance 17
C. Cafeteria Plan 18
D. Medical-In-Lieu 18
E. Part Time Employees 19
F. Vision Care and Employee Assistance Programs 19
G. Health Reimbursement Arrangement 19
H. Employee Wellness Program 20
I. Health Care Compliance 20

ARTICLE IX – RETIREMENT

A. Retirement Plan 20
1. CalPERS Retirement Benefits 20
2. Retirement Contributions 21
B. Internal Revenue Code Section 457 Deferred Compensation Plans 21

ARTICLE X – MISCELLANEOUS

A. Personal Protective Equipment 22
B. Required Licenses 22
C. Layoffs 22

ARTICLE XI – SAVINGS 22

ARTICLE XII – PERSONNEL RULES 23

ARTICLE XIII – FULL UNDERSTANDING 23

ARTICLE XIV – TERM 23

SIGNATURES 23

DRAFT

PREAMBLE

This Memorandum of Understanding ("MOU" or "Agreement") is entered into by and between the County of Colusa ("County") and the Colusa County Employees Association ("CCEA" or "Association") and sets forth the wages, benefits, hours of work, and other terms and conditions of employment for County employees assigned to the Miscellaneous Bargaining Unit.

ARTICLE I
RECOGNITION

Pursuant to Government Code Section 3500, et seq. and applicable provisions of the Colusa County Personnel Rules, the County recognizes the CCEA as the exclusive representative for all County employees assigned to the Miscellaneous Bargaining Unit.

ARTICLE II
CCEA RIGHTS

A. CCEA Rights

1. CCEA shall have all rights and privileges provided by the United States Constitution, the California State Constitution, Federal law, California State law, and the Colusa County Personnel Rules.

B. Dues Deduction

1. The County shall deduct CCEA membership dues and any other agreed-upon payroll deductions to the extent permitted by law from the monthly pay of each bargaining unit employee in accordance with the procedures set forth herein.

    a. Dues paying bargaining unit employees who have affirmatively consented to or authorized dues deductions shall be entitled to have dues deducted upon signing and filing with CCEA an authorization form provided by Association. CCEA will notify the County of the employee's name and the amount of dues to be withheld. The dues deduction form currently in use may continue to be utilized by CCEA.

    b. The County agrees to direct each bargaining unit employee to CCEA in response to any questions or concerns about dues or any other mutually agreed payroll deduction.

    c. CCEA is responsible for providing the County with timely information about changes to employee dues and any other lawful CCEA-related payroll deductions.

    d. Dues withheld by the County shall be transmitted monthly to the CCEA officer designated in writing by the Association as the person authorized to receive the funds at the address specified.

    e. A bargaining unit employee's earnings must be regularly sufficient after other legal and required deductions are made to cover the amount of the authorized CCEA dues deductions. If a bargaining unit employee is in a non-pay status during only part of the pay period and the salary is not sufficient to cover the full withholding, no deduction shall be made.

f. CCEA shall refund to the County any amounts paid to it in error upon presentation of supporting evidence. The County will deduct and remit to CCEA any amounts which were not deducted in accordance with the procedures prescribed herein.

2. The County shall make payroll deductions in reliance on CCEA's certification that the Association has and will maintain an authorization signed by each employee who affirmatively consents to pay CCEA membership dues. Similarly, the County shall only cancel or modify membership dues or any other mutually agreed payroll deduction for any bargaining unit employee in reliance on information provided by CCEA to the extent permitted by law.

3. The County shall not request that CCEA provide a copy of any bargaining unit employee's authorization unless a dispute arises about the existence or terms of the authorization.

4. CCEA shall indemnify, defend, protect and hold harmless the County and its elected and appointed officials, officers, employees, officers and agents from and against any and all claims, liabilities, losses, damages, fines, penalties, claims, demands, suits, actions, causes of action, judgments, costs and expenses arising from the application of this section, including, but not limited to, any claims made by bargaining unit employees for the return of membership dues deducted by the County in reliance on CCEA's certification, and any claims made by any bargaining unit employees for any deduction cancellation or modification the County made in reliance on the information provided by CCEA.

C. Public Employee Communication

1. This provision applies to all new employees hired into CCEA bargaining unit positions and is intended to comply with the provisions of Government Code, sections 3555 et seq.

   a. The County will provide CCEA with not less than ten (10) calendar days' advance written notice of the time, date and location of all new employee orientation meetings, unless an urgent and unforeseeable need for a new employee orientation meeting precludes the County from providing CCEA with ten (10) calendar days' advance notice. The advance notice will include the number of CCEA bargaining unit employees attending the orientation meetings. Notice will be made by way of email to the CCEA President or another contact person designated by CCEA.

   b. Upon request, CCEA will be given up to ten (10) minutes as part of the new employee orientation meetings to present information to bargaining unit employees generally relating to CCEA's role as representative, CCEA membership information, the rights and obligations created by the MOU and County personnel rules, and to answer questions. One (1) CCEA representative may present information to the new employees. Management representative shall excuse themselves and not be present during CCEA's portion of the new employee orientation meetings.

   c. The CCEA representative who present information at the new employee orientation meetings may do so while on duty without the loss of compensation, provided CCEA advises the Human Resources Director of the names of the employees who will be presenting information on behalf of CCEA at the new employee orientation meetings.

   d. The County shall not disclose the date/time/place of the new employee orientation to anyone other than the new employees and their departments, CCEA, and any vendors who are contracted to provide a service at the new employee orientation.

2. Information Requirements – The County will provide CCEA with a digital file via email to the email address designated by CCEA containing the following information for each employee to the extent the County has the information on file:

   - Name
   - Job title
   - Work location
   - Personal telephone number (may be home or cellular as provided by employee)
   - Home address
   - Personal email addresses if provided by the employee and on file with the County (new hires only) unless the employee submits a written request to the County and CCEA to withhold disclosure of his/her personal email address

   The above information will be provided on a monthly basis, except that the County is not required to provide personal telephone numbers, home addresses or personal email addresses unless requested by CCEA.

D. Attendance at Board of Supervisors' Meetings

1. A maximum of two (2) CCEA representatives may simultaneously attend any and all Board of Supervisors meetings on County time including budget hearings. The names of CCEA representatives who are authorized to attend Board of Supervisors meetings on County time must be provided to the Human Resources Director on or before July 1 of each year. Any combination of two (2) authorized CCEA representatives may attend the meetings at any given time.

E. Association Leave Bank

1. Commencing on October 1, 2025, and each October 1 thereafter, the County shall contribute twenty-four (24) hours per contract year to a CCEA Association Leave Bank to be used by designated CCEA representatives to conduct representational duties on behalf of bargaining unit members, excluding activities directly related to negotiations. Designated CCEA representatives who utilize Association Leave Bank hours shall not suffer a loss of compensation or other benefits. Unused hours shall not roll over from year to year and have no cash-out value.
2. **Request and Notification:** Union Representatives shall request Association Leave Bank time from their immediate supervisor in advance whenever possible, with a courtesy copy to the HR Director. Requests shall state the date and anticipated start/end time and note "Union representational duties." No employee names or confidential details are required.
3. **Tracking:** The HR Department shall track Association Leave Bank usage and provide quarterly usage reports to the Union upon request.
4. **Designated Representatives:** The Union shall annually provide the County with a list of designated representatives authorized to use Association Leave Bank time. Only those listed may access the Bank.
5. **Additional Time:** Any time used beyond the annual allotment shall be unpaid unless otherwise approved in writing by the County.

DRAFT

ARTICLE III
MANAGEMENT RIGHTS

Except as specifically limited by the terms of this MOU, the County, through its Board of Supervisors, shall have all management rights provided by the United States Constitution, the California State Constitution, California State Law, and Colusa County Personnel Rules.

ARTICLE IV
GENERAL PROVISIONS

A. Strikes and Lockouts

1. The CCEA agrees that during the term of this Agreement, neither it nor its officers, agents or members will engage in, encourage, sanction, support or suggest any strikes, work stoppages, slowdowns, or any other similar actions which would involve suspension of, or interference with, the normal work of the County.

2. The County will not lockout employees during the term of this Agreement.

B. No Reprisals

1. The County shall not interfere with or discriminate against any employee by reason of his or her membership in the CCEA or activity approved by this Agreement, nor will the County discourage membership in the CCEA or encourage membership in any other employee organization.

2. The CCEA recognizes its responsibility as the exclusive representative and agrees to represent all employees without discrimination, interference, restraint or coercion.

ARTICLE V
SALARIES

A. Salaries

1. **One-time Lump Sum Payment**: In lieu of a Cost-of-Living (COLA) adjustment in 2025 and 2026, members shall receive the following one-time lump sum payment to be issued no later than 30 days from the acceptance of the negotiated package:
   - Employees with at least 12 months of service with the County shall receive a lump sum payment of $1,500.
   - Employees with less than one year of service with the County shall receive a lump sum payment of $750.

   The parties agree that these are one-time payments which do not meet the definition of compensation earnable nor does it qualify as any applicable special compensation for CalPERS reporting purposes. The County will issue this payment as a separate check from normal wages.

2. **Re-Opener Clause**: The County and CCEA shall agree to reopen negotiations limited to discussions regarding salary increases and lump sum payments only no later than September 1, 2026.

DRAFT

3. **Me-too Clause**: If during the term of this Memorandum of Understanding, the County grants any across-the-board or other uniform wage/salary increase (excluding regularly scheduled step increases, pre-existing contractually mandated increases, or any other legally mandated salary increase) to any employee or defined class of employees, including but not limited to employees of all recognized bargaining units, the County will grant the same wage/salary increase for all represented employees covered by this MOU on the same date, unless the wage/salary increase was granted in exchange for a reduction to a current benefit. For purposes of this provision, an across the board or uniform wage/salary increases includes any increases granted as percentages of existing wages/salaries, fixed dollar amounts, formula-based increase and tiered increases within identifiable employee classifications and groups, but excludes reclassifications and salary range adjustments for individual classifications.

B. Night Differential Pay

1. For employees covered by this Agreement, Night Differential Pay, which may be provided pursuant to Personnel Rule 1.107.1(k), is $1.50 per hour provided that employees called into work shall not be eligible for night differential pay.

Per Personnel Rule 1.107.1(k) Any County employee who performs the majority of his/her regular shift between the hours of four p.m. and eight a.m. (including but not limited to peace officers at the Sheriff's Department, road department equipment service workers, custodians, and library staff) shall receive additional compensation per shift.

C. Bilingual Pay

1. Bilingual Pay shall be paid to those qualified employees in positions where the County receives a benefit from the employee's ability in the second language. Effective December 1, 2025, qualified employees will receive bilingual pay based on their level of proficiency. Level I (speaking only) will be eligible for $80 per month and Level II (speaking, reading & writing) will be eligible for $100 per month.

2. The determination of County benefit shall be based on the Department Head's recommendation and approval of the Human Resources Director provided that such approval shall not be unreasonably withheld. Qualification shall be based on passing an approved language proficiency test modeled on the CHP proficiency test ("Test") and demonstrated proficiency in speaking, understanding, writing and reading the language.

Employees currently receiving bilingual pay will be placed in a tier based on current test scores. If the original test is not available, an assessment will need to be completed; the employee will remain at Level I until the assessment takes place. For employees whose assessment cannot be completed by December 1, 2025, any resulting adjustment in pay will be retroactive to December 1, 2025 for those employees only.

D. Emergency Standby Pay and Call Back Pay

3. Emergency Standby Pay of $25.00 per day shall be paid to employees required to be available outside their normal work hours on a standby basis for "emergency work" whether or not called

back to work. For purposes of this section, emergency work is work that must be performed in response to an unforeseen sudden event which requires immediate response to prevent, mitigate or eliminate a substantial hazard to life, health, or property.

Employees on emergency standby who are called back to perform emergency work shall be paid for all hours worked at 1.5 times their regular hourly rate of pay or equivalent compensatory time off (CTO) with a guaranteed minimum of two (2) hours; except on holidays the rate of 1.5 times the employee's regular hourly pay rate shall be paid in addition to the paid holiday.

4. Call Back Pay: Employees who are not on emergency standby but are called back to work outside their regularly scheduled work hours to perform approved work, shall be paid for all hours over forty (40) called back to work at 1.5 times their regular hourly rate of pay or equivalent CTO with a guaranteed minimum of two (2) hours. Employees who are called back on holidays shall receive call back pay in addition to holiday pay pursuant to Article VI paragraph C.

   a. Notwithstanding the above, Public Works Department employees receive 1.5 times their regular rate of pay for all hours worked during a call back relating to road emergencies with a two (2) hour minimum.

E. Overtime

1. Overtime for employees covered by this Agreement shall be as specified in Colusa County Personnel Rules 1.107.1 Sections "l" through "t", except as follows:

   a. Hours worked in excess of 40 hours per week shall be compensated at the employee's election either at the rate of 1.5 times the employee's regular hourly rate of pay or as compensatory time off ("CTO") calculated at the rate of 1.5 times the number of overtime hours worked provided:

      1) CTO hours may be accumulated to a maximum of 80 hours at any given time and may be taken, with the advance approval of the employee's supervisor, as paid time off during the same calendar year in which they are accumulated;

      2) CTO hours are paid at an employee's regular rate of pay at the time the CTO is paid out;

      3) All accumulated CTO hours will be utilized or cashed out no later than December 31 of each year; and

      4) All accumulated CTO hours will be cashed out upon separation from County employment.

F. Temporary Promotions (Temporary Upgrade Pay)

1. When a position becomes vacant and there is a need to fill the vacant position pending recruitment for a permanent appointment, the appointing authority may request the Human Resources Director authorize a temporary promotion of a regular full or part-time employee from a lower level job class that is directly related to the vacant position.

   For purposes of this section, "vacant position" does not refer to a position that is temporarily available due to an employee's leave of absence.

DRAFT

2. The temporarily promoted employee shall meet the minimum qualifications for the higher-level job class as determined by the Human Resources Director. Employees serving a temporary promotion may apply for regular promotion to fill the permanent vacancy.

3. Temporary promotions provided under this section will comply with California Government Code section 20480, described in CalPERS Circular Letter 200-021-18. Incumbents must be relieved of all duties of their former position in a temporary promotion. Temporary promotions must not exceed 960 hours in each fiscal year. The additional compensation paid to employees serving in a temporary promotion will be reported to CalPERS as temporary upgrade pay.

4. Any regular employee who is temporarily promoted under this section, will receive an increase in pay beginning with the first day of the temporary promotion. Increases in pay related to temporary promotion are calculated in the same manner as a regular promotion.

5. Upon termination of a temporary promotion, the temporarily promoted employee shall be restored to their prior permanent position as if the employee had never left. Employees who are temporarily promoted pursuant to this section and are also eligible for a merit increase in their permanent job classification shall be eligible for the merit increase while serving in the temporary promotion and their temporary promotional pay shall be adjusted to reflect the merit increase, if granted.

6. In the event a temporarily promoted employee receives a regular promotion to the vacant position without any lapse in time between the temporary promotion and the regular promotion, the employee's, time from the first day of temporary promotion shall count as service in the higher-level position for purposes of merit advancement in the higher salary range.

G. Out of Class Assignments

An employee may be requested to perform an out of class assignment for a limited duration. Employees assigned to perform clearly established duties of a higher-level position or classification shall receive out of class pay equal to 5% of their base pay for each day they perform the higher-level duties. Employees are not required to assume all duties of the higher-level position or classification to receive out of class pay. Out of class pay pursuant to this section is not reportable to CalPERS and is not considered as part of the CalPERS retirement benefit calculation.

H. Agricultural Equipment Operator Assignments

Employees within the Department of Agriculture who are routinely and consistently assigned to operate or drive specialized agricultural equipment or vehicles requiring a Class B driver's license, shall receive special assignment pay equal to 5% of their base pay for the working pay period the assignment was performed.

I. Inpatient Interventionist Assignments

Employees shall receive an enhanced standby incentive pay when voluntarily accepting a shift for Inpatient Interventionist.

Standby pay of $25 per 8-hour shift will be paid to employees within the Behavioral Health Department who are offered and accept, on a rotational basis, patient crisis sitter or patient driver shifts, which require these employees to be available outside their normal work hours on a standby basis for emergency work, whether or not called in to work. If called back to perform emergency work, employees shall be paid for all hours worked at 1.5 times their regular hourly rate of pay or

equivalent compensatory time off (CTO) with a guaranteed minimum of two (2) hours, except on holidays, the rate of 1.5 times their regular hourly pay rate shall be paid in addition to the holiday.

Crisis Sitter shifts are available for the following BHS classification: therapists, mental health specialists, case managers, family specialists and peer specialists. Driver shifts are available for all permanent status BHS employees with a valid CA driver's license. No employee may accept shifts that will cause the employee to work a 7-day work week.

J. Migrant Center's Caretaker Assignments

Employees in the classification of Migrant Center Caretaker I/II are required as a condition of employment to live onsite in County provided housing as their permanent year-round residence in order to perform the duties of their position. Therefore, the Parties agree as follows:

The County, solely for its convenience, shall provide housing to employees within the Department of Agriculture, Migrant Center, assigned to the position of Caretaker I/II The value of such housing shall have no impact on the employee's compensation and shall be excluded from gross income consistent with IRS regulation section 1.119-I(b).

Specifics regarding housing are:

1) The County will provide rent-free housing with power, gas, garbage and water included.
2) Management will perform annual inspections on the interior and exterior of houses.
3) Caretakers must follow the same rules as the residents including, no pets, no public drinking, and no vending.
4) Caretakers agree to vacate the house within 30 days of the last day of employment with the County.
5) No permanent changes (remodeling) can be made to the house.
6) All repairs must be reported and approved by management.
7) No permanent structures may be built on the exterior of the house or in the yard.
8) Each Caretaker residence will have two (2) reserved parking spots nearest to their house.
9) Caretakers are not allowed to rent out rooms in their houses.

K. Compensation for Chaperones Working 24-Hour Schedule

This provision is to address compensation for employees serving as chaperones and working a 24-hour schedule. During each 24-hour workday, employees will be allowed a six (6) hour sleep period commencing at 11:30 PM and ending at 5:30 AM the following morning ("sleep time window"). If the employee receives at least five (5) consecutive hours of uninterrupted sleep during the sleep time window (defined as not performing the duties of a chaperone or performing other work-related business required by the County), the six (6) hour sleep time shall be excluded from hours worked during the 24-hour work day and the employee will be compensated for 18 hours of work.

If, however, the employee is required to perform the duties of a chaperone or other work-related business during the sleep time window period, all time spent performing such work shall be considered additional hours worked. In the event the employee cannot get at least five (5) hours of uninterrupted sleep during the sleep time window period, the entire six (6) hour sleep time shall be regarded as hours worked.

DRAFT

ARTICLE VI
HOLIDAYS

A. Holidays

1. Employees covered by this Agreement are entitled to the paid holidays listed below and specified in section 1.108.2(f) of the Colusa County Personnel Rules, which shall be considered to fall on the day-of-the-week designated as the day of celebration by the Board, unless they work in which case paragraph "D" below controls.

2. To take time off work for holidays or be compensated, the County recognizes the following holidays:

   - January 1st, known as "New Year's Day."
   - The third Monday in January, known as "Martin Luther King, Jr. Day."
   - February 12th, known as "Lincoln Day."
   - The third Monday in February, known as "Presidents' Day."
   - March 31st, known as "Cesar Chavez Day."
   - The last Monday in May, known as "Memorial Day."
   - **June 19th, known as "Juneteenth"**
   - July 4th, known as "Independence Day."
   - The first Monday in September, known as "Labor Day."
   - The second Monday in October, known as "Columbus Day."
   - November 11th, known as "Veterans Day."
   - The fourth Thursday of November, known as "Thanksgiving Day."
   - The day after Thanksgiving.
   - **December 24th, known as "Christmas Eve."**
   - December 25th, known as "Christmas Day."
   - Every day appointed by the President **(see Section C below)** or Governor as a day free of work including but not limited to a national day of mourning, thanksgiving, or other day no matter how designated of national or statewide significance unless otherwise decided by the Board.

   a. If any of the holidays recognized by the county falls on a Saturday, the preceding Friday will be a holiday.

   b. If any of the holidays falls on a Sunday, the following Monday will be a holiday.

DRAFT

B. Floating Holiday

1. Employees covered by this Agreement may each fiscal year select one floating holiday not identified above.

C. Newly Declared Federal Holidays

1. Effective October 1, 2025, the County will recognize newly declared single-occurrence federal observances, commemorative days, or national moments of remembrance that are not designated as recurring federal holidays established by an act of Congress or Presidential proclamation, provided the holiday is not designated as a permanent, recurring federal holiday observed, nationally. Permanent, recurring federal holidays must be bargained.

   The County will provide employees the day off with pay in observance of any such newly declared federal observances, under the following conditions:

   1. **Scope**: This provision applies only to federal holidays declared after September 30, 2025. It does not apply retroactively to holidays declared or observed prior to this date.
   2. **Holiday Scheduling**: The recognized single-occurrence federal observance, commemorative day, or national moment of remembrance that are not designated as recurring federal holidays will be observed in the same manner as other fixed-date or floating holidays already recognized by the County.
   3. **Board Approval**: In recognition that federally declared observances, commemorative days, or national moments of remembrance are frequently announced with minimal advance notice, such declarations shall be deemed to carry the implicit approval of the Board of Supervisors, and no additional Board action shall be required.

D. Holiday Compensation

1. Employees who work on any of the holidays listed above and specified in section 1.108.2(f)of the Colusa County Personnel Rules shall be paid as their full compensation for working on a holiday two (2) times their regular hourly rate for each hour worked with no additional pay for the holiday. This section does not apply to employees on standby who are called in to work in an emergency situation whose pay rate is governed by Article V Paragraph E of this Agreement.

2. If a holiday falls on a Saturday or Sunday and either day is part of an employee's scheduled workweek, the employee will receive his regular rate of pay and the day shall be counted as a regular workday.

3. If an employee resigns and the last day worked is the day before a holiday, the employee will not be paid for the holiday.

4. Temporary, extra help, limited term and seasonal employees required to work on a holiday shall be paid the regular rate of pay established for their positions.

5. If an employee is on a leave of absence without pay, the employee will not be paid for holidays except as required by law.

ARTICLE VII
LEAVES

A. Vacation

DRAFT

1. Employees covered by this Agreement are entitled to Vacation Leave with pay as provided in section 1.108.2(a) et seq. of the Colusa County Personnel Rules.

   1) The County vacation leave with pay plan functions under an accrual and usage plan (the plan). Under the plan, vacation will be earned and credited on a monthly-basis

   2) Employees are encouraged and expected to use all vacation in the year in which credited;

   3) Vacation shall be used in no less than fifteen-minute increments;

      a) Only accrued leave can be used. If there is no leave on the books, it cannot be used.

   4) Vacation must be scheduled in advance, subject to pre-approval by the employee's supervisor;

   5) Appointing authorities are charged with actively managing the vacation usage of their employees, to ensure vacation is used in accordance with this section;

   6) Vacation shall accrue on an hourly basis, based on an employee's anniversary date. An employee may accumulate a maximum of 1.5 times their annual accrual. An employee who accumulates vacation in excess of the maximum allowable hours will stop accruing vacation until their accumulated vacation hours fall below the maximum allowed.

   7) Vacation shall accrue and may be accumulated at the following rates:

Time in Service	Annual Vacation	Monthly Accrual 37.5-hour week	Monthly Accrual 40-hour week	Maximum Accumulation 37.5-hour week	Maximum Accumulation 40-hour week
0 through 3 yrs.	0 – 10 days	6.25 hours	6.666 hours	112.50 hours	120.00 hours
4 through 7 yrs.	15 days	9.375 hours	10.000 hours	168.75 hours	180.00 hours
8 through 11 yrs.	20 days	12.500 hours	13.333 hours	225.00 hours	240.00 hours
12+ yrs.	25 days	15.625 hours	16.666 hours	281.25 hours	300.00 hours

   8) Vacation hours accumulated by an employee before January 1, 2009, will be carried forward in a separate employee vacation account, which may be referenced as the "pre-2009 vacation account," subject to the following:

      a) Effective January 1, 2014, the value of each vacation hour included in an employee's pre-2009 vacation account will be calculated at the employee's current hourly rate of pay and will be frozen at that amount.

      b) If, subsequent to January 1, 2014, an employee takes vacation-time off using vacation hours credited to the pre-2009 vacation account, they will be granted vacation time off on an hour-for-hour basis, without regard for their current rate of pay.

   9) Legal holidays occurring during vacation leave will not be charged as vacation leave but as a holiday;

   10) Employees may request conversion into cash payments of up to forty (40) hours of accrued vacation not more than once in a fiscal year. Employees may also elect such cash conversion to be deposited into a deferred compensation account in the employee's name. Employees must retain a minimum of forty (40) hours in their leave bank to make a conversion request.

   11) Part-time employees shall accrue and may accumulate vacation leave on a pro-rata basis equal to their prorated service time and their prorated hours worked;

12) Upon termination, the employee or their estate will be paid the monetary value of the earned unused vacation in the employee's vacation account.

13) Starting from the first complete pay period after October 1, 2023, all employees will be able to include their previous public service experience for calculating vacation accrual. Verifiable experience is counted in complete years (equivalent to twelve [12] months). Each employee shall be credited for the purpose of accrual, with years of service at other public agencies on a year for year basis. The maximum vacation allowance will correspondingly align with the updated years of service for vacation.

B. Sick Leave

1. Employees covered by this Agreement are entitled to accrue, accumulate and use Sick Leave with pay as provided in section 1.108.2(b)et seq. of the Colusa County Personnel Rules except as follows:
   a. Effective January 1, 2017, each County employee who separates from County service will be compensated for unused sick leave based on the formula specified in section 1.108.2(b), subsection 6 et seq. except that:

      i. Employees who separate from County service for any reason with unused sick leave that was accrued and accumulated before December 31, 2009 may choose to receive the entire amount owed in cash pursuant to §1.108.2(b)(6) et seq. or may choose to have the entire amount owed deposited into a county offered IRC 457 Plan subject to the limitations of such Plan.

   b. Effective January 1, 2017, employees who retire from County service with unused sick leave that was accrued and accumulated after December 31, 2009 will be compensated based on the formula and conditions which follow:

      i. An employee who retires with at least 15 years of Colusa County service and a minimum combined (old bank plus new bank) sick leave balance of 200 hours at the time of retirement will receive an amount equal to twenty-five percent (25%) of his/her current base hourly salary for all qualified hours.

      ii. An employee who retires with at least 20 years of Colusa County service and a minimum combined (old bank plus new bank) sick leave balance of 250 hours at the time of retirement will receive an amount equal to fifty percent (50%) of his/her current base hourly salary for all qualified hours.

      iii. An employee who retires with at least 25 years of Colusa County service and a minimum combined (old bank plus new bank) sick leave balance of 300 hours at the time of retirement will receive an amount equal to seventy-five percent (75%) of his/her current base hourly salary for all qualified hours.

      iv. An employee who retires with at least 30 years of Colusa County service and a minimum combined (old bank plus new bank) sick leave balance of 350 hours at the time of retirement will receive an amount equal to one hundred percent (100%) of his/her current base hourly salary for all qualified hours.

      v. Employees who are compensated for unused sick leave pursuant to paragraphs b-i through b-iv above may have any amount owed deposited into a County offered IRC 457 Deferred Compensation Plan subject to the limitations of such plan and/or to have any amount owed

deposited into the County-sponsored Health Reimbursement Arrangement subject to the limitations of the HRA plan document.

1. For the purposes of this benefit only, County employees who are elected to a County office will be compensated as though they had "retired" effective the date they assume the County elected office.

C. Bereavement Leave

1. Bereavement leave will be granted in the case of death in the immediate family of the employee or spouse pursuant to Colusa County Personnel Rules 1.108.2(d).

D. Jury Duty or Court Witness

1. Employees who are required to serve on jury duty shall receive full pay, but shall remit to the County any compensation, except reimbursement for parking, meals, mileage or lodging which may be received for such service.
2. An employee who is required to appear as a witness in a court case which involves the County or County business shall receive full pay, but shall remit to the County any witness fees, including fees received as an expert witness, except reimbursement for parking, meals, mileage or lodging which may be received for such service.

E. Education Leave

1. Upon the recommendation of the department head, the Board of Supervisors may grant an employee up to nine (9) months of educational leave without pay. The department head shall consider the following criteria in making recommendation to the Board to grant educational leave: Whether

a. Education or training will increase on-the-job skills; and

b. Education or training will increase the employee's qualifications for promotion; and

c. The employee indicates a desire to make County employment a career; and

d. The employee has demonstrated high motivation for self-improvement; and

e. The employee has shown indications of superior work performance in present position; and

f. The employee has shown evidence of promotional potential indicating the capacity to perform in a more responsible position; and

g. The employee has shown potential, motivation and suitability for further educational opportunity.

F. All Leaves Recognized By Law

Employees covered by this Agreement may take any leave recognized by law.

1. Employees covered by this Agreement, solely at their option, may elect to retain up to forty (40) hours of accrued vacation leave while on a Medical and Family Leave lasting longer than three (3) days and be placed in leave without pay status prior to exhausting all accrued

DRAFT

vacation leave. Unless the employee notifies the County of the election to retain vacation leave at the time of Medical and Family Leave, all paid leave will run concurrently for the entire Medical and Family Leave and must be exhausted prior to leave without pay. The County's Medical and Family Leave Policy (Policy #308) and ~~Personnel Rule~~§1.108 of the Colusa County Personnel Rules shall be interpreted and applied in a manner consistent with this provision.

ARTICLE VIII
HEALTH AND WELFARE

The County provides the health and welfare benefits identified in the Colusa County Personnel Rules to all bargaining unit employees subject to the terms which follow:

A. Medical Insurance

1. Except as provided in Section H, below the County will continue to contract with the Public Employees' Retirement System (CalPERS) for the purpose of providing medical insurance benefits for active employees in accordance with the Public Employees Medical and Hospital Care Act (PEMHCA) and eligible retired employees. Eligibility of active and retired employees and the dependents of active and retired employees to participate in this program shall be in accordance with regulations promulgated by CalPERS.

2. Pursuant to Government Code Section 22892 (a) the County will contribute the statutory minimum employer contribution (MEC) on behalf of each active employee and each retiree who subscribes for coverage.

3. Except as provided herein, represented employees shall purchase medical insurance through the CalPERS Medical Program.

    a. Represented employees who have alternative medical insurance coverage from another source, which provides "Minimum Essential Coverage" as that term is defined by the agencies responsible for the administration of the Affordable Care Act, may, by providing written proof of such alternative coverage to the County, opt out of the CalPERS Medical Program. Employees who opt out of the CalPERS Medical Program shall be required to provide written confirmation of alternative Minimum Essential Coverage annually thereafter, during the CalPERS open enrollment period. If such confirmation is not provided, the employee shall be required to enroll in the CalPERS Medical Program.

B. Dental Insurance

1. The County will continue to make dental insurance available to active employees and their eligible dependents of active employees through the County sponsored dental plan(s). The County's contributions toward such dental insurance shall be capped at $45.00 per month.

2. Except as provided herein, represented employees shall be required to purchase dental insurance through the County sponsored plan. Represented employees who have dental insurance coverage from another source may, by providing written proof of such alternative coverage to the County, opt out of the dental plan. Employees who opt out of the dental plan

shall be required to provide written confirmation of alternative coverage annually thereafter, during the dental plan open enrollment period. If such confirmation is not provided, the employee shall be required to enroll in the dental plan.

a. Employees who were hired prior to January 1, 2013 and who opt out of the dental plan pursuant to Section B.2. above, shall be provided a $45.00 per month cash-in-lieu benefit which the employee may deposit into an appropriate account within the County Cafeteria Plan or may be taken as a cash payment that will be applied to the employee's monthly paycheck. Amounts taken as cash will be treated as taxable income.

C. Cafeteria Plan

1. The County provides a Cafeteria Plan available to all represented employees. At a minimum, the County Cafeteria Plan provides non-elective County contributions that may be used to pay all or a portion of the monthly premium for county-sponsored group health insurance, and the pre-tax payments of the employee share of county-sponsored group health insurance premiums. The County Cafeteria Plan also includes a Flexible Spending Account, a Health Reimbursement Account, and a Dependent Care Account into which employees may make pre-tax contributions through the execution of Salary Reduction Agreements. Participation in the County Cafeteria Plan shall be pursuant to the terms, conditions and restrictions of the Plan Administrator and shall be subject to the terms that follow.

a. Effective December 1, 2025 and each December 1st thereafter, the County will make non-elective contributions into the Cafeteria Plan on behalf of each represented employee who is enrolled in the CalPERS medical plan pursuant to Section A.3., sufficient that when combined with the MEC totals the following:
   i. For employees who are enrolled in employee only coverage, the County will contribute a dollar amount sufficient that when combined with the MEC is the equivalent of the actual premium, for employee only coverage based upon CalPERS Gold plan.
   ii. For employees who are enrolled in employee plus one coverage, the County will contribute a dollar amount sufficient that when combined with the MEC is the equivalent of the actual premium, for employee plus one coverage based upon CalPERS Gold plan.
   iii. For employees who are enrolled in family coverage, the County will contribute a dollar amount sufficient that when combined with the MEC is the equivalent of the actual premium for family coverage based upon CalPERS Gold plan.

c. In the event an employee has excess County Cafeteria contributions (before or after AFLAC or Colonial), the dollar equivalent thereof shall be contributed to the employee's Health Reimbursement Account (HRA) to the extent allowable by law.

d. Upon expiration of the MOU, County contributions shall remain at the 2027 contribution rates until such time as an alternative agreement is reached or alternative terms are imposed following the exhaustion of impasse and fact-finding procedures, if applicable.

D. Medical In Lieu

1. Subject to Section D.2 below, employees who, pursuant to Section A.3 a, above elect not to receive County-sponsored CalPERS health benefits, the County will provide a monthly In-lieu

benefit which the employee may deposit into an appropriate account within the County Cafeteria Plan or may be taken as a cash payment that will be applied to the employee's monthly paycheck. Amounts taken as cash will be treated as taxable income.

a. Employees hired prior to January 1, 2013 and who qualify for the above-described In-lieu benefit shall receive $715 per month.

b. Employees hired after December 31, 2012 and who qualify for the above-described In-lieu benefit shall receive $333 per month as of January 1, 2024 and $400 per month as of January 1, 2025.

E. Part Time Employees

1. Part time employees regularly scheduled to work twenty (20) or more, but fewer that thirty (30) hours a week will be eligible for the health, dental, vision and Cafeteria Plan benefits appropriate to their hire-date equal to the pro rata relationship between the hours regularly scheduled to work and full time. Benefits for employees who are regularly scheduled to work thirty (30) hours or more per week will not be prorated.

   a. Part time employees regularly scheduled to work twenty (20) hours or more but fewer than thirty (30) hours each week are not required to accept county-sponsored health benefits and are not eligible for cash-in-lieu benefits.

   b. Part time employees regularly scheduled to work thirty (30) hours or more each week are subject to the provisions of Section A.3. above and may be eligible for cash-in-lieu benefits if they satisfy the requirements of Section A.3a.

F. Vision Care and Employee Assistance Plans

1. Vision insurance shall be provided in accordance with the Vision Plan and shall include at a minimum an annual examination and the replacement of lenses and frames every twelve (12) months. The County will contribute one-hundred percent (100%) of the monthly premium for employee-only coverage. Employees may enroll eligible family members at the employee's expense and subject to the rules of the insurance provider.

2. The County shall provide to each represented employee an Employee Assistance Plan that includes up to six (6) visits during each calendar year with a designated Health Care Provider. Such Employee Assistance shall be strictly confidential, and the employee need only show proof of employment with Colusa County to receive this benefit.

G. Health Reimbursement Arrangement

1. The County will make an IRS qualified Health Reimbursement Arrangement (HRA) available for eligible represented employees who retire from the County and enroll in the County-Sponsored Health Plan. Subject to the conditions described below, the County will make monthly contributions into the HRA on behalf of each eligible retiree.

   a. For employees hired before January 1, 2013 and who retired prior to the execution of this MOU, the County will continue to contribute $128.26 per month to the retiree's HRA. This retiree HRA contribution is separate from and in addition to the PEMHCA Minimum Employer Contribution (MEC).

DRAFT

b. For employees hired before January 1, 2013 and who retire following the execution of this MOU, the County will contribute $128.26 per month, less any future increases to the MEC, to the retiree's HRA, so that the combination of the MEC and the retiree HRA contribution does not exceed $267.26 per month. This retiree HRA contribution is separate from the MEC.

c. Employees hired after January 1, 2013 and who subsequently retire are not eligible for the $128.26 retiree HRA contribution provided herein. Such retirees receive only the MEC.

2. Effective October 1, 2025, the County will contribute $75 per month into individual IRS qualified Health Reimbursement Arrangement (HRA) accounts for each active employee. This contribution is in addition to any excess cafeteria funds. Employees will be responsible for any administrative fees associated with their HRA account. Upon retirement the remaining balance of an active employee's HRA will be rolled into the employee's retiree HRA.

H. Employee Wellness Program.

The County will reimburse employees covered by this Agreement for up to 15% of their monthly gym membership fee through the Trindel Insurance program. The County, through the Human Resources Department, will provide information to employees about this program.

I. Health Care Compliance

1. The Parties intend to comply with legislative and regulatory requirements for the provision of health care insurance and benefits. If, during the term of this MOU, it is determined that the County is out of compliance with any health care related mandate or mandates, the County will take the steps necessary to comply with the law.

2. Before taking action pursuant to paragraph 1 above, the County will notify the Association of the issue and the County's intended action. Time permitting and at the request of the Association, County representatives will meet with Association representatives before acting. If the actions deemed necessary to comply with the law impact employee benefits, the County and the Association will meet and confer regarding such impacts.

ARTICLE IX
RETIREMENT

A. Retirement Plans

1. CalPERS Retirement Benefits

a. The County's contract with CalPERS provides the following retirement benefits for bargaining unit employees. CalPERS determines an employee's membership category as classic or new.

1. Tier 1 – Retirement benefits for miscellaneous "classic" members hired prior to December 31, 2012 shall receive the following CalPERS benefits.

- 3% @60 retirement formula
- Single highest year final compensation period

- Employee pays an 8% member contribution

2. Tier 2 – Retirement benefits for miscellaneous "new" members hired on or after January 1, 2013 are as follows:

   - 2% @ age 62 retirement formula
   - Three-year average final compensation period
   - Employee pays 50% of the normal cost as determined by CalPERS

b. To the extent allowable by CalPERS, the County will continue to provide the following optional retirement enhancements:

   - Military Service Credit as Public Service for Miscellaneous and Safety employees pursuant to Government Code Section 21024.

   - Pre-Retirement Option 2W Death Benefit pursuant to Government Code Section 21548.

c. Member's contribution toward retirement costs are paid subject to the provisions of section 414(h)(2) of the Internal Revenue Code.

2. Should the statutory minimum employee member contribution rates for the above retirement plans be increased through State legislative or CalPERS administrative action during the term of this Agreement, either party may request to reopen this section to negotiate possible changes to the employee contribution rates specified in this MOU. Unless required by law, the employee contribution rates specified above will not change during the term of this MOU without mutual agreement of the parties.

B. Internal Revenue Code Section 457 Deferred Compensation Plans

1. The County will continue to make IRC section 457 deferred compensation plans (IRC 457 Plans) available to represented employees, subject to the terms and conditions of plan sponsors which, in some cases, may require minimum employee contributions. Employee participation in such plans is voluntary.

2. Except for the matching contributions provided below, the County shall not make contributions on behalf of represented employees. The County will match employee contributions to a county-offered IRC 457 Plan and, effective October 1, 2025, contribute increased amounts as follows:

   a. For employees with up to seven (7) years of county service, $60.00 per month. To qualify for matching contributions, employees must contribute an amount equal to or greater than the plan minimum contribution.

   b. For employees with seven (7) to fifteen (15) years of county service up to $80.00 per month. To qualify for matching contributions, employees must contribute an amount equal to or greater than the plan minimum contribution.

   c. For employees with more than fifteen (15) years of county service up to $100.00 per month. To qualify for matching contributions, employees must contribute an amount equal to or greater than the plan minimum contribution.

DRAFT

3. Specific information regarding each of the available IRC 457 Plans may be obtained from the Human Resources Department.

ARTICLE X
MISCELLANEOUS

A. Personal Protective Equipment.

1. Employees may be required to wear personal protective equipment, including but not limited to prescription safety eyeglasses, which will be provided by the County at no cost to employees If a Department Head determines that employees are required to wear safety footwear, the County will, on an annual basis, reimburse the employee for the cost of such footwear in annual reimbursements up to $200 for each 12-month period from July 1 to June 30; subject to the County' s claims procedures, with no benefit carry-over, and employees on any type of long-term leave of absence will be ineligible for reimbursement until they return to full duty status.

B. Required Licenses.

1. Employees are responsible for meeting the requirements and for paying any fees involved in obtaining necessary licenses, certificates, permits, and registrations. However, where such licenses, certificates, permits, and registrations are required in order for the employee to maintain his/her current position, reimbursement may be sought from his/her employer upon proof of successful completion of tests or other requirements. Department heads are responsible for informing their employees that their duties require them to obtain such licenses, etc., and for seeing that their employees obtain the licenses. Department heads should make available relevant information regarding applications, fees, and qualifications for licenses required by positions within their department.

C. Layoffs.

1. Layoffs in Merit and non-general fund Departments shall be contained within those Departments with no right for laid off employees to bump outside the Departments.

ARTICLE XI
SAVINGS

If any provision of this Agreement should be held invalid by operation of law or by tribunal of competent jurisdiction, or if compliance with or enforcement of such provision shall be restrained by such tribunal, the remainder of the Agreement shall remain in full force and effect.

ARTICLE XII
PERSONNEL RULES

Upon implementation of this Agreement, any terms and conditions of employment not specifically discussed herein shall be governed by the provisions of the Colusa County Personnel Rules.

DRAFT

ARTICLE XIII
FULL UNDERSTANDING

This Agreement constitutes the full understanding of the parties with respect to the matters set forth herein. The parties further agree that any amendment to this Agreement during the term of the Agreement must be reduced to writing and may be done only by mutual consent of the parties.

ARTICLE XIV
TERM

This Agreement shall remain in full force and effect from October 1, 2025, through and including September 30, 2027 provided that the County and/or the CCEA shall have the right to reopen negotiations limited to discussions regarding salary increases and lump sum payments, only, no later than September 1, 2026.

Dated: _____
Colusa County Employee Association

_____
Ann Nordyke
President

Dated: _____
County of Colusa

_____
Daurice Kalfsbeek-Smith
Chair of the Board

ATTEST: Marcos Kropf, Interim Clerk to the Board of Supervisors

_____
Patricia Rodriguez, Deputy Clerk

_____
Madison Williams
CCEA Chief Negotiator

_____
Dar Rhodes
HR Director / County Chief Negotiator

DRAFT

MEMORANDUM OF UNDERSTANDING

Between

THE COUNTY OF COLUSA

And

THE COLUSA COUNTY EMPLOYEES' ASSOCIATION
(Professional - Administrative Bargaining Unit)

DRAFT

TERM
October 1, 2025 – September 30, 2027

TABLE OF CONTENTS

PREAMBLE 4

ARTICLE I – RECOGNITION 4

ARTICLE II – CCEA RIGHTS

A. CCEA Rights 4
B. Fair Share Agreement 4
C. Public Employee Communication 5
D. Attendance at Board of Supervisors' Meetings 6
E. Association Leave Bank 6

ARTICLE III – MANAGEMENT RIGHTS 7

ARTICLE IV – GENERAL PROVISIONS

A. Strikes and Lockouts 7
B. No Reprisals 7

ARTICLE V – SALARIES

A. Salaries 7
B. Night Differential Pay 8
C. Bilingual Pay 8
D. Emergency Standby Pay and ~~Emergency~~ Call Back Pay 8
E. Overtime 9
F. Time Worked While on Leave 9
G. Temporary Promotions (Temporary Upgrade Pay) 9
H. Out of Class Assignments 10
I. Agricultural Equipment Operator Assignments 10
J. Inpatient Interventionist Assignments 11
K. Compensation for Chaperones Working 24-Hour Schedule 11

ARTICLE VI – HOLIDAYS

A. Holidays 11
B. Floating Holiday 12
C. Newly Declared Federal Holidays 12
D. Holiday Compensation 13

ARTICLE VII – LEAVES

A. Vacation 13
B. Sick Leave 14
C. Bereavement Leave 15
D. Jury Duty or Court Witness 16
E. Education Leave 16
F. All Leaves Recognized by Law 16

DRAFT

TABLE OF CONTENTS (*Continued*)

G. Required Continuing Professional Education Leave 16

ARTICLE VIII – HEALTH AND WELFARE

A. Medical Insurance 17
B. Dental Insurance 17
C. Cafeteria Plan 18
D. Medical-In-Lieu 18
E. Part Time Employees 19
F. Vision Care and Employee Assistance Programs 19
G. Health Reimbursement Arrangement 19
H. Employee Wellness Program 20
I. Health Care Compliance 20

ARTICLE IX – RETIREMENT

A. Retirement Plan 20
1. CalPERS Retirement Benefits 20
2. Retirement Contributions 20
B. Internal Revenue Code Section 457 Deferred Compensation Plans 21

ARTICLE X – MISCELLANEOUS

A. Personal Protective Equipment 22
B. Required Licenses 22
C. Layoffs 22
D. Partial Day Absences 22

ARTICLE XI – SAVINGS 23

ARTICLE XII – PERSONNEL RULES 23

ARTICLE XIII – FULL UNDERSTANDING 23

ARTICLE XIV – TERM 23

SIGNATURES 23

DRAFT

PREAMBLE

This Memorandum of Understanding ("MOU" or "Agreement") is entered into by and between the County of Colusa ("County") and the Colusa County Employees Association ("CCEA" or "Association") and sets forth the wages, benefits, hours of work, and other terms and conditions of employment for County employees assigned to the Professional-Administrative Bargaining Unit.

ARTICLE I
RECOGNITION

Pursuant to Government Code Section 3500, et seq. and applicable provisions of the Colusa County Personnel Rules, the County recognizes the CCEA as the exclusive representative for all County employees assigned to the Professional-Administrative Bargaining Unit.

ARTICLE II
CCEA RIGHTS

A. CCEA Rights

1. CCEA shall have all rights and privileges provided by the United States Constitution, the California State Constitution, Federal law, California State law, and the Colusa County Personnel Rules.

B. Dues Deduction

1. The County shall deduct CCEA membership dues and any other agreed-upon payroll deductions to the extent permitted by law from the monthly pay of each bargaining unit employee in accordance with the procedures set forth herein.

    a. Dues paying bargaining unit employees who have affirmatively consented to or authorized dues deductions shall be entitled to have dues deducted upon signing and filing with CCEA an authorization form provided by Association. CCEA will notify the County of the employee's name and the amount of dues to be withheld. The dues deduction form currently in use may continue to be utilized by CCEA.

    b. The County agrees to direct each bargaining unit employee to CCEA in response to any questions or concerns about dues or any other mutually agreed payroll deduction.

    c. CCEA is responsible for providing the County with timely information about changes to employee dues and any other lawful CCEA-related payroll deductions.

    d. Dues withheld by the County shall be transmitted monthly to the CCEA officer designated in writing by the Association as the person authorized to receive the funds at the address specified.

    e. A bargaining unit employee's earnings must be regularly sufficient after other legal and required deductions are made to cover the amount of the authorized CCEA dues deductions. If a bargaining unit employee is in a non-pay status during only part of the pay period and the salary is not sufficient to cover the full withholding, no deduction shall be made.

    f. CCEA shall refund to the County any amounts paid to it in error upon presentation of supporting

DRAFT

evidence. The County will deduct and remit to CCEA any amounts which were not deducted in accordance with the procedures prescribed herein.

2. The County shall make payroll deductions in reliance on CCEA's certification that the Association has and will maintain an authorization signed by each employee who affirmatively consents to pay CCEA membership dues. Similarly, the County shall only cancel or modify membership dues or any other mutually agreed payroll deduction for any bargaining unit employee in reliance on information provided by CCEA to the extent permitted by law.

3. The County shall not request that CCEA provide a copy of any bargaining unit employee's authorization unless a dispute arises about the existence or terms of the authorization.

4. CCEA shall indemnify, defend, protect and hold harmless the County and its elected and appointed officials, officers, employees, officers and agents from and against any and all claims, liabilities, losses, damages, fines, penalties, claims, demands, suits, actions, causes of action, judgments, costs and expenses arising from the application of this section, including, but not limited to, any claims made by bargaining unit employees for the return of membership dues deducted by the County in reliance on CCEA's certification, and any claims made by any bargaining unit employees for any deduction cancellation or modification the County made in reliance on the information provided by CCEA.

C. Public Employee Communication

1. This provision applies to all new employees hired into CCEA bargaining unit positions and is intended to comply with the provisions of Government Code, sections 3555 et seq.

    a. The County will provide CCEA with not less than ten (10) calendar days' advance written notice of the time, date and location of all new employee orientation meetings, unless an urgent and unforeseeable need for a new employee orientation meeting precludes the County from providing CCEA with ten (10) calendar days' advance notice. The advance notice will include the number of CCEA bargaining unit employees attending the orientation meetings. Notice will be made by way of email to the CCEA President or another contact person designated by CCEA.

    b. Upon request, CCEA will be given up to ten (10) minutes as part of the new employee orientation meetings to present information to bargaining unit employees generally relating to CCEA's role as representative, CCEA membership information, the rights and obligations created by the MOU and County personnel rules, and to answer questions. One (1) CCEA representative may present information to the new employees. Management representative shall excuse themselves and not be present during CCEA's portion of the new employee orientation meetings.

    c. The CCEA representative who present information at the new employee orientation meetings may do so while on duty without the loss of compensation, provided CCEA advises the Human Resources Director of the names of the employees who will be presenting information on behalf of CCEA at the new employee orientation meetings.

    d. The County shall not disclose the date/time/place of the new employee orientation to anyone other than the new employees and their departments, CCEA, and any vendors who are contracted to provide a service at the new employee orientation.

DRAFT

2. Information Requirements – The County will provide CCEA with a digital file via email to the email address designated by CCEA containing the following information for each employee to the extent the County has the information on file:

   - Name
   - Job title
   - Work location
   - Personal telephone number (may be home or cellular as provided by employee)
   - Home address
   - Personal email addresses if provided by the employee and on file with the County (new hires only) unless the employee submits a written request to the County and CCEA to withhold disclosure of his/her personal email address

   The above information will be provided on a monthly basis, except that the County is not required to provide personal telephone numbers, home addresses or personal email addresses unless requested by CCEA.

D. Attendance at Board of Supervisors' Meetings

1. A maximum of two (2) CCEA representatives may simultaneously attend any and all Board of Supervisors meetings on County time including budget hearings. The names of CCEA representatives who are authorized to attend Board of Supervisors meetings on County time must be provided to the Human Resources Director on or before July 1 of each year. Any combination of two (2) authorized CCEA representatives may attend the meetings at any given time.

E. Association Leave Bank

1. Commencing on October 1, 2025, and each October 1 thereafter, the County shall contribute twenty-four (24) hours per contract year to a CCEA Association Leave Bank to be used by designated CCEA representatives to conduct representational duties on behalf of bargaining unit members, excluding activities directly related to negotiations. Designated CCEA representatives who utilize Association Leave Bank hours shall not suffer a loss of compensation or other benefits. Unused hours shall not roll over from year to year and have no cash-out value.
2. **Request and Notification:** Union Representatives shall request Association Leave Bank time from their immediate supervisor in advance whenever possible, with a courtesy copy to the HR Director. Requests shall state the date and anticipated start/end time and note "Union representational duties." No employee names or confidential details are required.
3. **Tracking:** The HR Department shall track Association Leave Bank usage and provide quarterly usage reports to the Union upon request.
4. **Designated Representatives:** The Union shall annually provide the County with a list of designated representatives authorized to use Association Leave Bank time. Only those listed may access the Bank.
5. **Additional Time:** Any time used beyond the annual allotment shall be unpaid unless otherwise approved in writing by the County.

DRAFT

ARTICLE III
MANAGEMENT RIGHTS

Except as specifically limited by the terms of this MOU, the County, through its Board of Supervisors, shall have all management rights provided by the United States Constitution, the California State Constitution, California State Law, and Colusa County Personnel Rules.

ARTICLE IV
GENERAL PROVISIONS

A. Strikes and Lockouts

1. The CCEA agrees that during the term of this Agreement, neither it nor its officers, agents or members will engage in, encourage, sanction, support or suggest any strikes, work stoppages, slowdowns, or any other similar actions which would involve suspension of, or interference with, the normal work of the County.

2. The County will not lockout employees during the term of this Agreement.

B. No Reprisals

1. The County shall not interfere with or discriminate against any employee by reason of his or her membership in the CCEA or activity approved by this Agreement, nor will the County discourage membership in the CCEA or encourage membership in any other employee organization.

2. The CCEA recognizes its responsibility as the exclusive representative and agrees to represent all employees without discrimination, interference, restraint or coercion.

3. The provisions of this Agreement shall be applied equally to all employees without discrimination as to political opinion or affiliation, race, color, religious creed, sex, marital status, actual or perceived sexual orientation, age, national origin, military, or veteran status, genetic information, gender, gender identity, gender expression, medical condition, physical or mental disability.

ARTICLE V
SALARIES

A. Salaries

1. **One-time Lump Sum Payment**: In lieu of a Cost-of-Living (COLA) adjustment in 2025 and 2026, members shall receive the following one-time lump sum payment to be issued no later than 30 days from the acceptance of the negotiated package:
   - Employees with at least 12 months of service with the County shall receive a lump sum payment of $1,500.
   - Employees with less than one year of service with the County shall receive a lump sum payment of $750.

   The parties agree that these are one-time payments which do not meet the definition of compensation earnable nor does it qualify as any applicable special compensation for CalPERS reporting purposes. The County will issue this payment as a separate check from normal wages.

DRAFT

2. **Re-Opener Clause**: The County and CCEA shall agree to reopen negotiations limited to discussions regarding salary increases and lump sum payments only no later than September 1, 2026.

3. **Me-too Clause**: If during the term of this Memorandum of Understanding, the County grants any across-the-board or other uniform wage/salary increase (excluding regularly scheduled step increases, pre-existing contractually mandated increases, or any other legally mandated salary increase) to any employee or defined class of employees, including but not limited to employees of all recognized bargaining units, the County will grant the same wage/salary increase for all represented employees covered by this MOU on the same date, unless the wage/salary increase was granted in exchange for a reduction to a current benefit. For purposes of this provision, an across the board or uniform wage/salary increases includes any increases granted as percentages of existing wages/salaries, fixed dollar amounts, formula-based increase and tiered increases within identifiable employee classifications and groups, but excludes reclassifications and salary range adjustments for individual classifications.

B. Night Differential Pay

1. For employees covered by this Agreement, Night Differential Pay, which may be provided pursuant to Personnel Rule 1.107.1(k), is $1.50 per hour provided that employees called into work shall not be eligible for night differential pay.

Per Personnel Rule 1.107.1(k) Any County employee who performs the majority of his/her regular shift between the hours of four p.m. and eight a.m. (including but not limited to peace officers at the Sheriff's Department, road department equipment service workers, custodians, and library staff) shall receive additional compensation per shift.

C. Bilingual Pay

1. Bilingual Pay shall be paid to those qualified employees in positions where the County receives a benefit from the employee's ability in the second language. Effective December 1, 2025, qualified employees will receive bilingual pay based on their level of proficiency. Level I (speaking only) will be eligible for $80 per month and Level II (speaking, reading & writing) will be eligible for $100 per month.

2. The determination of County benefit shall be based on the Department Head's recommendation and approval of the Human Resources Director provided that such approval shall not be unreasonably withheld. Qualification shall be based on passing an approved language proficiency test modeled on the CHP proficiency test ("Test") and demonstrated proficiency in speaking, understanding, writing and reading the language.

Employees currently receiving bilingual pay will be placed in a tier based on current test scores. If the original test is not available, an assessment will need to be completed; the employee will remain at Level I until the assessment takes place. For employees whose assessment cannot be completed by December 1, 2025, any resulting adjustment in pay will be retroactive to December 1, 2025 for those employees only.

D. Emergency Standby Pay and Call Back Pay

1. Emergency Standby Pay of $25.00 per day shall be paid to employees required to be available outside their normal work hours on a standby basis for "emergency work" whether or not called back to work. For purposes of this section, emergency work is work that must be performed in response to an unforeseen sudden event which requires immediate response to prevent, mitigate or eliminate a substantial hazard to life, health, or property.

   ~~If~~ Employees on emergency standby who are called back to perform emergency work shall be paid for all hours worked at 1.5 times their regular hourly rate of pay or equivalent compensatory time off (CTO) with a guaranteed minimum of two (2) hours; except on holidays the rate of 1.5 times the employee's regular hourly pay rate shall be paid in addition to the paid holiday.

2. Call Back Pay: Employees who are not on emergency standby but are called back to work outside their regularly scheduled work hours to perform approved work, shall be paid for all hours over forty (40) called back to work at 1.5 times their regular hourly rate of pay or equivalent CTO with a guaranteed minimum of two (2) hours. Employees who are called back on holidays shall receive call back pay in addition to holiday pay pursuant to Article VI paragraph C.

   a. Notwithstanding the above, Public Works Department employees receive 1.5 times their regular rate of pay for all hours worked during a call back relating to road emergencies with a two (2) hour minimum.

E. Overtime

1. Overtime for employees covered by this Agreement shall be as specified in Colusa County Personnel Rules 1.107.1 Sections "l" through "t", except as follows:

   a. Hours worked in excess of 40 hours per week shall be compensated at the employee's election either at the rate of 1.5 times the employee's regular hourly rate of pay or as compensatory time off ("CTO") calculated at the rate of 1.5 times the number of overtime hours worked provided:

      1) CTO hours may be accumulated to a maximum of 80 hours at any given time and may be taken, with the advance approval of the employee's supervisor, as paid time off during the same calendar year in which they are accumulated;

      2) CTO hours are paid at an employee's regular rate of pay at the time the CTO is paid out;

      3) All accumulated CTO hours will be utilized or cashed out no later than December 31 of each year; and

      4) All accumulated CTO hours will be cashed out upon separation from County employment.

F. Time Worked While on Leave

1. Exempt employees on sick or vacation leave are not expected to work, which includes taking phone calls and checking or responding to e-mails. An exempt employee who does work may request a credit be added for actual time worked back into the relevant leave account. Any such request shall include supporting written documentation showing how and why the time was spent.

G. Temporary Promotions (Temporary Upgrade Pay)

DRAFT

1. When a position becomes vacant and there is a need to fill the vacant position pending recruitment for a permanent appointment, the appointing authority may request the Human Resources Director to authorize a temporary promotion of a regular full or part-time employee from a, lower level job class that is directly related to the vacant position.

   For purposes of this section, "vacant position" does not refer to a position that is temporarily available due to an employee's leave of absence.

2. The temporarily promoted employee shall meet the minimum qualifications for the higher-level job class as determined by the Human Resources Director. Employees serving a temporary promotion may apply for regular promotion to fill the permanent vacancy.

3. Temporary promotions provided under this section are intended to comply with California Government Code section 20480 and described in CalPERS Circular Letter 200-021-18. Incumbents must be relieved of all duties of their former position in a temporary promotion. Temporary promotions must not exceed 960 hours in each fiscal year. The additional compensation paid to employees serving in a temporary promotion will be reported to CalPERS as temporary upgrade pay.

4. Any regular employee who is temporarily promoted under this section, will receive an increase in pay beginning with the first day of the temporary promotion. Increases in pay related to temporary promotion are calculated in the same manner as a regular promotion.

5. Upon termination of a temporary promotion, the temporarily promoted employee shall be restored to their prior permanent position as if the employee had never left. Employees who are temporarily promoted pursuant to this section and are also eligible for a merit increase in their permanent job classification shall be eligible for the merit increase while serving in the temporary promotion and their temporary promotional pay shall be adjusted to reflect the merit increase, if granted.

6. In the event a temporarily promoted employee receives a regular promotion to the vacant position without any lapse in time between the temporary promotion and the regular promotion, the employee's, time from the first day of temporary promotion shall count as service in the higher- level position for purposes of merit advancement in the higher salary range.

H. Out of Class Assignments

An employee may be requested to perform an out of class assignment for a limited term. Employees assigned to perform clearly established duties of a higher-level position or classification shall receive out of class pay equal to 5% of their base pay for each day they perform the higher-level duties. Employees are not required to assume all duties of the higher-level position or classification to receive out of class pay. Out of class pay pursuant to this section is not reportable to CalPERS and is not considered as part of the CalPERS retirement benefit calculation.

I. Agricultural Equipment Operator Assignments

Employees within the Department of Agriculture who are routinely and consistently assigned to operate or drive specialized agricultural equipment or vehicles requiring a Class B driver's license, shall receive special assignment pay equal to 5% of their base pay for the working pay period the assignment was performed.

J. Inpatient Interventionist Assignments

Employees shall receive an enhanced standby incentive pay when voluntarily accepting a shift for Inpatient Interventionist.

Standby pay of $25 per 8-hour shift will be paid to employees within the Behavioral Health Department who are offered and accept, on a rotational basis, patient crisis sitter or patient driver shifts, which require these employees to be available outside their normal work hours on a standby basis for emergency work, whether or not called in to work. If called back to perform emergency work, employees shall be paid for all hours worked at 1.5 times their regular hourly rate of pay or equivalent compensatory time off (CTO) with a guaranteed minimum of two (2) hours, except on holidays, the rate of 1.5 times their regular hourly pay rate shall be paid in addition to the holiday.

Crisis Sitter shifts are available for the following BHS classification: therapists, mental health specialists, case managers, family specialists and peer specialists. Driver shifts are available for all permanent status BHS employees with a valid CA driver's license. No employee may accept shifts that will cause the employee to work a 7-day work week.

K. Compensation for Chaperones Working 24-Hour Schedule

This provision is to address compensation for employees serving as chaperones and working a 24-hour schedule. During each 24-hour workday, employees will be allowed a six (6) hour sleep period commencing at 11:30 PM and ending at 5:30 AM the following morning ("sleep time window"). If the employee receives at least five (5) consecutive hours of uninterrupted sleep during the sleep time window (defined as not performing the duties of a chaperone or performing other work-related business required by the County), the six (6) hour sleep time shall be excluded from hours worked during the 24-hour work day and the employee will be compensated for 18 hours of work.

If, however, the employee is required to perform the duties of a chaperone or other work-related business during the sleep time window period, all time spent performing such work shall be considered additional hours worked. In the event the employee cannot get at least five (5) hours of uninterrupted sleep during the sleep time window period, the entire six (6) hour sleep time shall be regarded as hours worked.

ARTICLE VI
HOLIDAYS

A. Holidays

1. Employees covered by this Agreement are entitled to the paid holidays listed below and specified in section 1.108.2(f) of the Colusa County Personnel Rules, which shall be considered to fall on the day-of-the-week designated as the day of celebration by the Board, unless they work in which case paragraph "D" below controls.

2. To take time off work for holidays or be compensated, the County recognizes the following holidays:

- January 1st, known as "New Year's Day."
- The third Monday in January, known as "Martin Luther King, Jr. Day."
- February 12th, known as "Lincoln Day."
- The third Monday in February, known as "Presidents' Day."
- March 31st, known as "Cesar Chavez Day."

DRAFT

- The last Monday in May, known as "Memorial Day."
- **June 19th, known as "Juneteenth"**
- July 4th, known as "Independence Day."
- The first Monday in September, known as "Labor Day."
- The second Monday in October, known as "Columbus Day."
- November 11th, known as "Veterans Day."
- The fourth Thursday of November, known as "Thanksgiving Day."
- The day after Thanksgiving.
- **December 24th, known as "Christmas Eve"**
- December 25th, known as "Christmas Day."
- Every day appointed by the President **(see Section C below)** or Governor as a day free of work including but not limited to a national day of mourning, thanksgiving, or other day no matter how designated of national or statewide significance unless otherwise decided by the Board.

a. If any of the holidays recognized by the county falls on a Saturday, the preceding Friday will be a holiday.

b. If any of the holidays falls on a Sunday, the following Monday will be a holiday.

B. Floating Holiday

1. Employees covered by this Agreement may each fiscal year select one floating holiday one day not identified above.

C. Newly Declared Federal Holidays

1. Effective October 1, 2025, the County will recognize newly declared single-occurrence federal observances, commemorative days, or national moments of remembrance that are not designated as recurring federal holidays established by an act of Congress or Presidential proclamation, provided the holiday is not designated as a permanent, recurring federal holiday observed, nationally. Permanent, recurring federal holidays must be bargained. The County will provide employees the day off with pay in observance of any such newly declared federal observances, under the following conditions:

1. **Scope**: This provision applies only to federal holidays declared after September 30, 2025. It does not apply retroactively to holidays declared or observed prior to this date.
2. **Holiday Scheduling**: The recognized single-occurrence federal observance, commemorative day, or national moment of remembrance that are not designated as

recurring federal holidays will be observed in the same manner as other fixed-date or floating holidays already recognized by the County.

3. **Board Approval**: In recognition that federally declared observances, commemorative days, or national moments of remembrance are frequently announced with minimal advance notice, such declarations shall be deemed to carry the implicit approval of the Board of Supervisors, and no additional Board action shall be required.

D. Holiday Compensation

1. Employees who work on any of the holidays listed above and specified in section 1.108.2(f) of the Colusa County Personnel Rules shall be paid as their full compensation for working on a holiday two (2) times their regular hourly rate for each hour worked with no additional pay for the holiday. This section does not apply to employees on standby who are called in to work in an emergency situation whose pay rate is governed by Article V Paragraph E of this Agreement.

2. If a holiday falls on a Saturday or Sunday and either day is part of an employee's scheduled workweek, the employee will receive his regular rate of pay and the day shall be counted as a regular workday.

3. If an employee resigns and the last day worked is the day before a holiday, the employee will not be paid for the holiday.

4. Temporary, extra help, limited term and seasonal employees required to work on a holiday shall be paid the regular rate of pay established for their positions.

5. If an employee is on a leave of absence without pay, the employee will not be paid for holidays except as required by law.

ARTICLE VII
LEAVES

A. Vacation

1. Employees covered by this Agreement are entitled to Vacation Leave with pay as provided in section 1.108.2(a) et seq. of the Colusa County Personnel Rules.

1) The County vacation leave with pay plan functions under an accrual and usage plan (the plan). Under the plan, vacation will be earned and credited on a monthly-basis

2) Employees are encouraged and expected to use all vacation in the year in which credited;

3) Vacation shall be used in no less than fifteen-minute increments;
   a) Only accrued leave can be used. If there is no leave on the books, it cannot be used.

4) Vacation must be scheduled in advance, subject to pre-approval by the employee's supervisor;

5) Appointing authorities are charged with actively managing the vacation usage of their employees, to ensure vacation is used in accordance with this section;

6) Vacation shall accrue on an hourly basis, based on an employee's anniversary date. An employee may accumulate a maximum of 1.5 times their annual accrual. An employee who accumulates vacation in excess of the maximum allowable hours will stop accruing vacation until their accumulated vacation hours fall below the maximum allowed.

7) Vacation shall accrue and may be accumulated at the following rates:

Time in Service	Annual Vacation	Monthly Accrual 37.5-hour week	Monthly Accrual 40-hour week	Maximum Accumulation 37.5-hour week	Maximum Accumulation 40-hour week
0 through 3 yrs.	0 – 10 days	6.25 hours	6.666 hours	112.50 hours	120.00 hours
4 through 7 yrs.	15 days	9.375 hours	10.000 hours	168.75 hours	180.00 hours
8 through 11 yrs.	20 days	12.500 hours	13.333 hours	225.00 hours	240.00 hours
12+ yrs.	25 days	15.625 hours	16.666 hours	281.25 hours	300.00 hours

8) Vacation hours accumulated by an employee before January 1, 2009, will be carried forward in a separate employee vacation account, which may be referenced as the "pre-2009 vacation account," subject to the following:

a) Effective January 1, 2014, the value of each vacation hour included in an employee's pre-2009 vacation account will be calculated at the employee's current hourly rate of pay and will be frozen at that amount.

b) If, subsequent to January 1, 2014, an employee takes vacation-time off using vacation hours credited to the pre-2009 vacation account, they will be granted vacation time off on an hour-for-hour basis, without regard for their current rate of pay.

9) Legal holidays occurring during vacation leave will not be charged as vacation leave but as a holiday;

10) Employees may request conversion into cash payments of up to forty (40) hours of accrued vacation not more than once in a fiscal year. Employees may also elect such cash conversion to be deposited into a deferred compensation account in the employee's name. Employees must retain a minimum of forty (40) hours in their leave bank to make a conversion request.

11) Part-time employees shall accrue and may accumulate vacation leave on a pro-rata basis equal to their prorated service time and their prorated hours worked;

12) Upon termination, the employee or their estate will be paid the monetary value of the earned unused vacation in the employee's vacation account.

13) Starting from the first complete pay period after October 1, 2023, all employees will be able to include their previous public service experience for calculating vacation accrual. Verifiable experience is counted in complete years (equivalent to twelve [12] months). Each employee shall be credited for the purpose of accrual, with years of service at other public agencies on a year for year basis. The maximum vacation allowance will correspondingly align with the updated years of service for vacation.

B. Sick Leave

1. Employees covered by this Agreement are entitled to accrue, accumulate and use Sick Leave with pay as provided in section 1.108.2(b) et seq. of the Colusa County Personnel Rules except as follows:

a. Effective January 1, 2017, each County employee who separates from County service will be compensated for unused sick leave based on the formula specified in section 1.108.2(b), subsection et seq. except that:

i. Employees who separate from County service for any reason with unused sick leave that was accrued and accumulated before December 31, 2009 may choose to receive the entire amount owed in cash pursuant to section 1.108.2(b)(6) et seq. or may choose to have the entire amount owed deposited into a county offered IRC 457 Plan subject to the limitations of such Plan.

b. Effective January 1, 2017, employees who retire from County service with unused sick leave that was accrued and accumulated after December 31, 2009 will be compensated based on the formula and conditions which follow:

i. An employee who retires with at least 15 years of Colusa County service and a minimum combined (old bank plus new bank) sick leave balance of 200 hours at the time of retirement will receive an amount equal to twenty-five percent (25%) of his/her current base hourly salary for all qualified hours.

ii. An employee who retires with at least 20 years of Colusa County service and a minimum combined (old bank plus new bank) sick leave balance of 250 hours at the time of retirement will receive an amount equal to fifty percent (50%) of his/her current base hourly salary for all qualified hours.

iii. An employee who retires with at least 25 years of Colusa County service and a minimum combined (old bank plus new bank) sick leave balance of 300 hours at the time of retirement will receive an amount equal to seventy-five percent (75%) of his/her current base hourly salary for all qualified hours.

iv. An employee who retires with at least 30 years of Colusa County service and a minimum combined (old bank plus new bank) sick leave balance of 350 hours at the time of retirement will receive an amount equal to one hundred percent (100%) of his/her current base hourly salary for all qualified hours.

Employees who are compensated for unused sick leave pursuant to paragraphs b.i. through b.iv. above may ~~will~~ have ~~the~~ any ~~entire~~ amount owed deposited into a County offered IRC 457 Deferred Compensation Plan subject to the limitations of such plan and/or to have any amount owed deposited into the County-sponsored Health Reimbursement Arrangement ~~on their behalf~~ subject to the limitations of the HRA plan document.

1. For the purposes of this benefit only, County employees who are elected to a County office will be compensated as though they had “retired” effective the date they assume the County elected office.

C. Bereavement Leave

1. Bereavement leave will be granted in the case of death in the immediate family of the employee or spouse, pursuant to Colusa County Personnel Rules 1.108.2(d).

D. Jury Duty or Court Witness

1. Employees who are required to serve on jury duty shall receive full pay, but shall remit to the County any compensation, except reimbursement for parking, meals, mileage or lodging which may be received for such service.

DRAFT

2. An employee who is required to appear as a witness in a court case which involves the County or County business shall receive full pay, but shall remit to the County any witness fees, including fees received as an expert witness, except reimbursement for parking, meals, mileage or lodging which may be received for such service.

E. Education Leave

1. Upon the recommendation of the department head, the Board of Supervisors may grant an employee up to nine (9) months of educational leave without pay. The department head shall consider the following criteria in making recommendation to the Board to grant educational leave: Whether

    a. Education or training will increase on-the-job skills; and

    b. Education or training will increase the employee's qualifications for promotion; and

    c. The employee indicates a desire to make County employment a career; and

    d. The employee has demonstrated high motivation for self-improvement; and

    e. The employee has shown indications of superior work performance in present position; and

    f. The employee has shown evidence of promotional potential indicating the capacity to perform in a more responsible position; and

    g. The employee has shown potential, motivation and suitability for further educational opportunity.

F. All Leaves Recognized By Law

As stated in the Colusa County Personnel Rules section 1.108.2, employees covered by this Agreement may take any leave recognized by law.

1. Employees covered by this Agreement, solely at their option, may elect to retain up to forty (40) hours of accrued vacation leave while on a Medical and Family Leave lasting longer than three (3) days and be placed in leave without pay status prior to exhausting all accrued vacation leave. Unless the employee notifies the County of the election to retain vacation leave at the time of Medical and Family Leave, all paid leave will run concurrently for the entire Medical and Family Leave and must be exhausted prior to leave without pay. The County's Medical and Family Leave Policy (Policy #308) and §1.108 of the Colusa County Personnel Rules shall be interpreted and applied in a manner consistent with this provision.

G. Required Continuing Professional Education Leave

1. Professional employees will be provided paid time away from work to complete necessary continuing education needed to maintain their licenses.

ARTICLE VIII
HEALTH AND WELFARE

The County provides the health and welfare benefits identified in the Colusa County Personnel Rules

DRAFT

to all bargaining unit employees subject to the terms which follow:

A. Medical Insurance

1. Except as provided in Section H, below the County will continue to contract with the Public Employees' Retirement System (CalPERS) for the purpose of providing medical insurance benefits for active employees in accordance with the Public Employees Medical and Hospital Care Act (PEMHCA) and eligible retired employees. Eligibility of active and retired employees and the dependents of active and retired employees to participate in this program shall be in accordance with regulations promulgated by CalPERS.

2. Pursuant to Government Code Section 22892 (a) the County will contribute the statutory minimum employer contribution (MEC) on behalf of each active employee and each retiree who subscribes for coverage.

3. Except as provided herein, represented employees shall purchase medical insurance through the CalPERS Medical Program.

    a. Represented employees who have alternative medical insurance coverage from another source, which provides "Minimum Essential Coverage" as that term is defined by the agencies responsible for the administration of the Affordable Care Act, may, by providing written proof of such alternative coverage to the County, opt out of the CalPERS Medical Program. Employees who opt out of the CalPERS Medical Program shall be required to provide written confirmation of alternative Minimum Essential Coverage annually thereafter, during the CalPERS open enrollment period. If such confirmation is not provided, the employee shall be required to enroll in the CalPERS Medical Program.

B. Dental Insurance

1. The County will continue to make dental insurance available to active employees and their eligible dependents of active employees through the County sponsored dental plan(s). The County's contributions toward such dental insurance shall be capped at $45.00 per month.

2. Except as provided herein, represented employees shall be required to purchase dental insurance through the County sponsored plan. Represented employees who have dental insurance coverage from another source may, by providing written proof of such alternative coverage to the County, opt out of the dental plan. Employees who opt out of the dental plan shall be required to provide written confirmation of alternative coverage annually thereafter, during the dental plan open enrollment period. If such confirmation is not provided, the employee shall be required to enroll in the dental plan.

    a. Employees who were hired prior to January 1, 2013 and who opt out of the dental plan pursuant to Section B.2. above, shall be provided a $45.00 per month cash-in-lieu benefit which the employee may deposit into an appropriate account within the County Cafeteria Plan or may be taken as a cash payment that will be applied to the employee's monthly paycheck. Amounts taken as cash will be treated as taxable income.

C. Cafeteria Plan

DRAFT

1. The County provides a Cafeteria Plan available to all represented employees. At a minimum, the County Cafeteria Plan provides non-elective County contributions that may be used to pay all or a portion of the monthly premium for county-sponsored group health insurance, and the pre-tax payments of the employee share of county-sponsored group health insurance premiums. The County Cafeteria Plan also includes a Flexible Spending Account, a Health Reimbursement Account, and a Dependent Care Account into which employees may make pre-tax contributions through the execution of Salary Reduction Agreements. Participation in the County Cafeteria Plan shall be pursuant to the terms, conditions and restrictions of the Plan Administrator and shall be subject to the terms that follow.

   a. Effective December 1, 2025 and each December 1st thereafter, the County will make non-elective contributions into the Cafeteria Plan on behalf of each represented employee who is enrolled in the CalPERS medical plan pursuant to Section A.3., sufficient that when combined with the MEC totals the following:

      i. For employees who are enrolled in employee only coverage, the County will contribute a dollar amount sufficient that when combined with the MEC is the equivalent of the actual premium, for employee only coverage based upon CalPERS Gold plan.
      ii. For employees who are enrolled in employee plus one coverage, the County will contribute a dollar amount sufficient that when combined with the MEC is the equivalent of the actual premium, for employee plus one coverage based upon CalPERS Gold plan.
      iii. For employees who are enrolled in family coverage, the County will contribute a dollar amount sufficient that when combined with the MEC is the equivalent of the actual premium for family coverage based upon CalPERS Gold plan.

   c. In the event an employee has excess County Cafeteria contributions (before or after AFLAC or Colonial), the dollar equivalent thereof shall be contributed to the employee's Health Reimbursement Account (HRA) to the extent allowable by law.

   d. Upon expiration of the MOU, County contributions shall remain at the 2027 contribution rates until such time as an alternative agreement is reached or alternative terms are imposed following the exhaustion of impasse and fact-finding procedures, if applicable.

D. Medical In Lieu

1. Subject to Section D.2 below, employees who, pursuant to Section A.3 a, above elect not to receive County-sponsored CalPERS health benefits, the County will provide a monthly In-lieu benefit which the employee may deposit into an appropriate account within the County Cafeteria Plan or may be taken as a cash payment that will be applied to the employee's monthly paycheck. Amounts taken as cash will be treated as taxable income.

   a. Employees hired prior to January 1, 2013 and who qualify for the above-described In-lieu benefit shall receive $715 per month.

   b. Employees hired after December 31, 2012 and who qualify for the above-described In-lieu benefit shall receive $333 per month as of January 1, 2024 and $400 per month as of January 1, 2025.

E. Part Time Employees

1. Part time employees regularly scheduled to work twenty (20) or more, but fewer that thirty (30) hours a week will be eligible for the health, dental, vision and Cafeteria Plan benefits appropriate to their hire-date equal to the pro rata relationship between the hours regularly scheduled to work and full time. Benefits for employees who are regularly scheduled to work thirty (30) hours or more per week will not be prorated.

    a. Part time employees regularly scheduled to work twenty (20) hours or more but fewer than thirty (30) hours each week are not required to accept county-sponsored health benefits and are not eligible for cash-in-lieu benefits.

    b. Part time employees regularly scheduled to work thirty (30) hours or more each week are subject to the provisions of Section A.3. above and may be eligible for cash-in-lieu benefits if they satisfy the requirements of Section A.3a.

F. Vision Care and Employee Assistance Plans

1. Vision insurance shall be provided in accordance with the Vision Plan and shall include at a minimum an annual examination and the replacement of lenses and frames every twelve (12) months. The County will contribute one-hundred percent (100%) of the monthly premium for employee-only coverage. Employees may enroll eligible family members at the employee's expense and subject to the rules of the insurance provider.

2. The County shall provide to each represented employee an Employee Assistance Plan that includes up to six (6) visits during each calendar year with a designated Health Care Provider. Such Employee Assistance shall be strictly confidential, and the employee need only show proof of employment with Colusa County to receive this benefit.

G. Health Reimbursement Arrangement

1. The County will make an IRS qualified Health Reimbursement Arrangement (HRA) available for eligible represented employees who retire from the County and enroll in the County-Sponsored Health Plan. Subject to the conditions described below, the County will make monthly contributions into the HRA on behalf of each eligible retiree.

    a. For employees hired before January 1, 2013 and who retired prior to the execution of this MOU, the County will continue to contribute $128.26 per month to the retirees HRA. This retiree HRA contribution is separate from and in addition to the PEMHCA Minimum Employer Contribution (MEC).

    b. For employees hired before January 1, 2013 and who retire following the execution of this MOU, the County will continue to contribute $128.26, less any future increases to the MEC, to the retiree's HRA, so that the combination of the MEC and the retiree HRA contribution does not exceed $267.26 per month. This retiree HRA contribution is separate from the MEC.

    c. Employees hired after January 1, 2013 and who subsequently retire are not eligible for the $128.26 retiree HRA contribution provided herein. Such retirees receive only the MEC.

2. Effective October 1, 2025, the County will contribute $75 per month into individual IRS qualified Health Reimbursement Arrangement (HRA) accounts for each active employee. This

contribution is in addition to any excess cafeteria funds. Employees will be responsible for any administrative fees associated with their HRA account. Upon retirement the remaining balance of an active employee's HRA will be rolled into the employee's retiree HRA.

H. Employee Wellness Program

1. The County will reimburse employees covered by this Agreement for up to 15% of their monthly gym membership fee through the Trindel Insurance program. The County, through the Human Resources Department, will provide information to employees about this program.

I. Health Care Compliance

1. The Parties intend to comply with legislative and regulatory requirements for the provision of health care insurance and benefits. If, during the term of this MOU, it is determined that the County is out of compliance with any health care related mandate or mandates, the County will take the steps necessary to comply with the law.

2. Before taking action pursuant to paragraph 1 above, the County will notify the Association of the issue and the County's intended action. Time permitting and at the request of the Association, County representatives will meet with Association representatives before acting. If the actions deemed necessary to comply with the law impact employee benefits, the County and the Association will meet and confer regarding such impacts.

ARTICLE IX
RETIREMENT

A. Retirement Plans

1. CalPERS Retirement Benefits

a, The County's contract with CalPERS provides the following retirement benefits for bargaining unit employees. CalPERS determines an employee's membership category as classic or new.

1. Tier 1 – Retirement benefits for professional-administrative "classic" members hired prior to December 31, 2012 shall receive the following CalPERS benefits.

   - 3% @60 retirement formula
   - Single highest year final compensation period
   - Employee pays an 8% member contribution

2. Tier 2 – Retirement benefits for professional-administrative "new" members hired on or after January 1, 2013 are as follows:

   - 2% @ age 62 retirement formula
   - Three-year average final compensation period
   - Employee pays 50% of the normal cost as determined by CalPERS

b. To the extent allowable by CalPERS, the County will continue to provide the following optional retirement enhancements:

DRAFT

- Military Service Credit as Public Service for Miscellaneous and Safety employees pursuant to Government Code Section 21024.

- Pre-Retirement Option 2W Death Benefit pursuant to Government Code Section 21548.

c. Member's contribution toward retirement costs are paid subject to the provisions of section 414(h)(2) of the Internal Revenue Code.

2. Should the statutory minimum employee member contribution rates for the above retirement plans be increased through State legislative or CalPERS administrative action during the term of this Agreement, either party may request to reopen this section to negotiate possible changes to the employee contribution rates specified in this MOU. Unless required by law, the employee contribution rates specified above will not change during the term of this MOU without mutual agreement of the parties.

B. Internal Revenue Code Section 457 Deferred Compensation Plans

1. The County will continue to make IRC section 457 deferred compensation plans (IRC 457 Plans) available to represented employees, subject to the terms and conditions of plan sponsors which, in some cases, may require minimum employee contributions. Employee participation in such plans is voluntary.

2. Except for the matching contributions provided below, the County shall not make contributions on behalf of represented employees. The County will match employee contributions to a county-offered IRC 457 Plan and effective October 1, 2025 contribute increased amounts as follows:

a. For employees with up to seven (7) years of county service, $60.00 per month. To qualify for matching contributions, employees must contribute an amount equal to or greater than the plan minimum contribution.

b. For employees with seven (7) to fifteen (15) years of county service up to $80.00 per month. To qualify for matching contributions, employees must contribute an amount equal to or greater than the plan minimum contribution.

c. For employees with more than fifteen (15) years of county service up to $100.00 per month. To qualify for matching contributions, employees must contribute an amount equal to or greater than the plan minimum contribution.

3. Specific information regarding each of the available IRC 457 Plans may be obtained from the Human Resources Department.

ARTICLE X
MISCELLANEOUS

A. Personal Protective Equipment.

1. Employees may be required to wear personal protective equipment, including but not limited to prescription safety eyeglasses, which will be provided by the County at no cost to employees. If a Department Head determines that employees are required to wear safety footwear, the County will, on

an annual basis, reimburse the employee for the cost of such footwear in annual reimbursements up to $200 for each 12-month period from July 1 to June 30; subject to the County' s claims procedures, with no benefit carry-over, and employees on any type of long-term leave of absence will be ineligible for reimbursement until they return to full duty status.

.

B. Required Licenses.

1. Employees are responsible for meeting the requirements and for paying any fees involved in obtaining necessary licenses, certificates, permits, and registrations. However, where such licenses, certificates, permits, and registrations are required in order for the employee to maintain his/her current position, reimbursement may be sought from his/her employer upon proof of successful completion of tests or other requirements. Department heads are responsible for informing their employees that their duties require them to obtain such licenses, etc., and for seeing that their employees obtain the licenses. Department heads should make available relevant information regarding applications, fees, and qualifications for licenses required by positions within their department.

C. Layoffs.

1. Layoffs in non-general fund Departments shall be contained within those Departments with no right for laid off employees to bump outside the Departments.

D. Partial Day Absences

1. In recognition of the extended hours often worked by employees who are exempt from the overtime provisions of the Fair Labor Standards Act ("FLSK) and at the sole discretion of the Appointing Authority (or Assistant in the Appointing Authority's absence), FLSA Exempt employees may be granted partial day absences without charging such absences to an appropriate leave balance subject to the following limitations:

    a. Partial day absences which would otherwise be charged to Sick Leave, including Family-Sick Leave, shall be charged to Sick Leave.

    b. If an employee has been placed on a Performance Improvement Plan or is the subject of a Coaching Memorandum related to attendance issues, partial day absences shall be charged to the appropriate leave balance.

ARTICLE XI
SAVINGS

If any provision of this Agreement should be held invalid by operation of law or by tribunal of competent jurisdiction, or if compliance with or enforcement of such provision shall be restrained by such tribunal, the remainder of the Agreement shall remain in full force and effect.

ARTICLE XII
PERSONNEL RULES

Upon implementation of this Agreement, any terms and conditions of employment not specifically discussed herein shall be governed by the provisions of the Colusa County Code Personnel Rules.

DRAFT

ARTICLE XIII
FULL UNDERSTANDING

This Agreement constitutes the full understanding of the parties with respect to the matters set forth herein. The parties further agree that any amendment to this Agreement during the term of the Agreement must be reduced to writing and may be done only by mutual consent of the parties.

ARTICLE XIV
TERM

This Agreement shall remain in full force and effect from October 1, 2025, through and including September 30, 2027 provided that the County and/or the CCEA shall have the right to reopen negotiations limited to discussions regarding salary increases and lump sum payments, only, no later than September 1, 2026.

Dated: _____
Colusa County Employee Association

_____
Ann Nordyke
President

Dated: _____
County of Colusa

_____
Daurice Kalfsbeek-Smith
Chair of the Board

ATTEST: Marcos Kropf, Interim Clerk to the Board of Supervisors

_____
Patricia Rodriguez, Deputy Clerk

_____
Madison Williams
CCEA Chief Negotiator

_____
Dar Rhodes
HR Director / County Chief Negotiator

DRAFT

MEMORANDUM OF UNDERSTANDING

Between

THE COUNTY OF COLUSA

And

THE COLUSA COUNTY EMPLOYEES' ASSOCIATION
(Miscellaneous Bargaining Unit)

DRAFT

TERM
October 1, 2025 – September 30, 2027

TABLE OF CONTENTS

PREAMBLE 4

ARTICLE I – RECOGNITION 4

ARTICLE II – CCEA RIGHTS

A. CCEA Rights 4
B. Fair Share Agreement 4
C. Public Employee Communication 5
D. Attendance at Board of Supervisors' Meetings 6
E. Association Leave Bank 6

ARTICLE III – MANAGEMENT RIGHTS 7

ARTICLE IV – GENERAL PROVISIONS

A. Strikes and Lockouts 7
B. No Reprisals 7

ARTICLE V – SALARIES

A. Salaries 7
B. Night Differential Pay 8
C. Bilingual Pay 8
D. Emergency Standby Pay and Call Back Pay 8
E. Overtime 9
F. Temporary Promotions (Temporary Upgrade Pay) 9
G. Out of Class Assignments 10
H. Agricultural Equipment Operator Assignments 10
I. Inpatient Interventionist Assignments 10
J. Migrant Center's Caretaker Assignments 11
K. Compensation for Chaperones Working 24-Hour Schedule 11

ARTICLE VI – HOLIDAYS

A. Holidays 12
B. Floating Holiday 13
C. Newly Declared Federal Holidays 13
D. Holiday Compensation 13

ARTICLE VII – LEAVES

A. Vacation 14
B. Sick Leave 15
C. Bereavement Leave 16
D. Jury Duty or Court Witness 16
E. Education Leave 16
F. All Leaves Recognized by Law 16

DRAFT

TABLE OF CONTENTS (*Continued*)

ARTICLE VIII – HEALTH AND WELFARE

A. Medical Insurance 17
B. Dental Insurance 17
C. Cafeteria Plan 18
D. Medical-In-Lieu 18
E. Part Time Employees 19
F. Vision Care and Employee Assistance Programs 19
G. Health Reimbursement Arrangement 19
H. Employee Wellness Program 20
I. Health Care Compliance 20

ARTICLE IX – RETIREMENT

A. Retirement Plan 20
1. CalPERS Retirement Benefits 20
2. Retirement Contributions 21
B. Internal Revenue Code Section 457 Deferred Compensation Plans 21

ARTICLE X – MISCELLANEOUS

A. Personal Protective Equipment 22
B. Required Licenses 22
C. Layoffs 22

ARTICLE XI – SAVINGS 22

ARTICLE XII – PERSONNEL RULES 23

ARTICLE XIII – FULL UNDERSTANDING 23

ARTICLE XIV – TERM 23

SIGNATURES 23

DRAFT

PREAMBLE

This Memorandum of Understanding ("MOU" or "Agreement") is entered into by and between the County of Colusa ("County") and the Colusa County Employees Association ("CCEA" or "Association") and sets forth the wages, benefits, hours of work, and other terms and conditions of employment for County employees assigned to the Miscellaneous Bargaining Unit.

ARTICLE I
RECOGNITION

Pursuant to Government Code Section 3500, et seq. and applicable provisions of the Colusa County Personnel Rules, the County recognizes the CCEA as the exclusive representative for all County employees assigned to the Miscellaneous Bargaining Unit.

ARTICLE II
CCEA RIGHTS

A. CCEA Rights

1. CCEA shall have all rights and privileges provided by the United States Constitution, the California State Constitution, Federal law, California State law, and the Colusa County Personnel Rules.

B. Dues Deduction

1. The County shall deduct CCEA membership dues and any other agreed-upon payroll deductions to the extent permitted by law from the monthly pay of each bargaining unit employee in accordance with the procedures set forth herein.

    a. Dues paying bargaining unit employees who have affirmatively consented to or authorized dues deductions shall be entitled to have dues deducted upon signing and filing with CCEA an authorization form provided by Association. CCEA will notify the County of the employee's name and the amount of dues to be withheld. The dues deduction form currently in use may continue to be utilized by CCEA.

    b. The County agrees to direct each bargaining unit employee to CCEA in response to any questions or concerns about dues or any other mutually agreed payroll deduction.

    c. CCEA is responsible for providing the County with timely information about changes to employee dues and any other lawful CCEA-related payroll deductions.

    d. Dues withheld by the County shall be transmitted monthly to the CCEA officer designated in writing by the Association as the person authorized to receive the funds at the address specified.

    e. A bargaining unit employee's earnings must be regularly sufficient after other legal and required deductions are made to cover the amount of the authorized CCEA dues deductions. If a bargaining unit employee is in a non-pay status during only part of the pay period and the salary is not sufficient to cover the full withholding, no deduction shall be made.

f. CCEA shall refund to the County any amounts paid to it in error upon presentation of supporting evidence. The County will deduct and remit to CCEA any amounts which were not deducted in accordance with the procedures prescribed herein.

2. The County shall make payroll deductions in reliance on CCEA's certification that the Association has and will maintain an authorization signed by each employee who affirmatively consents to pay CCEA membership dues. Similarly, the County shall only cancel or modify membership dues or any other mutually agreed payroll deduction for any bargaining unit employee in reliance on information provided by CCEA to the extent permitted by law.

3. The County shall not request that CCEA provide a copy of any bargaining unit employee's authorization unless a dispute arises about the existence or terms of the authorization.

4. CCEA shall indemnify, defend, protect and hold harmless the County and its elected and appointed officials, officers, employees, officers and agents from and against any and all claims, liabilities, losses, damages, fines, penalties, claims, demands, suits, actions, causes of action, judgments, costs and expenses arising from the application of this section, including, but not limited to, any claims made by bargaining unit employees for the return of membership dues deducted by the County in reliance on CCEA's certification, and any claims made by any bargaining unit employees for any deduction cancellation or modification the County made in reliance on the information provided by CCEA.

C. Public Employee Communication

1. This provision applies to all new employees hired into CCEA bargaining unit positions and is intended to comply with the provisions of Government Code, sections 3555 et seq.

   a. The County will provide CCEA with not less than ten (10) calendar days' advance written notice of the time, date and location of all new employee orientation meetings, unless an urgent and unforeseeable need for a new employee orientation meeting precludes the County from providing CCEA with ten (10) calendar days' advance notice. The advance notice will include the number of CCEA bargaining unit employees attending the orientation meetings. Notice will be made by way of email to the CCEA President or another contact person designated by CCEA.

   b. Upon request, CCEA will be given up to ten (10) minutes as part of the new employee orientation meetings to present information to bargaining unit employees generally relating to CCEA's role as representative, CCEA membership information, the rights and obligations created by the MOU and County personnel rules, and to answer questions. One (1) CCEA representative may present information to the new employees. Management representative shall excuse themselves and not be present during CCEA's portion of the new employee orientation meetings.

   c. The CCEA representative who present information at the new employee orientation meetings may do so while on duty without the loss of compensation, provided CCEA advises the Human Resources Director of the names of the employees who will be presenting information on behalf of CCEA at the new employee orientation meetings.

   d. The County shall not disclose the date/time/place of the new employee orientation to anyone other than the new employees and their departments, CCEA, and any vendors who are contracted to provide a service at the new employee orientation.

2. Information Requirements – The County will provide CCEA with a digital file via email to the email address designated by CCEA containing the following information for each employee to the extent the County has the information on file:

   - Name
   - Job title
   - Work location
   - Personal telephone number (may be home or cellular as provided by employee)
   - Home address
   - Personal email addresses if provided by the employee and on file with the County (new hires only) unless the employee submits a written request to the County and CCEA to withhold disclosure of his/her personal email address

   The above information will be provided on a monthly basis, except that the County is not required to provide personal telephone numbers, home addresses or personal email addresses unless requested by CCEA.

D. Attendance at Board of Supervisors' Meetings

1. A maximum of two (2) CCEA representatives may simultaneously attend any and all Board of Supervisors meetings on County time including budget hearings. The names of CCEA representatives who are authorized to attend Board of Supervisors meetings on County time must be provided to the Human Resources Director on or before July 1 of each year. Any combination of two (2) authorized CCEA representatives may attend the meetings at any given time.

E. Association Leave Bank

1. Commencing on October 1, 2025, and each October 1 thereafter, the County shall contribute twenty-four (24) hours per contract year to a CCEA Association Leave Bank to be used by designated CCEA representatives to conduct representational duties on behalf of bargaining unit members, excluding activities directly related to negotiations. Designated CCEA representatives who utilize Association Leave Bank hours shall not suffer a loss of compensation or other benefits. Unused hours shall not roll over from year to year and have no cash-out value.
2. **Request and Notification:** Union Representatives shall request Association Leave Bank time from their immediate supervisor in advance whenever possible, with a courtesy copy to the HR Director. Requests shall state the date and anticipated start/end time and note "Union representational duties." No employee names or confidential details are required.
3. **Tracking:** The HR Department shall track Association Leave Bank usage and provide quarterly usage reports to the Union upon request.
4. **Designated Representatives:** The Union shall annually provide the County with a list of designated representatives authorized to use Association Leave Bank time. Only those listed may access the Bank.
5. **Additional Time:** Any time used beyond the annual allotment shall be unpaid unless otherwise approved in writing by the County.

DRAFT

ARTICLE III
MANAGEMENT RIGHTS

Except as specifically limited by the terms of this MOU, the County, through its Board of Supervisors, shall have all management rights provided by the United States Constitution, the California State Constitution, California State Law, and Colusa County Personnel Rules.

ARTICLE IV
GENERAL PROVISIONS

A. Strikes and Lockouts

1. The CCEA agrees that during the term of this Agreement, neither it nor its officers, agents or members will engage in, encourage, sanction, support or suggest any strikes, work stoppages, slowdowns, or any other similar actions which would involve suspension of, or interference with, the normal work of the County.

2. The County will not lockout employees during the term of this Agreement.

B. No Reprisals

1. The County shall not interfere with or discriminate against any employee by reason of his or her membership in the CCEA or activity approved by this Agreement, nor will the County discourage membership in the CCEA or encourage membership in any other employee organization.

2. The CCEA recognizes its responsibility as the exclusive representative and agrees to represent all employees without discrimination, interference, restraint or coercion.

ARTICLE V
SALARIES

A. Salaries

1. **One-time Lump Sum Payment**: In lieu of a Cost-of-Living (COLA) adjustment in 2025 and 2026, members shall receive the following one-time lump sum payment to be issued no later than 30 days from the acceptance of the negotiated package:
   - Employees with at least 12 months of service with the County shall receive a lump sum payment of $1,500.
   - Employees with less than one year of service with the County shall receive a lump sum payment of $750.

   The parties agree that these are one-time payments which do not meet the definition of compensation earnable nor does it qualify as any applicable special compensation for CalPERS reporting purposes. The County will issue this payment as a separate check from normal wages.

2. **Re-Opener Clause**: The County and CCEA shall agree to reopen negotiations limited to discussions regarding salary increases and lump sum payments only no later than September 1, 2026.

DRAFT

3. **Me-too Clause**: If during the term of this Memorandum of Understanding, the County grants any across-the-board or other uniform wage/salary increase (excluding regularly scheduled step increases, pre-existing contractually mandated increases, or any other legally mandated salary increase) to any employee or defined class of employees, including but not limited to employees of all recognized bargaining units, the County will grant the same wage/salary increase for all represented employees covered by this MOU on the same date, unless the wage/salary increase was granted in exchange for a reduction to a current benefit. For purposes of this provision, an across the board or uniform wage/salary increases includes any increases granted as percentages of existing wages/salaries, fixed dollar amounts, formula-based increase and tiered increases within identifiable employee classifications and groups, but excludes reclassifications and salary range adjustments for individual classifications.

B. Night Differential Pay

1. For employees covered by this Agreement, Night Differential Pay, which may be provided pursuant to Personnel Rule 1.107.1(k), is $1.50 per hour provided that employees called into work shall not be eligible for night differential pay.

Per Personnel Rule 1.107.1(k) Any County employee who performs the majority of his/her regular shift between the hours of four p.m. and eight a.m. (including but not limited to peace officers at the Sheriff's Department, road department equipment service workers, custodians, and library staff) shall receive additional compensation per shift.

C. Bilingual Pay

1. Bilingual Pay shall be paid to those qualified employees in positions where the County receives a benefit from the employee's ability in the second language. Effective December 1, 2025, qualified employees will receive bilingual pay based on their level of proficiency. Level I (speaking only) will be eligible for $80 per month and Level II (speaking, reading & writing) will be eligible for $100 per month.

2. The determination of County benefit shall be based on the Department Head's recommendation and approval of the Human Resources Director provided that such approval shall not be unreasonably withheld. Qualification shall be based on passing an approved language proficiency test modeled on the CHP proficiency test ("Test") and demonstrated proficiency in speaking, understanding, writing and reading the language.

Employees currently receiving bilingual pay will be placed in a tier based on current test scores. If the original test is not available, an assessment will need to be completed; the employee will remain at Level I until the assessment takes place. For employees whose assessment cannot be completed by December 1, 2025, any resulting adjustment in pay will be retroactive to December 1, 2025 for those employees only.

D. Emergency Standby Pay and Call Back Pay

3. Emergency Standby Pay of $25.00 per day shall be paid to employees required to be available outside their normal work hours on a standby basis for "emergency work" whether or not called

DRAFT

back to work. For purposes of this section, emergency work is work that must be performed in response to an unforeseen sudden event which requires immediate response to prevent, mitigate or eliminate a substantial hazard to life, health, or property.

Employees on emergency standby who are called back to perform emergency work shall be paid for all hours worked at 1.5 times their regular hourly rate of pay or equivalent compensatory time off (CTO) with a guaranteed minimum of two (2) hours; except on holidays the rate of 1.5 times the employee's regular hourly pay rate shall be paid in addition to the paid holiday.

4. Call Back Pay: Employees who are not on emergency standby but are called back to work outside their regularly scheduled work hours to perform approved work, shall be paid for all hours over forty (40) called back to work at 1.5 times their regular hourly rate of pay or equivalent CTO with a guaranteed minimum of two (2) hours. Employees who are called back on holidays shall receive call back pay in addition to holiday pay pursuant to Article VI paragraph C.

   a. Notwithstanding the above, Public Works Department employees receive 1.5 times their regular rate of pay for all hours worked during a call back relating to road emergencies with a two (2) hour minimum.

E. Overtime

1. Overtime for employees covered by this Agreement shall be as specified in Colusa County Personnel Rules 1.107.1 Sections "l" through "t", except as follows:

   a. Hours worked in excess of 40 hours per week shall be compensated at the employee's election either at the rate of 1.5 times the employee's regular hourly rate of pay or as compensatory time off ("CTO") calculated at the rate of 1.5 times the number of overtime hours worked provided:

      1) CTO hours may be accumulated to a maximum of 80 hours at any given time and may be taken, with the advance approval of the employee's supervisor, as paid time off during the same calendar year in which they are accumulated;

      2) CTO hours are paid at an employee's regular rate of pay at the time the CTO is paid out;

      3) All accumulated CTO hours will be utilized or cashed out no later than December 31 of each year; and

      4) All accumulated CTO hours will be cashed out upon separation from County employment.

F. Temporary Promotions (Temporary Upgrade Pay)

1. When a position becomes vacant and there is a need to fill the vacant position pending recruitment for a permanent appointment, the appointing authority may request the Human Resources Director authorize a temporary promotion of a regular full or part-time employee from a lower level job class that is directly related to the vacant position.

   For purposes of this section, "vacant position" does not refer to a position that is temporarily available due to an employee's leave of absence.

DRAFT

2. The temporarily promoted employee shall meet the minimum qualifications for the higher-level job class as determined by the Human Resources Director. Employees serving a temporary promotion may apply for regular promotion to fill the permanent vacancy.

3. Temporary promotions provided under this section will comply with California Government Code section 20480, described in CalPERS Circular Letter 200-021-18. Incumbents must be relieved of all duties of their former position in a temporary promotion. Temporary promotions must not exceed 960 hours in each fiscal year. The additional compensation paid to employees serving in a temporary promotion will be reported to CalPERS as temporary upgrade pay.

4. Any regular employee who is temporarily promoted under this section, will receive an increase in pay beginning with the first day of the temporary promotion. Increases in pay related to temporary promotion are calculated in the same manner as a regular promotion.

5. Upon termination of a temporary promotion, the temporarily promoted employee shall be restored to their prior permanent position as if the employee had never left. Employees who are temporarily promoted pursuant to this section and are also eligible for a merit increase in their permanent job classification shall be eligible for the merit increase while serving in the temporary promotion and their temporary promotional pay shall be adjusted to reflect the merit increase, if granted.

6. In the event a temporarily promoted employee receives a regular promotion to the vacant position without any lapse in time between the temporary promotion and the regular promotion, the employee's, time from the first day of temporary promotion shall count as service in the higher-level position for purposes of merit advancement in the higher salary range.

G. Out of Class Assignments

An employee may be requested to perform an out of class assignment for a limited duration. Employees assigned to perform clearly established duties of a higher-level position or classification shall receive out of class pay equal to 5% of their base pay for each day they perform the higher-level duties. Employees are not required to assume all duties of the higher-level position or classification to receive out of class pay. Out of class pay pursuant to this section is not reportable to CalPERS and is not considered as part of the CalPERS retirement benefit calculation.

H. Agricultural Equipment Operator Assignments

Employees within the Department of Agriculture who are routinely and consistently assigned to operate or drive specialized agricultural equipment or vehicles requiring a Class B driver's license, shall receive special assignment pay equal to 5% of their base pay for the working pay period the assignment was performed.

I. Inpatient Interventionist Assignments

Employees shall receive an enhanced standby incentive pay when voluntarily accepting a shift for Inpatient Interventionist.

Standby pay of $25 per 8-hour shift will be paid to employees within the Behavioral Health Department who are offered and accept, on a rotational basis, patient crisis sitter or patient driver shifts, which require these employees to be available outside their normal work hours on a standby basis for emergency work, whether or not called in to work. If called back to perform emergency work, employees shall be paid for all hours worked at 1.5 times their regular hourly rate of pay or

equivalent compensatory time off (CTO) with a guaranteed minimum of two (2) hours, except on holidays, the rate of 1.5 times their regular hourly pay rate shall be paid in addition to the holiday.

Crisis Sitter shifts are available for the following BHS classification: therapists, mental health specialists, case managers, family specialists and peer specialists. Driver shifts are available for all permanent status BHS employees with a valid CA driver's license. No employee may accept shifts that will cause the employee to work a 7-day work week.

J. Migrant Center's Caretaker Assignments

Employees in the classification of Migrant Center Caretaker I/II are required as a condition of employment to live onsite in County provided housing as their permanent year-round residence in order to perform the duties of their position. Therefore, the Parties agree as follows:

The County, solely for its convenience, shall provide housing to employees within the Department of Agriculture, Migrant Center, assigned to the position of Caretaker I/II The value of such housing shall have no impact on the employee's compensation and shall be excluded from gross income consistent with IRS regulation section 1.119-I(b).

Specifics regarding housing are:

1) The County will provide rent-free housing with power, gas, garbage and water included.
2) Management will perform annual inspections on the interior and exterior of houses.
3) Caretakers must follow the same rules as the residents including, no pets, no public drinking, and no vending.
4) Caretakers agree to vacate the house within 30 days of the last day of employment with the County.
5) No permanent changes (remodeling) can be made to the house.
6) All repairs must be reported and approved by management.
7) No permanent structures may be built on the exterior of the house or in the yard.
8) Each Caretaker residence will have two (2) reserved parking spots nearest to their house.
9) Caretakers are not allowed to rent out rooms in their houses.

K. Compensation for Chaperones Working 24-Hour Schedule

This provision is to address compensation for employees serving as chaperones and working a 24-hour schedule. During each 24-hour workday, employees will be allowed a six (6) hour sleep period commencing at 11:30 PM and ending at 5:30 AM the following morning ("sleep time window"). If the employee receives at least five (5) consecutive hours of uninterrupted sleep during the sleep time window (defined as not performing the duties of a chaperone or performing other work-related business required by the County), the six (6) hour sleep time shall be excluded from hours worked during the 24-hour work day and the employee will be compensated for 18 hours of work.

If, however, the employee is required to perform the duties of a chaperone or other work-related business during the sleep time window period, all time spent performing such work shall be considered additional hours worked. In the event the employee cannot get at least five (5) hours of uninterrupted sleep during the sleep time window period, the entire six (6) hour sleep time shall be regarded as hours worked.

DRAFT

ARTICLE VI
HOLIDAYS

A. Holidays

1. Employees covered by this Agreement are entitled to the paid holidays listed below and specified in section 1.108.2(f) of the Colusa County Personnel Rules, which shall be considered to fall on the day-of-the-week designated as the day of celebration by the Board, unless they work in which case paragraph "D" below controls.

2. To take time off work for holidays or be compensated, the County recognizes the following holidays:

- January 1st, known as "New Year's Day."
- The third Monday in January, known as "Martin Luther King, Jr. Day."
- February 12th, known as "Lincoln Day."
- The third Monday in February, known as "Presidents' Day."
- March 31st, known as "Cesar Chavez Day."
- The last Monday in May, known as "Memorial Day."
- **June 19th, known as "Juneteenth"**
- July 4th, known as "Independence Day."
- The first Monday in September, known as "Labor Day."
- The second Monday in October, known as "Columbus Day."
- November 11th, known as "Veterans Day."
- The fourth Thursday of November, known as "Thanksgiving Day."
- The day after Thanksgiving.
- **December 24th, known as "Christmas Eve."**
- December 25th, known as "Christmas Day."
- Every day appointed by the President **(see Section C below)** or Governor as a day free of work including but not limited to a national day of mourning, thanksgiving, or other day no matter how designated of national or statewide significance unless otherwise decided by the Board.

a. If any of the holidays recognized by the county falls on a Saturday, the preceding Friday will be a holiday.

b. If any of the holidays falls on a Sunday, the following Monday will be a holiday.

DRAFT

B. Floating Holiday

1. Employees covered by this Agreement may each fiscal year select one floating holiday not identified above.

C. Newly Declared Federal Holidays

1. Effective October 1, 2025, the County will recognize newly declared single-occurrence federal observances, commemorative days, or national moments of remembrance that are not designated as recurring federal holidays established by an act of Congress or Presidential proclamation, provided the holiday is not designated as a permanent, recurring federal holiday observed, nationally. Permanent, recurring federal holidays must be bargained.

   The County will provide employees the day off with pay in observance of any such newly declared federal observances, under the following conditions:

   1. **Scope**: This provision applies only to federal holidays declared after September 30, 2025. It does not apply retroactively to holidays declared or observed prior to this date.
   2. **Holiday Scheduling**: The recognized single-occurrence federal observance, commemorative day, or national moment of remembrance that are not designated as recurring federal holidays will be observed in the same manner as other fixed-date or floating holidays already recognized by the County.
   3. **Board Approval**: In recognition that federally declared observances, commemorative days, or national moments of remembrance are frequently announced with minimal advance notice, such declarations shall be deemed to carry the implicit approval of the Board of Supervisors, and no additional Board action shall be required.

D. Holiday Compensation

1. Employees who work on any of the holidays listed above and specified in section 1.108.2(f)of the Colusa County Personnel Rules shall be paid as their full compensation for working on a holiday two (2) times their regular hourly rate for each hour worked with no additional pay for the holiday. This section does not apply to employees on standby who are called in to work in an emergency situation whose pay rate is governed by Article V Paragraph E of this Agreement.

2. If a holiday falls on a Saturday or Sunday and either day is part of an employee's scheduled workweek, the employee will receive his regular rate of pay and the day shall be counted as a regular workday.

3. If an employee resigns and the last day worked is the day before a holiday, the employee will not be paid for the holiday.

4. Temporary, extra help, limited term and seasonal employees required to work on a holiday shall be paid the regular rate of pay established for their positions.

5. If an employee is on a leave of absence without pay, the employee will not be paid for holidays except as required by law.

ARTICLE VII
LEAVES

A. Vacation

DRAFT

1. Employees covered by this Agreement are entitled to Vacation Leave with pay as provided in section 1.108.2(a) et seq. of the Colusa County Personnel Rules.

   1) The County vacation leave with pay plan functions under an accrual and usage plan (the plan). Under the plan, vacation will be earned and credited on a monthly-basis

   2) Employees are encouraged and expected to use all vacation in the year in which credited;

   3) Vacation shall be used in no less than fifteen-minute increments;

      a) Only accrued leave can be used. If there is no leave on the books, it cannot be used.

   4) Vacation must be scheduled in advance, subject to pre-approval by the employee's supervisor;

   5) Appointing authorities are charged with actively managing the vacation usage of their employees, to ensure vacation is used in accordance with this section;

   6) Vacation shall accrue on an hourly basis, based on an employee's anniversary date. An employee may accumulate a maximum of 1.5 times their annual accrual. An employee who accumulates vacation in excess of the maximum allowable hours will stop accruing vacation until their accumulated vacation hours fall below the maximum allowed.

   7) Vacation shall accrue and may be accumulated at the following rates:

Time in Service	Annual Vacation	Monthly Accrual 37.5-hour week	Monthly Accrual 40-hour week	Maximum Accumulation 37.5-hour week	Maximum Accumulation 40-hour week
0 through 3 yrs.	0 – 10 days	6.25 hours	6.666 hours	112.50 hours	120.00 hours
4 through 7 yrs.	15 days	9.375 hours	10.000 hours	168.75 hours	180.00 hours
8 through 11 yrs.	20 days	12.500 hours	13.333 hours	225.00 hours	240.00 hours
12+ yrs.	25 days	15.625 hours	16.666 hours	281.25 hours	300.00 hours

   8) Vacation hours accumulated by an employee before January 1, 2009, will be carried forward in a separate employee vacation account, which may be referenced as the "pre-2009 vacation account," subject to the following:

      a) Effective January 1, 2014, the value of each vacation hour included in an employee's pre-2009 vacation account will be calculated at the employee's current hourly rate of pay and will be frozen at that amount.

      b) If, subsequent to January 1, 2014, an employee takes vacation-time off using vacation hours credited to the pre-2009 vacation account, they will be granted vacation time off on an hour-for-hour basis, without regard for their current rate of pay.

   9) Legal holidays occurring during vacation leave will not be charged as vacation leave but as a holiday;

   10) Employees may request conversion into cash payments of up to forty (40) hours of accrued vacation not more than once in a fiscal year. Employees may also elect such cash conversion to be deposited into a deferred compensation account in the employee's name. Employees must retain a minimum of forty (40) hours in their leave bank to make a conversion request.

   11) Part-time employees shall accrue and may accumulate vacation leave on a pro-rata basis equal to their prorated service time and their prorated hours worked;

DRAFT

12) Upon termination, the employee or their estate will be paid the monetary value of the earned unused vacation in the employee's vacation account.

13) Starting from the first complete pay period after October 1, 2023, all employees will be able to include their previous public service experience for calculating vacation accrual. Verifiable experience is counted in complete years (equivalent to twelve [12] months). Each employee shall be credited for the purpose of accrual, with years of service at other public agencies on a year for year basis. The maximum vacation allowance will correspondingly align with the updated years of service for vacation.

B. Sick Leave

1. Employees covered by this Agreement are entitled to accrue, accumulate and use Sick Leave with pay as provided in section 1.108.2(b)et seq. of the Colusa County Personnel Rules except as follows:
   a. Effective January 1, 2017, each County employee who separates from County service will be compensated for unused sick leave based on the formula specified in section 1.108.2(b), subsection 6 et seq. except that:

      i. Employees who separate from County service for any reason with unused sick leave that was accrued and accumulated before December 31, 2009 may choose to receive the entire amount owed in cash pursuant to §1.108.2(b)(6) et seq. or may choose to have the entire amount owed deposited into a county offered IRC 457 Plan subject to the limitations of such Plan.

   b. Effective January 1, 2017, employees who retire from County service with unused sick leave that was accrued and accumulated after December 31, 2009 will be compensated based on the formula and conditions which follow:

      i. An employee who retires with at least 15 years of Colusa County service and a minimum combined (old bank plus new bank) sick leave balance of 200 hours at the time of retirement will receive an amount equal to twenty-five percent (25%) of his/her current base hourly salary for all qualified hours.

      ii. An employee who retires with at least 20 years of Colusa County service and a minimum combined (old bank plus new bank) sick leave balance of 250 hours at the time of retirement will receive an amount equal to fifty percent (50%) of his/her current base hourly salary for all qualified hours.

      iii. An employee who retires with at least 25 years of Colusa County service and a minimum combined (old bank plus new bank) sick leave balance of 300 hours at the time of retirement will receive an amount equal to seventy-five percent (75%) of his/her current base hourly salary for all qualified hours.

      iv. An employee who retires with at least 30 years of Colusa County service and a minimum combined (old bank plus new bank) sick leave balance of 350 hours at the time of retirement will receive an amount equal to one hundred percent (100%) of his/her current base hourly salary for all qualified hours.

      v. Employees who are compensated for unused sick leave pursuant to paragraphs b-i through b-iv above may have any amount owed deposited into a County offered IRC 457 Deferred Compensation Plan subject to the limitations of such plan and/or to have any amount owed

deposited into the County-sponsored Health Reimbursement Arrangement subject to the limitations of the HRA plan document.

1. For the purposes of this benefit only, County employees who are elected to a County office will be compensated as though they had "retired" effective the date they assume the County elected office.

C. Bereavement Leave

1. Bereavement leave will be granted in the case of death in the immediate family of the employee or spouse pursuant to Colusa County Personnel Rules 1.108.2(d).

D. Jury Duty or Court Witness

1. Employees who are required to serve on jury duty shall receive full pay, but shall remit to the County any compensation, except reimbursement for parking, meals, mileage or lodging which may be received for such service.
2. An employee who is required to appear as a witness in a court case which involves the County or County business shall receive full pay, but shall remit to the County any witness fees, including fees received as an expert witness, except reimbursement for parking, meals, mileage or lodging which may be received for such service.

E. Education Leave

1. Upon the recommendation of the department head, the Board of Supervisors may grant an employee up to nine (9) months of educational leave without pay. The department head shall consider the following criteria in making recommendation to the Board to grant educational leave: Whether

a. Education or training will increase on-the-job skills; and

b. Education or training will increase the employee's qualifications for promotion; and

c. The employee indicates a desire to make County employment a career; and

d. The employee has demonstrated high motivation for self-improvement; and

e. The employee has shown indications of superior work performance in present position; and

f. The employee has shown evidence of promotional potential indicating the capacity to perform in a more responsible position; and

g. The employee has shown potential, motivation and suitability for further educational opportunity.

F. All Leaves Recognized By Law

Employees covered by this Agreement may take any leave recognized by law.

1. Employees covered by this Agreement, solely at their option, may elect to retain up to forty (40) hours of accrued vacation leave while on a Medical and Family Leave lasting longer than three (3) days and be placed in leave without pay status prior to exhausting all accrued

DRAFT

vacation leave. Unless the employee notifies the County of the election to retain vacation leave at the time of Medical and Family Leave, all paid leave will run concurrently for the entire Medical and Family Leave and must be exhausted prior to leave without pay. The County's Medical and Family Leave Policy (Policy #308) and ~~Personnel Rule~~§1.108 of the Colusa County Personnel Rules shall be interpreted and applied in a manner consistent with this provision.

ARTICLE VIII
HEALTH AND WELFARE

The County provides the health and welfare benefits identified in the Colusa County Personnel Rules to all bargaining unit employees subject to the terms which follow:

A. Medical Insurance

1. Except as provided in Section H, below the County will continue to contract with the Public Employees' Retirement System (CalPERS) for the purpose of providing medical insurance benefits for active employees in accordance with the Public Employees Medical and Hospital Care Act (PEMHCA) and eligible retired employees. Eligibility of active and retired employees and the dependents of active and retired employees to participate in this program shall be in accordance with regulations promulgated by CalPERS.

2. Pursuant to Government Code Section 22892 (a) the County will contribute the statutory minimum employer contribution (MEC) on behalf of each active employee and each retiree who subscribes for coverage.

3. Except as provided herein, represented employees shall purchase medical insurance through the CalPERS Medical Program.

    a. Represented employees who have alternative medical insurance coverage from another source, which provides "Minimum Essential Coverage" as that term is defined by the agencies responsible for the administration of the Affordable Care Act, may, by providing written proof of such alternative coverage to the County, opt out of the CalPERS Medical Program. Employees who opt out of the CalPERS Medical Program shall be required to provide written confirmation of alternative Minimum Essential Coverage annually thereafter, during the CalPERS open enrollment period. If such confirmation is not provided, the employee shall be required to enroll in the CalPERS Medical Program.

B. Dental Insurance

1. The County will continue to make dental insurance available to active employees and their eligible dependents of active employees through the County sponsored dental plan(s). The County's contributions toward such dental insurance shall be capped at $45.00 per month.

2. Except as provided herein, represented employees shall be required to purchase dental insurance through the County sponsored plan. Represented employees who have dental insurance coverage from another source may, by providing written proof of such alternative coverage to the County, opt out of the dental plan. Employees who opt out of the dental plan

shall be required to provide written confirmation of alternative coverage annually thereafter, during the dental plan open enrollment period. If such confirmation is not provided, the employee shall be required to enroll in the dental plan.

a. Employees who were hired prior to January 1, 2013 and who opt out of the dental plan pursuant to Section B.2. above, shall be provided a $45.00 per month cash-in-lieu benefit which the employee may deposit into an appropriate account within the County Cafeteria Plan or may be taken as a cash payment that will be applied to the employee's monthly paycheck. Amounts taken as cash will be treated as taxable income.

C. Cafeteria Plan

1. The County provides a Cafeteria Plan available to all represented employees. At a minimum, the County Cafeteria Plan provides non-elective County contributions that may be used to pay all or a portion of the monthly premium for county-sponsored group health insurance, and the pre-tax payments of the employee share of county-sponsored group health insurance premiums. The County Cafeteria Plan also includes a Flexible Spending Account, a Health Reimbursement Account, and a Dependent Care Account into which employees may make pre-tax contributions through the execution of Salary Reduction Agreements. Participation in the County Cafeteria Plan shall be pursuant to the terms, conditions and restrictions of the Plan Administrator and shall be subject to the terms that follow.

a. Effective December 1, 2025 and each December 1st thereafter, the County will make non-elective contributions into the Cafeteria Plan on behalf of each represented employee who is enrolled in the CalPERS medical plan pursuant to Section A.3., sufficient that when combined with the MEC totals the following:
   i. For employees who are enrolled in employee only coverage, the County will contribute a dollar amount sufficient that when combined with the MEC is the equivalent of the actual premium, for employee only coverage based upon CalPERS Gold plan.
   ii. For employees who are enrolled in employee plus one coverage, the County will contribute a dollar amount sufficient that when combined with the MEC is the equivalent of the actual premium, for employee plus one coverage based upon CalPERS Gold plan.
   iii. For employees who are enrolled in family coverage, the County will contribute a dollar amount sufficient that when combined with the MEC is the equivalent of the actual premium for family coverage based upon CalPERS Gold plan.

c. In the event an employee has excess County Cafeteria contributions (before or after AFLAC or Colonial), the dollar equivalent thereof shall be contributed to the employee's Health Reimbursement Account (HRA) to the extent allowable by law.

d. Upon expiration of the MOU, County contributions shall remain at the 2027 contribution rates until such time as an alternative agreement is reached or alternative terms are imposed following the exhaustion of impasse and fact-finding procedures, if applicable.

D. Medical In Lieu

1. Subject to Section D.2 below, employees who, pursuant to Section A.3 a, above elect not to receive County-sponsored CalPERS health benefits, the County will provide a monthly In-lieu

benefit which the employee may deposit into an appropriate account within the County Cafeteria Plan or may be taken as a cash payment that will be applied to the employee's monthly paycheck. Amounts taken as cash will be treated as taxable income.

a. Employees hired prior to January 1, 2013 and who qualify for the above-described In-lieu benefit shall receive $715 per month.

b. Employees hired after December 31, 2012 and who qualify for the above-described In-lieu benefit shall receive $333 per month as of January 1, 2024 and $400 per month as of January 1, 2025.

E. Part Time Employees

1. Part time employees regularly scheduled to work twenty (20) or more, but fewer that thirty (30) hours a week will be eligible for the health, dental, vision and Cafeteria Plan benefits appropriate to their hire-date equal to the pro rata relationship between the hours regularly scheduled to work and full time. Benefits for employees who are regularly scheduled to work thirty (30) hours or more per week will not be prorated.

   a. Part time employees regularly scheduled to work twenty (20) hours or more but fewer than thirty (30) hours each week are not required to accept county-sponsored health benefits and are not eligible for cash-in-lieu benefits.

   b. Part time employees regularly scheduled to work thirty (30) hours or more each week are subject to the provisions of Section A.3. above and may be eligible for cash-in-lieu benefits if they satisfy the requirements of Section A.3a.

F. Vision Care and Employee Assistance Plans

1. Vision insurance shall be provided in accordance with the Vision Plan and shall include at a minimum an annual examination and the replacement of lenses and frames every twelve (12) months. The County will contribute one-hundred percent (100%) of the monthly premium for employee-only coverage. Employees may enroll eligible family members at the employee's expense and subject to the rules of the insurance provider.

2. The County shall provide to each represented employee an Employee Assistance Plan that includes up to six (6) visits during each calendar year with a designated Health Care Provider. Such Employee Assistance shall be strictly confidential, and the employee need only show proof of employment with Colusa County to receive this benefit.

G. Health Reimbursement Arrangement

1. The County will make an IRS qualified Health Reimbursement Arrangement (HRA) available for eligible represented employees who retire from the County and enroll in the County-Sponsored Health Plan. Subject to the conditions described below, the County will make monthly contributions into the HRA on behalf of each eligible retiree.

   a. For employees hired before January 1, 2013 and who retired prior to the execution of this MOU, the County will continue to contribute $128.26 per month to the retiree's HRA. This retiree HRA contribution is separate from and in addition to the PEMHCA Minimum Employer Contribution (MEC).

DRAFT

b. For employees hired before January 1, 2013 and who retire following the execution of this MOU, the County will contribute $128.26 per month, less any future increases to the MEC, to the retiree's HRA, so that the combination of the MEC and the retiree HRA contribution does not exceed $267.26 per month. This retiree HRA contribution is separate from the MEC.

c. Employees hired after January 1, 2013 and who subsequently retire are not eligible for the $128.26 retiree HRA contribution provided herein. Such retirees receive only the MEC.

2. Effective October 1, 2025, the County will contribute $75 per month into individual IRS qualified Health Reimbursement Arrangement (HRA) accounts for each active employee. This contribution is in addition to any excess cafeteria funds. Employees will be responsible for any administrative fees associated with their HRA account. Upon retirement the remaining balance of an active employee's HRA will be rolled into the employee's retiree HRA.

H. Employee Wellness Program.

The County will reimburse employees covered by this Agreement for up to 15% of their monthly gym membership fee through the Trindel Insurance program. The County, through the Human Resources Department, will provide information to employees about this program.

I. Health Care Compliance

1. The Parties intend to comply with legislative and regulatory requirements for the provision of health care insurance and benefits. If, during the term of this MOU, it is determined that the County is out of compliance with any health care related mandate or mandates, the County will take the steps necessary to comply with the law.

2. Before taking action pursuant to paragraph 1 above, the County will notify the Association of the issue and the County's intended action. Time permitting and at the request of the Association, County representatives will meet with Association representatives before acting. If the actions deemed necessary to comply with the law impact employee benefits, the County and the Association will meet and confer regarding such impacts.

ARTICLE IX
RETIREMENT

A. Retirement Plans

1. CalPERS Retirement Benefits

a. The County's contract with CalPERS provides the following retirement benefits for bargaining unit employees. CalPERS determines an employee's membership category as classic or new.

1. Tier 1 – Retirement benefits for miscellaneous "classic" members hired prior to December 31, 2012 shall receive the following CalPERS benefits.

- 3% @60 retirement formula
- Single highest year final compensation period

- Employee pays an 8% member contribution

2. Tier 2 – Retirement benefits for miscellaneous "new" members hired on or after January 1, 2013 are as follows:

   - 2% @ age 62 retirement formula
   - Three-year average final compensation period
   - Employee pays 50% of the normal cost as determined by CalPERS

b. To the extent allowable by CalPERS, the County will continue to provide the following optional retirement enhancements:

   - Military Service Credit as Public Service for Miscellaneous and Safety employees pursuant to Government Code Section 21024.

   - Pre-Retirement Option 2W Death Benefit pursuant to Government Code Section 21548.

c. Member's contribution toward retirement costs are paid subject to the provisions of section 414(h)(2) of the Internal Revenue Code.

2. Should the statutory minimum employee member contribution rates for the above retirement plans be increased through State legislative or CalPERS administrative action during the term of this Agreement, either party may request to reopen this section to negotiate possible changes to the employee contribution rates specified in this MOU. Unless required by law, the employee contribution rates specified above will not change during the term of this MOU without mutual agreement of the parties.

B. Internal Revenue Code Section 457 Deferred Compensation Plans

1. The County will continue to make IRC section 457 deferred compensation plans (IRC 457 Plans) available to represented employees, subject to the terms and conditions of plan sponsors which, in some cases, may require minimum employee contributions. Employee participation in such plans is voluntary.

2. Except for the matching contributions provided below, the County shall not make contributions on behalf of represented employees. The County will match employee contributions to a county-offered IRC 457 Plan and, effective October 1, 2025, contribute increased amounts as follows:

   a. For employees with up to seven (7) years of county service, $60.00 per month. To qualify for matching contributions, employees must contribute an amount equal to or greater than the plan minimum contribution.

   b. For employees with seven (7) to fifteen (15) years of county service up to $80.00 per month. To qualify for matching contributions, employees must contribute an amount equal to or greater than the plan minimum contribution.

   c. For employees with more than fifteen (15) years of county service up to $100.00 per month. To qualify for matching contributions, employees must contribute an amount equal to or greater than the plan minimum contribution.

3. Specific information regarding each of the available IRC 457 Plans may be obtained from the Human Resources Department.

ARTICLE X
MISCELLANEOUS

A. Personal Protective Equipment.

1. Employees may be required to wear personal protective equipment, including but not limited to prescription safety eyeglasses, which will be provided by the County at no cost to employees If a Department Head determines that employees are required to wear safety footwear, the County will, on an annual basis, reimburse the employee for the cost of such footwear in annual reimbursements up to $200 for each 12-month period from July 1 to June 30; subject to the County' s claims procedures, with no benefit carry-over, and employees on any type of long-term leave of absence will be ineligible for reimbursement until they return to full duty status.

B. Required Licenses.

1. Employees are responsible for meeting the requirements and for paying any fees involved in obtaining necessary licenses, certificates, permits, and registrations. However, where such licenses, certificates, permits, and registrations are required in order for the employee to maintain his/her current position, reimbursement may be sought from his/her employer upon proof of successful completion of tests or other requirements. Department heads are responsible for informing their employees that their duties require them to obtain such licenses, etc., and for seeing that their employees obtain the licenses. Department heads should make available relevant information regarding applications, fees, and qualifications for licenses required by positions within their department.

C. Layoffs.

1. Layoffs in Merit and non-general fund Departments shall be contained within those Departments with no right for laid off employees to bump outside the Departments.

ARTICLE XI
SAVINGS

If any provision of this Agreement should be held invalid by operation of law or by tribunal of competent jurisdiction, or if compliance with or enforcement of such provision shall be restrained by such tribunal, the remainder of the Agreement shall remain in full force and effect.

ARTICLE XII
PERSONNEL RULES

Upon implementation of this Agreement, any terms and conditions of employment not specifically discussed herein shall be governed by the provisions of the Colusa County Personnel Rules.

DRAFT

ARTICLE XIII
FULL UNDERSTANDING

This Agreement constitutes the full understanding of the parties with respect to the matters set forth herein. The parties further agree that any amendment to this Agreement during the term of the Agreement must be reduced to writing and may be done only by mutual consent of the parties.

ARTICLE XIV
TERM

This Agreement shall remain in full force and effect from October 1, 2025, through and including September 30, 2027 provided that the County and/or the CCEA shall have the right to reopen negotiations limited to discussions regarding salary increases and lump sum payments, only, no later than September 1, 2026.

Dated: _____
Colusa County Employee Association

_____
Ann Nordyke
President

Dated: _____
County of Colusa

_____
Daurice Kalfsbeek-Smith
Chair of the Board

ATTEST: Marcos Kropf, Interim Clerk to the Board of Supervisors

_____
Patricia Rodriguez, Deputy Clerk

_____
Madison Williams
CCEA Chief Negotiator

_____
Dar Rhodes
HR Director / County Chief Negotiator

DRAFT

MEMORANDUM OF UNDERSTANDING

Between

THE COUNTY OF COLUSA

And

THE COLUSA COUNTY EMPLOYEES' ASSOCIATION
(Professional - Administrative Bargaining Unit)

DRAFT

TERM
October 1, 2025 – September 30, 2027

TABLE OF CONTENTS

PREAMBLE 4

ARTICLE I – RECOGNITION 4

ARTICLE II – CCEA RIGHTS

A. CCEA Rights 4
B. Fair Share Agreement 4
C. Public Employee Communication 5
D. Attendance at Board of Supervisors' Meetings 6
E. Association Leave Bank 6

ARTICLE III – MANAGEMENT RIGHTS 7

ARTICLE IV – GENERAL PROVISIONS

A. Strikes and Lockouts 7
B. No Reprisals 7

ARTICLE V – SALARIES

A. Salaries 7
B. Night Differential Pay 8
C. Bilingual Pay 8
D. Emergency Standby Pay and ~~Emergency~~ Call Back Pay 8
E. Overtime 9
F. Time Worked While on Leave 9
G. Temporary Promotions (Temporary Upgrade Pay) 9
H. Out of Class Assignments 10
I. Agricultural Equipment Operator Assignments 10
J. Inpatient Interventionist Assignments 11
K. Compensation for Chaperones Working 24-Hour Schedule 11

ARTICLE VI – HOLIDAYS

A. Holidays 11
B. Floating Holiday 12
C. Newly Declared Federal Holidays 12
D. Holiday Compensation 13

ARTICLE VII – LEAVES

A. Vacation 13
B. Sick Leave 14
C. Bereavement Leave 15
D. Jury Duty or Court Witness 16
E. Education Leave 16
F. All Leaves Recognized by Law 16

DRAFT

TABLE OF CONTENTS (*Continued*)

G. Required Continuing Professional Education Leave 16

ARTICLE VIII – HEALTH AND WELFARE

A. Medical Insurance 17
B. Dental Insurance 17
C. Cafeteria Plan 18
D. Medical-In-Lieu 18
E. Part Time Employees 19
F. Vision Care and Employee Assistance Programs 19
G. Health Reimbursement Arrangement 19
H. Employee Wellness Program 20
I. Health Care Compliance 20

ARTICLE IX – RETIREMENT

A. Retirement Plan 20
1. CalPERS Retirement Benefits 20
2. Retirement Contributions 20
B. Internal Revenue Code Section 457 Deferred Compensation Plans 21

ARTICLE X – MISCELLANEOUS

A. Personal Protective Equipment 22
B. Required Licenses 22
C. Layoffs 22
D. Partial Day Absences 22

ARTICLE XI – SAVINGS 23

ARTICLE XII – PERSONNEL RULES 23

ARTICLE XIII – FULL UNDERSTANDING 23

ARTICLE XIV – TERM 23

SIGNATURES 23

DRAFT

PREAMBLE

This Memorandum of Understanding ("MOU" or "Agreement") is entered into by and between the County of Colusa ("County") and the Colusa County Employees Association ("CCEA" or "Association") and sets forth the wages, benefits, hours of work, and other terms and conditions of employment for County employees assigned to the Professional-Administrative Bargaining Unit.

ARTICLE I
RECOGNITION

Pursuant to Government Code Section 3500, et seq. and applicable provisions of the Colusa County Personnel Rules, the County recognizes the CCEA as the exclusive representative for all County employees assigned to the Professional-Administrative Bargaining Unit.

ARTICLE II
CCEA RIGHTS

A. CCEA Rights

1. CCEA shall have all rights and privileges provided by the United States Constitution, the California State Constitution, Federal law, California State law, and the Colusa County Personnel Rules.

B. Dues Deduction

1. The County shall deduct CCEA membership dues and any other agreed-upon payroll deductions to the extent permitted by law from the monthly pay of each bargaining unit employee in accordance with the procedures set forth herein.

    a. Dues paying bargaining unit employees who have affirmatively consented to or authorized dues deductions shall be entitled to have dues deducted upon signing and filing with CCEA an authorization form provided by Association. CCEA will notify the County of the employee's name and the amount of dues to be withheld. The dues deduction form currently in use may continue to be utilized by CCEA.

    b. The County agrees to direct each bargaining unit employee to CCEA in response to any questions or concerns about dues or any other mutually agreed payroll deduction.

    c. CCEA is responsible for providing the County with timely information about changes to employee dues and any other lawful CCEA-related payroll deductions.

    d. Dues withheld by the County shall be transmitted monthly to the CCEA officer designated in writing by the Association as the person authorized to receive the funds at the address specified.

    e. A bargaining unit employee's earnings must be regularly sufficient after other legal and required deductions are made to cover the amount of the authorized CCEA dues deductions. If a bargaining unit employee is in a non-pay status during only part of the pay period and the salary is not sufficient to cover the full withholding, no deduction shall be made.

    f. CCEA shall refund to the County any amounts paid to it in error upon presentation of supporting

DRAFT

evidence. The County will deduct and remit to CCEA any amounts which were not deducted in accordance with the procedures prescribed herein.

2. The County shall make payroll deductions in reliance on CCEA's certification that the Association has and will maintain an authorization signed by each employee who affirmatively consents to pay CCEA membership dues. Similarly, the County shall only cancel or modify membership dues or any other mutually agreed payroll deduction for any bargaining unit employee in reliance on information provided by CCEA to the extent permitted by law.

3. The County shall not request that CCEA provide a copy of any bargaining unit employee's authorization unless a dispute arises about the existence or terms of the authorization.

4. CCEA shall indemnify, defend, protect and hold harmless the County and its elected and appointed officials, officers, employees, officers and agents from and against any and all claims, liabilities, losses, damages, fines, penalties, claims, demands, suits, actions, causes of action, judgments, costs and expenses arising from the application of this section, including, but not limited to, any claims made by bargaining unit employees for the return of membership dues deducted by the County in reliance on CCEA's certification, and any claims made by any bargaining unit employees for any deduction cancellation or modification the County made in reliance on the information provided by CCEA.

C. Public Employee Communication

1. This provision applies to all new employees hired into CCEA bargaining unit positions and is intended to comply with the provisions of Government Code, sections 3555 et seq.

    a. The County will provide CCEA with not less than ten (10) calendar days' advance written notice of the time, date and location of all new employee orientation meetings, unless an urgent and unforeseeable need for a new employee orientation meeting precludes the County from providing CCEA with ten (10) calendar days' advance notice. The advance notice will include the number of CCEA bargaining unit employees attending the orientation meetings. Notice will be made by way of email to the CCEA President or another contact person designated by CCEA.

    b. Upon request, CCEA will be given up to ten (10) minutes as part of the new employee orientation meetings to present information to bargaining unit employees generally relating to CCEA's role as representative, CCEA membership information, the rights and obligations created by the MOU and County personnel rules, and to answer questions. One (1) CCEA representative may present information to the new employees. Management representative shall excuse themselves and not be present during CCEA's portion of the new employee orientation meetings.

    c. The CCEA representative who present information at the new employee orientation meetings may do so while on duty without the loss of compensation, provided CCEA advises the Human Resources Director of the names of the employees who will be presenting information on behalf of CCEA at the new employee orientation meetings.

    d. The County shall not disclose the date/time/place of the new employee orientation to anyone other than the new employees and their departments, CCEA, and any vendors who are contracted to provide a service at the new employee orientation.

DRAFT

2. Information Requirements – The County will provide CCEA with a digital file via email to the email address designated by CCEA containing the following information for each employee to the extent the County has the information on file:

   - Name
   - Job title
   - Work location
   - Personal telephone number (may be home or cellular as provided by employee)
   - Home address
   - Personal email addresses if provided by the employee and on file with the County (new hires only) unless the employee submits a written request to the County and CCEA to withhold disclosure of his/her personal email address

   The above information will be provided on a monthly basis, except that the County is not required to provide personal telephone numbers, home addresses or personal email addresses unless requested by CCEA.

D. Attendance at Board of Supervisors' Meetings

1. A maximum of two (2) CCEA representatives may simultaneously attend any and all Board of Supervisors meetings on County time including budget hearings. The names of CCEA representatives who are authorized to attend Board of Supervisors meetings on County time must be provided to the Human Resources Director on or before July 1 of each year. Any combination of two (2) authorized CCEA representatives may attend the meetings at any given time.

E. Association Leave Bank

1. Commencing on October 1, 2025, and each October 1 thereafter, the County shall contribute twenty-four (24) hours per contract year to a CCEA Association Leave Bank to be used by designated CCEA representatives to conduct representational duties on behalf of bargaining unit members, excluding activities directly related to negotiations. Designated CCEA representatives who utilize Association Leave Bank hours shall not suffer a loss of compensation or other benefits. Unused hours shall not roll over from year to year and have no cash-out value.
2. **Request and Notification:** Union Representatives shall request Association Leave Bank time from their immediate supervisor in advance whenever possible, with a courtesy copy to the HR Director. Requests shall state the date and anticipated start/end time and note "Union representational duties." No employee names or confidential details are required.
3. **Tracking:** The HR Department shall track Association Leave Bank usage and provide quarterly usage reports to the Union upon request.
4. **Designated Representatives:** The Union shall annually provide the County with a list of designated representatives authorized to use Association Leave Bank time. Only those listed may access the Bank.
5. **Additional Time:** Any time used beyond the annual allotment shall be unpaid unless otherwise approved in writing by the County.

DRAFT

ARTICLE III
MANAGEMENT RIGHTS

Except as specifically limited by the terms of this MOU, the County, through its Board of Supervisors, shall have all management rights provided by the United States Constitution, the California State Constitution, California State Law, and Colusa County Personnel Rules.

ARTICLE IV
GENERAL PROVISIONS

A. Strikes and Lockouts

1. The CCEA agrees that during the term of this Agreement, neither it nor its officers, agents or members will engage in, encourage, sanction, support or suggest any strikes, work stoppages, slowdowns, or any other similar actions which would involve suspension of, or interference with, the normal work of the County.

2. The County will not lockout employees during the term of this Agreement.

B. No Reprisals

1. The County shall not interfere with or discriminate against any employee by reason of his or her membership in the CCEA or activity approved by this Agreement, nor will the County discourage membership in the CCEA or encourage membership in any other employee organization.

2. The CCEA recognizes its responsibility as the exclusive representative and agrees to represent all employees without discrimination, interference, restraint or coercion.

3. The provisions of this Agreement shall be applied equally to all employees without discrimination as to political opinion or affiliation, race, color, religious creed, sex, marital status, actual or perceived sexual orientation, age, national origin, military, or veteran status, genetic information, gender, gender identity, gender expression, medical condition, physical or mental disability.

ARTICLE V
SALARIES

A. Salaries

1. **One-time Lump Sum Payment**: In lieu of a Cost-of-Living (COLA) adjustment in 2025 and 2026, members shall receive the following one-time lump sum payment to be issued no later than 30 days from the acceptance of the negotiated package:
   - Employees with at least 12 months of service with the County shall receive a lump sum payment of $1,500.
   - Employees with less than one year of service with the County shall receive a lump sum payment of $750.

   The parties agree that these are one-time payments which do not meet the definition of compensation earnable nor does it qualify as any applicable special compensation for CalPERS reporting purposes. The County will issue this payment as a separate check from normal wages.

DRAFT

2. **Re-Opener Clause**: The County and CCEA shall agree to reopen negotiations limited to discussions regarding salary increases and lump sum payments only no later than September 1, 2026.

3. **Me-too Clause**: If during the term of this Memorandum of Understanding, the County grants any across-the-board or other uniform wage/salary increase (excluding regularly scheduled step increases, pre-existing contractually mandated increases, or any other legally mandated salary increase) to any employee or defined class of employees, including but not limited to employees of all recognized bargaining units, the County will grant the same wage/salary increase for all represented employees covered by this MOU on the same date, unless the wage/salary increase was granted in exchange for a reduction to a current benefit. For purposes of this provision, an across the board or uniform wage/salary increases includes any increases granted as percentages of existing wages/salaries, fixed dollar amounts, formula-based increase and tiered increases within identifiable employee classifications and groups, but excludes reclassifications and salary range adjustments for individual classifications.

B. Night Differential Pay

1. For employees covered by this Agreement, Night Differential Pay, which may be provided pursuant to Personnel Rule 1.107.1(k), is $1.50 per hour provided that employees called into work shall not be eligible for night differential pay.

Per Personnel Rule 1.107.1(k) Any County employee who performs the majority of his/her regular shift between the hours of four p.m. and eight a.m. (including but not limited to peace officers at the Sheriff's Department, road department equipment service workers, custodians, and library staff) shall receive additional compensation per shift.

C. Bilingual Pay

1. Bilingual Pay shall be paid to those qualified employees in positions where the County receives a benefit from the employee's ability in the second language. Effective December 1, 2025, qualified employees will receive bilingual pay based on their level of proficiency. Level I (speaking only) will be eligible for $80 per month and Level II (speaking, reading & writing) will be eligible for $100 per month.

2. The determination of County benefit shall be based on the Department Head's recommendation and approval of the Human Resources Director provided that such approval shall not be unreasonably withheld. Qualification shall be based on passing an approved language proficiency test modeled on the CHP proficiency test ("Test") and demonstrated proficiency in speaking, understanding, writing and reading the language.

Employees currently receiving bilingual pay will be placed in a tier based on current test scores. If the original test is not available, an assessment will need to be completed; the employee will remain at Level I until the assessment takes place. For employees whose assessment cannot be completed by December 1, 2025, any resulting adjustment in pay will be retroactive to December 1, 2025 for those employees only.

D. Emergency Standby Pay and Call Back Pay

1. Emergency Standby Pay of $25.00 per day shall be paid to employees required to be available outside their normal work hours on a standby basis for "emergency work" whether or not called back to work. For purposes of this section, emergency work is work that must be performed in response to an unforeseen sudden event which requires immediate response to prevent, mitigate or eliminate a substantial hazard to life, health, or property.

   ~~If~~ Employees on emergency standby who are called back to perform emergency work shall be paid for all hours worked at 1.5 times their regular hourly rate of pay or equivalent compensatory time off (CTO) with a guaranteed minimum of two (2) hours; except on holidays the rate of 1.5 times the employee's regular hourly pay rate shall be paid in addition to the paid holiday.

2. Call Back Pay: Employees who are not on emergency standby but are called back to work outside their regularly scheduled work hours to perform approved work, shall be paid for all hours over forty (40) called back to work at 1.5 times their regular hourly rate of pay or equivalent CTO with a guaranteed minimum of two (2) hours. Employees who are called back on holidays shall receive call back pay in addition to holiday pay pursuant to Article VI paragraph C.

   a. Notwithstanding the above, Public Works Department employees receive 1.5 times their regular rate of pay for all hours worked during a call back relating to road emergencies with a two (2) hour minimum.

E. Overtime

1. Overtime for employees covered by this Agreement shall be as specified in Colusa County Personnel Rules 1.107.1 Sections "l" through "t", except as follows:

   a. Hours worked in excess of 40 hours per week shall be compensated at the employee's election either at the rate of 1.5 times the employee's regular hourly rate of pay or as compensatory time off ("CTO") calculated at the rate of 1.5 times the number of overtime hours worked provided:

      1) CTO hours may be accumulated to a maximum of 80 hours at any given time and may be taken, with the advance approval of the employee's supervisor, as paid time off during the same calendar year in which they are accumulated;

      2) CTO hours are paid at an employee's regular rate of pay at the time the CTO is paid out;

      3) All accumulated CTO hours will be utilized or cashed out no later than December 31 of each year; and

      4) All accumulated CTO hours will be cashed out upon separation from County employment.

F. Time Worked While on Leave

1. Exempt employees on sick or vacation leave are not expected to work, which includes taking phone calls and checking or responding to e-mails. An exempt employee who does work may request a credit be added for actual time worked back into the relevant leave account. Any such request shall include supporting written documentation showing how and why the time was spent.

G. Temporary Promotions (Temporary Upgrade Pay)

DRAFT

1. When a position becomes vacant and there is a need to fill the vacant position pending recruitment for a permanent appointment, the appointing authority may request the Human Resources Director to authorize a temporary promotion of a regular full or part-time employee from a, lower level job class that is directly related to the vacant position.

   For purposes of this section, "vacant position" does not refer to a position that is temporarily available due to an employee's leave of absence.

2. The temporarily promoted employee shall meet the minimum qualifications for the higher-level job class as determined by the Human Resources Director. Employees serving a temporary promotion may apply for regular promotion to fill the permanent vacancy.

3. Temporary promotions provided under this section are intended to comply with California Government Code section 20480 and described in CalPERS Circular Letter 200-021-18. Incumbents must be relieved of all duties of their former position in a temporary promotion. Temporary promotions must not exceed 960 hours in each fiscal year. The additional compensation paid to employees serving in a temporary promotion will be reported to CalPERS as temporary upgrade pay.

4. Any regular employee who is temporarily promoted under this section, will receive an increase in pay beginning with the first day of the temporary promotion. Increases in pay related to temporary promotion are calculated in the same manner as a regular promotion.

5. Upon termination of a temporary promotion, the temporarily promoted employee shall be restored to their prior permanent position as if the employee had never left. Employees who are temporarily promoted pursuant to this section and are also eligible for a merit increase in their permanent job classification shall be eligible for the merit increase while serving in the temporary promotion and their temporary promotional pay shall be adjusted to reflect the merit increase, if granted.

6. In the event a temporarily promoted employee receives a regular promotion to the vacant position without any lapse in time between the temporary promotion and the regular promotion, the employee's, time from the first day of temporary promotion shall count as service in the higher- level position for purposes of merit advancement in the higher salary range.

H. Out of Class Assignments

An employee may be requested to perform an out of class assignment for a limited term. Employees assigned to perform clearly established duties of a higher-level position or classification shall receive out of class pay equal to 5% of their base pay for each day they perform the higher-level duties. Employees are not required to assume all duties of the higher-level position or classification to receive out of class pay. Out of class pay pursuant to this section is not reportable to CalPERS and is not considered as part of the CalPERS retirement benefit calculation.

I. Agricultural Equipment Operator Assignments

Employees within the Department of Agriculture who are routinely and consistently assigned to operate or drive specialized agricultural equipment or vehicles requiring a Class B driver's license, shall receive special assignment pay equal to 5% of their base pay for the working pay period the assignment was performed.

J. Inpatient Interventionist Assignments

Employees shall receive an enhanced standby incentive pay when voluntarily accepting a shift for Inpatient Interventionist.

Standby pay of $25 per 8-hour shift will be paid to employees within the Behavioral Health Department who are offered and accept, on a rotational basis, patient crisis sitter or patient driver shifts, which require these employees to be available outside their normal work hours on a standby basis for emergency work, whether or not called in to work. If called back to perform emergency work, employees shall be paid for all hours worked at 1.5 times their regular hourly rate of pay or equivalent compensatory time off (CTO) with a guaranteed minimum of two (2) hours, except on holidays, the rate of 1.5 times their regular hourly pay rate shall be paid in addition to the holiday.

Crisis Sitter shifts are available for the following BHS classification: therapists, mental health specialists, case managers, family specialists and peer specialists. Driver shifts are available for all permanent status BHS employees with a valid CA driver's license. No employee may accept shifts that will cause the employee to work a 7-day work week.

K. Compensation for Chaperones Working 24-Hour Schedule

This provision is to address compensation for employees serving as chaperones and working a 24-hour schedule. During each 24-hour workday, employees will be allowed a six (6) hour sleep period commencing at 11:30 PM and ending at 5:30 AM the following morning ("sleep time window"). If the employee receives at least five (5) consecutive hours of uninterrupted sleep during the sleep time window (defined as not performing the duties of a chaperone or performing other work-related business required by the County), the six (6) hour sleep time shall be excluded from hours worked during the 24-hour work day and the employee will be compensated for 18 hours of work.

If, however, the employee is required to perform the duties of a chaperone or other work-related business during the sleep time window period, all time spent performing such work shall be considered additional hours worked. In the event the employee cannot get at least five (5) hours of uninterrupted sleep during the sleep time window period, the entire six (6) hour sleep time shall be regarded as hours worked.

ARTICLE VI
HOLIDAYS

A. Holidays

1. Employees covered by this Agreement are entitled to the paid holidays listed below and specified in section 1.108.2(f) of the Colusa County Personnel Rules, which shall be considered to fall on the day-of-the-week designated as the day of celebration by the Board, unless they work in which case paragraph "D" below controls.

2. To take time off work for holidays or be compensated, the County recognizes the following holidays:

- January 1st, known as "New Year's Day."
- The third Monday in January, known as "Martin Luther King, Jr. Day."
- February 12th, known as "Lincoln Day."
- The third Monday in February, known as "Presidents' Day."
- March 31st, known as "Cesar Chavez Day."

DRAFT

- The last Monday in May, known as "Memorial Day."
- **June 19th, known as "Juneteenth"**
- July 4th, known as "Independence Day."
- The first Monday in September, known as "Labor Day."
- The second Monday in October, known as "Columbus Day."
- November 11th, known as "Veterans Day."
- The fourth Thursday of November, known as "Thanksgiving Day."
- The day after Thanksgiving.
- **December 24th, known as "Christmas Eve"**
- December 25th, known as "Christmas Day."
- Every day appointed by the President **(see Section C below)** or Governor as a day free of work including but not limited to a national day of mourning, thanksgiving, or other day no matter how designated of national or statewide significance unless otherwise decided by the Board.

a. If any of the holidays recognized by the county falls on a Saturday, the preceding Friday will be a holiday.

b. If any of the holidays falls on a Sunday, the following Monday will be a holiday.

B. Floating Holiday

1. Employees covered by this Agreement may each fiscal year select one floating holiday one day not identified above.

C. Newly Declared Federal Holidays

1. Effective October 1, 2025, the County will recognize newly declared single-occurrence federal observances, commemorative days, or national moments of remembrance that are not designated as recurring federal holidays established by an act of Congress or Presidential proclamation, provided the holiday is not designated as a permanent, recurring federal holiday observed, nationally. Permanent, recurring federal holidays must be bargained. The County will provide employees the day off with pay in observance of any such newly declared federal observances, under the following conditions:

1. **Scope**: This provision applies only to federal holidays declared after September 30, 2025. It does not apply retroactively to holidays declared or observed prior to this date.
2. **Holiday Scheduling**: The recognized single-occurrence federal observance, commemorative day, or national moment of remembrance that are not designated as

recurring federal holidays will be observed in the same manner as other fixed-date or floating holidays already recognized by the County.

3. **Board Approval**: In recognition that federally declared observances, commemorative days, or national moments of remembrance are frequently announced with minimal advance notice, such declarations shall be deemed to carry the implicit approval of the Board of Supervisors, and no additional Board action shall be required.

D. Holiday Compensation

1. Employees who work on any of the holidays listed above and specified in section 1.108.2(f) of the Colusa County Personnel Rules shall be paid as their full compensation for working on a holiday two (2) times their regular hourly rate for each hour worked with no additional pay for the holiday. This section does not apply to employees on standby who are called in to work in an emergency situation whose pay rate is governed by Article V Paragraph E of this Agreement.

2. If a holiday falls on a Saturday or Sunday and either day is part of an employee's scheduled workweek, the employee will receive his regular rate of pay and the day shall be counted as a regular workday.

3. If an employee resigns and the last day worked is the day before a holiday, the employee will not be paid for the holiday.

4. Temporary, extra help, limited term and seasonal employees required to work on a holiday shall be paid the regular rate of pay established for their positions.

5. If an employee is on a leave of absence without pay, the employee will not be paid for holidays except as required by law.

ARTICLE VII
LEAVES

A. Vacation

1. Employees covered by this Agreement are entitled to Vacation Leave with pay as provided in section 1.108.2(a) et seq. of the Colusa County Personnel Rules.

1) The County vacation leave with pay plan functions under an accrual and usage plan (the plan). Under the plan, vacation will be earned and credited on a monthly-basis

2) Employees are encouraged and expected to use all vacation in the year in which credited;

3) Vacation shall be used in no less than fifteen-minute increments;
   a) Only accrued leave can be used. If there is no leave on the books, it cannot be used.

4) Vacation must be scheduled in advance, subject to pre-approval by the employee's supervisor;

5) Appointing authorities are charged with actively managing the vacation usage of their employees, to ensure vacation is used in accordance with this section;

6) Vacation shall accrue on an hourly basis, based on an employee's anniversary date. An employee may accumulate a maximum of 1.5 times their annual accrual. An employee who accumulates vacation in excess of the maximum allowable hours will stop accruing vacation until their accumulated vacation hours fall below the maximum allowed.

DRAFT

7) Vacation shall accrue and may be accumulated at the following rates:

Time in Service	Annual Vacation	Monthly Accrual 37.5-hour week	Monthly Accrual 40-hour week	Maximum Accumulation 37.5-hour week	Maximum Accumulation 40-hour week
0 through 3 yrs.	0 – 10 days	6.25 hours	6.666 hours	112.50 hours	120.00 hours
4 through 7 yrs.	15 days	9.375 hours	10.000 hours	168.75 hours	180.00 hours
8 through 11 yrs.	20 days	12.500 hours	13.333 hours	225.00 hours	240.00 hours
12+ yrs.	25 days	15.625 hours	16.666 hours	281.25 hours	300.00 hours

8) Vacation hours accumulated by an employee before January 1, 2009, will be carried forward in a separate employee vacation account, which may be referenced as the "pre-2009 vacation account," subject to the following:

a) Effective January 1, 2014, the value of each vacation hour included in an employee's pre-2009 vacation account will be calculated at the employee's current hourly rate of pay and will be frozen at that amount.

b) If, subsequent to January 1, 2014, an employee takes vacation-time off using vacation hours credited to the pre-2009 vacation account, they will be granted vacation time off on an hour-for-hour basis, without regard for their current rate of pay.

9) Legal holidays occurring during vacation leave will not be charged as vacation leave but as a holiday;

10) Employees may request conversion into cash payments of up to forty (40) hours of accrued vacation not more than once in a fiscal year. Employees may also elect such cash conversion to be deposited into a deferred compensation account in the employee's name. Employees must retain a minimum of forty (40) hours in their leave bank to make a conversion request.

11) Part-time employees shall accrue and may accumulate vacation leave on a pro-rata basis equal to their prorated service time and their prorated hours worked;

12) Upon termination, the employee or their estate will be paid the monetary value of the earned unused vacation in the employee's vacation account.

13) Starting from the first complete pay period after October 1, 2023, all employees will be able to include their previous public service experience for calculating vacation accrual. Verifiable experience is counted in complete years (equivalent to twelve [12] months). Each employee shall be credited for the purpose of accrual, with years of service at other public agencies on a year for year basis. The maximum vacation allowance will correspondingly align with the updated years of service for vacation.

B. Sick Leave

1. Employees covered by this Agreement are entitled to accrue, accumulate and use Sick Leave with pay as provided in section 1.108.2(b) et seq. of the Colusa County Personnel Rules except as follows:

a. Effective January 1, 2017, each County employee who separates from County service will be compensated for unused sick leave based on the formula specified in section 1.108.2(b), subsection et seq. except that:

i. Employees who separate from County service for any reason with unused sick leave that was accrued and accumulated before December 31, 2009 may choose to receive the entire amount owed in cash pursuant to section 1.108.2(b)(6) et seq. or may choose to have the entire amount owed deposited into a county offered IRC 457 Plan subject to the limitations of such Plan.

b. Effective January 1, 2017, employees who retire from County service with unused sick leave that was accrued and accumulated after December 31, 2009 will be compensated based on the formula and conditions which follow:

i. An employee who retires with at least 15 years of Colusa County service and a minimum combined (old bank plus new bank) sick leave balance of 200 hours at the time of retirement will receive an amount equal to twenty-five percent (25%) of his/her current base hourly salary for all qualified hours.

ii. An employee who retires with at least 20 years of Colusa County service and a minimum combined (old bank plus new bank) sick leave balance of 250 hours at the time of retirement will receive an amount equal to fifty percent (50%) of his/her current base hourly salary for all qualified hours.

iii. An employee who retires with at least 25 years of Colusa County service and a minimum combined (old bank plus new bank) sick leave balance of 300 hours at the time of retirement will receive an amount equal to seventy-five percent (75%) of his/her current base hourly salary for all qualified hours.

iv. An employee who retires with at least 30 years of Colusa County service and a minimum combined (old bank plus new bank) sick leave balance of 350 hours at the time of retirement will receive an amount equal to one hundred percent (100%) of his/her current base hourly salary for all qualified hours.

Employees who are compensated for unused sick leave pursuant to paragraphs b.i. through b.iv. above may ~~will~~ have ~~the~~ any ~~entire~~ amount owed deposited into a County offered IRC 457 Deferred Compensation Plan subject to the limitations of such plan and/or to have any amount owed deposited into the County-sponsored Health Reimbursement Arrangement ~~on their behalf~~ subject to the limitations of the HRA plan document.

1. For the purposes of this benefit only, County employees who are elected to a County office will be compensated as though they had “retired” effective the date they assume the County elected office.

C. Bereavement Leave

1. Bereavement leave will be granted in the case of death in the immediate family of the employee or spouse, pursuant to Colusa County Personnel Rules 1.108.2(d).

D. Jury Duty or Court Witness

1. Employees who are required to serve on jury duty shall receive full pay, but shall remit to the County any compensation, except reimbursement for parking, meals, mileage or lodging which may be received for such service.

DRAFT

2. An employee who is required to appear as a witness in a court case which involves the County or County business shall receive full pay, but shall remit to the County any witness fees, including fees received as an expert witness, except reimbursement for parking, meals, mileage or lodging which may be received for such service.

E. Education Leave

1. Upon the recommendation of the department head, the Board of Supervisors may grant an employee up to nine (9) months of educational leave without pay. The department head shall consider the following criteria in making recommendation to the Board to grant educational leave: Whether

    a. Education or training will increase on-the-job skills; and

    b. Education or training will increase the employee's qualifications for promotion; and

    c. The employee indicates a desire to make County employment a career; and

    d. The employee has demonstrated high motivation for self-improvement; and

    e. The employee has shown indications of superior work performance in present position; and

    f. The employee has shown evidence of promotional potential indicating the capacity to perform in a more responsible position; and

    g. The employee has shown potential, motivation and suitability for further educational opportunity.

F. All Leaves Recognized By Law

As stated in the Colusa County Personnel Rules section 1.108.2, employees covered by this Agreement may take any leave recognized by law.

1. Employees covered by this Agreement, solely at their option, may elect to retain up to forty (40) hours of accrued vacation leave while on a Medical and Family Leave lasting longer than three (3) days and be placed in leave without pay status prior to exhausting all accrued vacation leave. Unless the employee notifies the County of the election to retain vacation leave at the time of Medical and Family Leave, all paid leave will run concurrently for the entire Medical and Family Leave and must be exhausted prior to leave without pay. The County's Medical and Family Leave Policy (Policy #308) and §1.108 of the Colusa County Personnel Rules shall be interpreted and applied in a manner consistent with this provision.

G. Required Continuing Professional Education Leave

1. Professional employees will be provided paid time away from work to complete necessary continuing education needed to maintain their licenses.

ARTICLE VIII
HEALTH AND WELFARE

The County provides the health and welfare benefits identified in the Colusa County Personnel Rules

DRAFT

to all bargaining unit employees subject to the terms which follow:

A. Medical Insurance

1. Except as provided in Section H, below the County will continue to contract with the Public Employees' Retirement System (CalPERS) for the purpose of providing medical insurance benefits for active employees in accordance with the Public Employees Medical and Hospital Care Act (PEMHCA) and eligible retired employees. Eligibility of active and retired employees and the dependents of active and retired employees to participate in this program shall be in accordance with regulations promulgated by CalPERS.

2. Pursuant to Government Code Section 22892 (a) the County will contribute the statutory minimum employer contribution (MEC) on behalf of each active employee and each retiree who subscribes for coverage.

3. Except as provided herein, represented employees shall purchase medical insurance through the CalPERS Medical Program.

    a. Represented employees who have alternative medical insurance coverage from another source, which provides "Minimum Essential Coverage" as that term is defined by the agencies responsible for the administration of the Affordable Care Act, may, by providing written proof of such alternative coverage to the County, opt out of the CalPERS Medical Program. Employees who opt out of the CalPERS Medical Program shall be required to provide written confirmation of alternative Minimum Essential Coverage annually thereafter, during the CalPERS open enrollment period. If such confirmation is not provided, the employee shall be required to enroll in the CalPERS Medical Program.

B. Dental Insurance

1. The County will continue to make dental insurance available to active employees and their eligible dependents of active employees through the County sponsored dental plan(s). The County's contributions toward such dental insurance shall be capped at $45.00 per month.

2. Except as provided herein, represented employees shall be required to purchase dental insurance through the County sponsored plan. Represented employees who have dental insurance coverage from another source may, by providing written proof of such alternative coverage to the County, opt out of the dental plan. Employees who opt out of the dental plan shall be required to provide written confirmation of alternative coverage annually thereafter, during the dental plan open enrollment period. If such confirmation is not provided, the employee shall be required to enroll in the dental plan.

    a. Employees who were hired prior to January 1, 2013 and who opt out of the dental plan pursuant to Section B.2. above, shall be provided a $45.00 per month cash-in-lieu benefit which the employee may deposit into an appropriate account within the County Cafeteria Plan or may be taken as a cash payment that will be applied to the employee's monthly paycheck. Amounts taken as cash will be treated as taxable income.

C. Cafeteria Plan

DRAFT

1. The County provides a Cafeteria Plan available to all represented employees. At a minimum, the County Cafeteria Plan provides non-elective County contributions that may be used to pay all or a portion of the monthly premium for county-sponsored group health insurance, and the pre-tax payments of the employee share of county-sponsored group health insurance premiums. The County Cafeteria Plan also includes a Flexible Spending Account, a Health Reimbursement Account, and a Dependent Care Account into which employees may make pre-tax contributions through the execution of Salary Reduction Agreements. Participation in the County Cafeteria Plan shall be pursuant to the terms, conditions and restrictions of the Plan Administrator and shall be subject to the terms that follow.

   a. Effective December 1, 2025 and each December 1st thereafter, the County will make non-elective contributions into the Cafeteria Plan on behalf of each represented employee who is enrolled in the CalPERS medical plan pursuant to Section A.3., sufficient that when combined with the MEC totals the following:

      i. For employees who are enrolled in employee only coverage, the County will contribute a dollar amount sufficient that when combined with the MEC is the equivalent of the actual premium, for employee only coverage based upon CalPERS Gold plan.
      ii. For employees who are enrolled in employee plus one coverage, the County will contribute a dollar amount sufficient that when combined with the MEC is the equivalent of the actual premium, for employee plus one coverage based upon CalPERS Gold plan.
      iii. For employees who are enrolled in family coverage, the County will contribute a dollar amount sufficient that when combined with the MEC is the equivalent of the actual premium for family coverage based upon CalPERS Gold plan.

   c. In the event an employee has excess County Cafeteria contributions (before or after AFLAC or Colonial), the dollar equivalent thereof shall be contributed to the employee's Health Reimbursement Account (HRA) to the extent allowable by law.

   d. Upon expiration of the MOU, County contributions shall remain at the 2027 contribution rates until such time as an alternative agreement is reached or alternative terms are imposed following the exhaustion of impasse and fact-finding procedures, if applicable.

D. Medical In Lieu

1. Subject to Section D.2 below, employees who, pursuant to Section A.3 a, above elect not to receive County-sponsored CalPERS health benefits, the County will provide a monthly In-lieu benefit which the employee may deposit into an appropriate account within the County Cafeteria Plan or may be taken as a cash payment that will be applied to the employee's monthly paycheck. Amounts taken as cash will be treated as taxable income.

   a. Employees hired prior to January 1, 2013 and who qualify for the above-described In-lieu benefit shall receive $715 per month.

   b. Employees hired after December 31, 2012 and who qualify for the above-described In-lieu benefit shall receive $333 per month as of January 1, 2024 and $400 per month as of January 1, 2025.

E. Part Time Employees

1. Part time employees regularly scheduled to work twenty (20) or more, but fewer that thirty (30) hours a week will be eligible for the health, dental, vision and Cafeteria Plan benefits appropriate to their hire-date equal to the pro rata relationship between the hours regularly scheduled to work and full time. Benefits for employees who are regularly scheduled to work thirty (30) hours or more per week will not be prorated.

    a. Part time employees regularly scheduled to work twenty (20) hours or more but fewer than thirty (30) hours each week are not required to accept county-sponsored health benefits and are not eligible for cash-in-lieu benefits.

    b. Part time employees regularly scheduled to work thirty (30) hours or more each week are subject to the provisions of Section A.3. above and may be eligible for cash-in-lieu benefits if they satisfy the requirements of Section A.3a.

F. Vision Care and Employee Assistance Plans

1. Vision insurance shall be provided in accordance with the Vision Plan and shall include at a minimum an annual examination and the replacement of lenses and frames every twelve (12) months. The County will contribute one-hundred percent (100%) of the monthly premium for employee-only coverage. Employees may enroll eligible family members at the employee's expense and subject to the rules of the insurance provider.

2. The County shall provide to each represented employee an Employee Assistance Plan that includes up to six (6) visits during each calendar year with a designated Health Care Provider. Such Employee Assistance shall be strictly confidential, and the employee need only show proof of employment with Colusa County to receive this benefit.

G. Health Reimbursement Arrangement

1. The County will make an IRS qualified Health Reimbursement Arrangement (HRA) available for eligible represented employees who retire from the County and enroll in the County-Sponsored Health Plan. Subject to the conditions described below, the County will make monthly contributions into the HRA on behalf of each eligible retiree.

    a. For employees hired before January 1, 2013 and who retired prior to the execution of this MOU, the County will continue to contribute $128.26 per month to the retirees HRA. This retiree HRA contribution is separate from and in addition to the PEMHCA Minimum Employer Contribution (MEC).

    b. For employees hired before January 1, 2013 and who retire following the execution of this MOU, the County will continue to contribute $128.26, less any future increases to the MEC, to the retiree's HRA, so that the combination of the MEC and the retiree HRA contribution does not exceed $267.26 per month. This retiree HRA contribution is separate from the MEC.

    c. Employees hired after January 1, 2013 and who subsequently retire are not eligible for the $128.26 retiree HRA contribution provided herein. Such retirees receive only the MEC.

2. Effective October 1, 2025, the County will contribute $75 per month into individual IRS qualified Health Reimbursement Arrangement (HRA) accounts for each active employee. This

contribution is in addition to any excess cafeteria funds. Employees will be responsible for any administrative fees associated with their HRA account. Upon retirement the remaining balance of an active employee's HRA will be rolled into the employee's retiree HRA.

H. Employee Wellness Program

1. The County will reimburse employees covered by this Agreement for up to 15% of their monthly gym membership fee through the Trindel Insurance program. The County, through the Human Resources Department, will provide information to employees about this program.

I. Health Care Compliance

1. The Parties intend to comply with legislative and regulatory requirements for the provision of health care insurance and benefits. If, during the term of this MOU, it is determined that the County is out of compliance with any health care related mandate or mandates, the County will take the steps necessary to comply with the law.

2. Before taking action pursuant to paragraph 1 above, the County will notify the Association of the issue and the County's intended action. Time permitting and at the request of the Association, County representatives will meet with Association representatives before acting. If the actions deemed necessary to comply with the law impact employee benefits, the County and the Association will meet and confer regarding such impacts.

ARTICLE IX
RETIREMENT

A. Retirement Plans

1. CalPERS Retirement Benefits

a, The County's contract with CalPERS provides the following retirement benefits for bargaining unit employees. CalPERS determines an employee's membership category as classic or new.

1. Tier 1 – Retirement benefits for professional-administrative "classic" members hired prior to December 31, 2012 shall receive the following CalPERS benefits.

- 3% @60 retirement formula
- Single highest year final compensation period
- Employee pays an 8% member contribution

2. Tier 2 – Retirement benefits for professional-administrative "new" members hired on or after January 1, 2013 are as follows:

- 2% @ age 62 retirement formula
- Three-year average final compensation period
- Employee pays 50% of the normal cost as determined by CalPERS

b. To the extent allowable by CalPERS, the County will continue to provide the following optional retirement enhancements:

- Military Service Credit as Public Service for Miscellaneous and Safety employees pursuant to Government Code Section 21024.

- Pre-Retirement Option 2W Death Benefit pursuant to Government Code Section 21548.

c. Member's contribution toward retirement costs are paid subject to the provisions of section 414(h)(2) of the Internal Revenue Code.

2. Should the statutory minimum employee member contribution rates for the above retirement plans be increased through State legislative or CalPERS administrative action during the term of this Agreement, either party may request to reopen this section to negotiate possible changes to the employee contribution rates specified in this MOU. Unless required by law, the employee contribution rates specified above will not change during the term of this MOU without mutual agreement of the parties.

B. Internal Revenue Code Section 457 Deferred Compensation Plans

1. The County will continue to make IRC section 457 deferred compensation plans (IRC 457 Plans) available to represented employees, subject to the terms and conditions of plan sponsors which, in some cases, may require minimum employee contributions. Employee participation in such plans is voluntary.

2. Except for the matching contributions provided below, the County shall not make contributions on behalf of represented employees. The County will match employee contributions to a county-offered IRC 457 Plan and effective October 1, 2025 contribute increased amounts as follows:

a. For employees with up to seven (7) years of county service, $60.00 per month. To qualify for matching contributions, employees must contribute an amount equal to or greater than the plan minimum contribution.

b. For employees with seven (7) to fifteen (15) years of county service up to $80.00 per month. To qualify for matching contributions, employees must contribute an amount equal to or greater than the plan minimum contribution.

c. For employees with more than fifteen (15) years of county service up to $100.00 per month. To qualify for matching contributions, employees must contribute an amount equal to or greater than the plan minimum contribution.

3. Specific information regarding each of the available IRC 457 Plans may be obtained from the Human Resources Department.

ARTICLE X
MISCELLANEOUS

A. Personal Protective Equipment.

1. Employees may be required to wear personal protective equipment, including but not limited to prescription safety eyeglasses, which will be provided by the County at no cost to employees. If a Department Head determines that employees are required to wear safety footwear, the County will, on

DRAFT

an annual basis, reimburse the employee for the cost of such footwear in annual reimbursements up to $200 for each 12-month period from July 1 to June 30; subject to the County' s claims procedures, with no benefit carry-over, and employees on any type of long-term leave of absence will be ineligible for reimbursement until they return to full duty status.

.

B. Required Licenses.

1. Employees are responsible for meeting the requirements and for paying any fees involved in obtaining necessary licenses, certificates, permits, and registrations. However, where such licenses, certificates, permits, and registrations are required in order for the employee to maintain his/her current position, reimbursement may be sought from his/her employer upon proof of successful completion of tests or other requirements. Department heads are responsible for informing their employees that their duties require them to obtain such licenses, etc., and for seeing that their employees obtain the licenses. Department heads should make available relevant information regarding applications, fees, and qualifications for licenses required by positions within their department.

C. Layoffs.

1. Layoffs in non-general fund Departments shall be contained within those Departments with no right for laid off employees to bump outside the Departments.

D. Partial Day Absences

1. In recognition of the extended hours often worked by employees who are exempt from the overtime provisions of the Fair Labor Standards Act ("FLSK) and at the sole discretion of the Appointing Authority (or Assistant in the Appointing Authority's absence), FLSA Exempt employees may be granted partial day absences without charging such absences to an appropriate leave balance subject to the following limitations:

    a. Partial day absences which would otherwise be charged to Sick Leave, including Family-Sick Leave, shall be charged to Sick Leave.

    b. If an employee has been placed on a Performance Improvement Plan or is the subject of a Coaching Memorandum related to attendance issues, partial day absences shall be charged to the appropriate leave balance.

ARTICLE XI
SAVINGS

If any provision of this Agreement should be held invalid by operation of law or by tribunal of competent jurisdiction, or if compliance with or enforcement of such provision shall be restrained by such tribunal, the remainder of the Agreement shall remain in full force and effect.

ARTICLE XII
PERSONNEL RULES

Upon implementation of this Agreement, any terms and conditions of employment not specifically discussed herein shall be governed by the provisions of the Colusa County Code Personnel Rules.

DRAFT

ARTICLE XIII
FULL UNDERSTANDING

This Agreement constitutes the full understanding of the parties with respect to the matters set forth herein. The parties further agree that any amendment to this Agreement during the term of the Agreement must be reduced to writing and may be done only by mutual consent of the parties.

ARTICLE XIV
TERM

This Agreement shall remain in full force and effect from October 1, 2025, through and including September 30, 2027 provided that the County and/or the CCEA shall have the right to reopen negotiations limited to discussions regarding salary increases and lump sum payments, only, no later than September 1, 2026.

Dated: _____
Colusa County Employee Association

_____
Ann Nordyke
President

Dated: _____
County of Colusa

_____
Daurice Kalfsbeek-Smith
Chair of the Board

ATTEST: Marcos Kropf, Interim Clerk to the Board of Supervisors

_____
Patricia Rodriguez, Deputy Clerk

_____
Madison Williams
CCEA Chief Negotiator

_____
Dar Rhodes
HR Director / County Chief Negotiator

DRAFT

MEMORANDUM OF UNDERSTANDING

Between

THE COUNTY OF COLUSA

And

THE COLUSA COUNTY EMPLOYEES' ASSOCIATION
(Confidential Bargaining Unit)

TERM
October 1, 2025 – September 30, 2027

TABLE OF CONTENTS

PREAMBLE 4

ARTICLE I – RECOGNITION 4

ARTICLE II – CCEA RIGHTS

A. CCEA Rights 4
B. Dues Deduction 4
C. Public Employee Communication 5
D. Attendance at Board of Supervisors' Meetings 6
E. Association Leave Bank 6

ARTICLE III – MANAGEMENT RIGHTS 7

ARTICLE IV – GENERAL PROVISIONS

A. Strikes and Lockouts 7
B. No Reprisals 7

ARTICLE V – SALARIES

A. Salaries 7
B. Confidential Pay 8
C. Bilingual Pay 8
D. Standby Pay and Emergency Call Back Pay 8
E. Overtime 9
F. Temporary Promotions 9
G. Out of Class Assignments 10
H. Agricultural Equipment Operator Assignments 10
I. Inpatient Interventionist Assignments 10
J. Compensation for Chaperones Working 24-Hour Schedule 11

ARTICLE VI – HOLIDAYS

A. Holidays 11
B. Floating Holiday 12
C. Newly Declared Federal Holidays 12
D. Holiday Compensation 13

ARTICLE VII – LEAVES

A. Vacation 13
B. Sick Leave 15
C. Bereavement Leave 16
D. Jury Duty or Court Witness 16
E. Education Leave 16
F. All Leaves Recognized by Law 16

TABLE OF CONTENTS

ARTICLE VIII – HEALTH AND WELFARE

A. Medical Insurance 17
B. Dental Insurance 17
C. Cafeteria Plan 18
D. Medical-In-Lieu 18
E. Part Time Employees 19
F. Vision Care and Employee Assistance Programs 19
G. Health Reimbursement Arrangement 19
H. Employee Wellness Program 20
I. Health Care Compliance 20

ARTICLE IX – RETIREMENT

A. Retirement Plan 20
1. Retirement Formulas 20
2. Retirement Plan Contributions 20
B. Internal Revenue Code Section 457 Deferred Compensation Plans 21

ARTICLE X – MISCELLANEOUS

A. Personal Protective Equipment 21
B. Required Licenses 22
C. Layoffs 22

ARTICLE XI – SAVINGS 23

ARTICLE XII – PERSONNEL RULES 23

ARTICLE XIII – FULL UNDERSTANDING 22

ARTICLE XIV – TERM 23

SIGNATURES 23

PREAMBLE

This Memorandum of Understanding ("MOU" or "Agreement") is entered into by and between the County of Colusa ("County") and the Colusa County Employees Association ("CCEA" or "Association") and sets forth the wages, benefits, hours of work, and other terms and conditions of employment for County employees assigned to the Confidential Bargaining Unit.

ARTICLE I
RECOGNITION

Pursuant to Government Code Section 3500, et seq. and applicable provisions of the Colusa County Personnel Rules, the County recognizes the CCEA as the exclusive representative for all County employees assigned to the Confidential Bargaining Unit.

ARTICLE II
CCEA RIGHTS

A. CCEA Rights

1. CCEA shall have all rights and privileges provided by the United States Constitution, the California State Constitution, Federal law, California State law, and the Colusa County Personnel Rules.

B. Dues Deduction

1. The County shall deduct CCEA membership dues and any other agreed-upon payroll deductions to the extent permitted by law from the monthly pay of each bargaining unit employee in accordance with the procedures set forth herein.

a. Dues paying bargaining unit employees who have affirmatively consented to or authorized dues deductions shall be entitled to have dues deducted upon signing and filing with CCEA an authorization form provided by Association. CCEA will notify the County of the employee's name and the amount of dues to be withheld. The dues deduction form currently in use may continue to be utilized by CCEA.

b. The County agrees to direct each bargaining unit employee to CCEA in response to any questions or concerns about dues or any other mutually agreed payroll deduction.

c. CCEA is responsible for providing the County with timely information about changes to employee dues and any other lawful CCEA-related payroll deductions.

d. Dues withheld by the County shall be transmitted monthly to the CCEA officer designated in writing by the Association as the person authorized to receive the funds at the address specified.

e. A bargaining unit employee's earnings must be regularly sufficient after other legal and required deductions are made to cover the amount of the authorized CCEA dues deductions. If a bargaining unit employee is in a non-pay status during only part of the pay period and the salary is not sufficient to cover the full withholding, no deduction shall be made.

f. CCEA shall refund to the County any amounts paid to it in error upon presentation of supporting

evidence. The County will deduct and remit to CCEA any amounts which were not deducted in accordance with the procedures prescribed herein.

2. The County shall make payroll deductions in reliance on CCEA's certification that the Association has and will maintain an authorization signed by each employee who affirmatively consents to pay CCEA membership dues. Similarly, the County shall only cancel or modify membership dues or any other mutually agreed payroll deduction for any bargaining unit employee in reliance on information provided by CCEA to the extent permitted by law.

3. The County shall not request that CCEA provide a copy of any bargaining unit employee's authorization unless a dispute arises about the existence or terms of the authorization.

4. CCEA shall indemnify, defend, protect and hold harmless the County and its elected and appointed officials, officers, employees, officers and agents from and against any and all claims, liabilities, losses, damages, fines, penalties, claims, demands, suits, actions, causes of action, judgments, costs and expenses arising from the application of this section, including, but not limited to, any claims made by bargaining unit employees for the return of membership dues deducted by the County in reliance on CCEA's certification, and any claims made by any bargaining unit employees for any deduction cancellation or modification the County made in reliance on the information provided by CCEA.

C. Public Employee Communication

1. This provision applies to all new employees hired into CCEA bargaining unit positions and is intended to comply with the provisions of Government Code, sections 3555 et seq.

    a. The County will provide CCEA with not less than ten (10) calendar days' advance written notice of the time, date and location of all new employee orientation meetings, unless an urgent and unforeseeable need for a new employee orientation meeting precludes the County from providing CCEA with ten (10) calendar days' advance notice. The advance notice will include the number of CCEA bargaining unit employees attending the orientation meetings. Notice will be made by way of email to the CCEA President or another contact person designated by CCEA.

    b. Upon request, CCEA will be given up to ten (10) minutes as part of the new employee orientation meetings to present information to bargaining unit employees generally relating to CCEA's role as representative, CCEA membership information, the rights and obligations created by the MOU and County personnel rules, and to answer questions. One (1) CCEA representative may present information to the new employees. Management representative shall excuse themselves and not be present during CCEA's portion of the new employee orientation meetings.

    c. The CCEA representative who present information at the new employee orientation meetings may do so while on duty without the loss of compensation, provided CCEA advises the Human Resources Director of the names of the employees who will be presenting information on behalf of CCEA at the new employee orientation meetings.

    d. The County shall not disclose the date/time/place of the new employee orientation to anyone other than the new employees and their departments, CCEA, and any vendors who are contracted to provide a service at the new employee orientation.

2. Information Requirements – The County will provide CCEA with a digital file via email to the email address designated by CCEA containing the following information for each employee to the extent the County has the information on file:

   - Name
   - Job title
   - Work location
   - Personal telephone number (may be home or cellular as provided by employee)
   - Home address
   - Personal email addresses if provided by the employee and on file with the County (new hires only) unless the employee submits a written request to the County and CCEA to withhold disclosure of his/her personal email address

   The above information will be provided on a monthly basis, except that the County is not required to provide personal telephone numbers, home addresses or personal email addresses unless requested by CCEA.

D. Attendance at Board of Supervisors' Meetings

1. A maximum of two (2) CCEA representatives may simultaneously attend any and all Board of Supervisors meetings on County time including budget hearings. The names of CCEA representatives who are authorized to attend Board of Supervisors meetings on County time must be provided to the Human Resources Director on or before July 1 of each year. Any combination of two (2) authorized CCEA representatives may attend the meetings at any given time.

E. Association Leave Bank

1. Commencing on October 1, 2025, and each October 1 thereafter, the County shall contribute twenty-four (24) hours per contract year to a CCEA Association Leave Bank to be used by designated CCEA representatives to conduct representational duties on behalf of bargaining unit members, excluding activities directly related to negotiations. Designated CCEA representatives who utilize Association Leave Bank hours shall not suffer a loss of compensation or other benefits. Unused hours shall not roll over from year to year and have no cash-out value.
2. **Request and Notification:** Union Representatives shall request Association Leave Bank time from their immediate supervisor in advance whenever possible, with a courtesy copy to the HR Director. Requests shall state the date and anticipated start/end time and note "Union representational duties." No employee names or confidential details are required.
3. **Tracking:** The HR Department shall track Association Leave Bank usage and provide quarterly usage reports to the Union upon request.
4. **Designated Representatives:** The Union shall annually provide the County with a list of designated representatives authorized to use Association Leave Bank time. Only those listed may access the Bank.
5. **Additional Time:** Any time used beyond the annual allotment shall be unpaid unless otherwise approved in writing by the County.

ARTICLE III
MANAGEMENT RIGHTS

Except as specifically limited by the terms of this MOU, the County, through its Board of Supervisors, shall have all management rights provided by the United States Constitution, the California State Constitution, California State Law, and Colusa County Personnel Rules.

ARTICLE IV
GENERAL PROVISIONS

A. Strikes and Lockouts

1. The CCEA agrees that during the term of this Agreement, neither it nor its officers, agents or members will engage in, encourage, sanction, support or suggest any strikes, work stoppages, slowdowns, or any other similar actions which would involve suspension of, or interference with, the normal work of the County.

2. The County will not lockout employees during the term of this Agreement.

B. No Reprisals

1. The County shall not interfere with or discriminate against any employee by reason of his or her membership in the CCEA or activity approved by this Agreement, nor will the County discourage membership in the CCEA or encourage membership in any other employee organization.

2. The CCEA recognizes its responsibility as the exclusive representative and agrees to represent all employees without discrimination, interference, restraint or coercion.

3. The provisions of this Agreement shall be applied equally to all employees without discrimination as to political opinion or affiliation, race, color, religious creed, sex, marital status, actual or perceived sexual orientation, age, national origin, military, or veteran status, genetic information, gender, gender identity, gender expression, medical condition, physical or mental disability.

ARTICLE V
SALARIES

A. Salaries

1. **One-time Lump Sum Payment**: In lieu of a Cost-of-Living (COLA) adjustment in 2025 and 2026, members shall receive the following one-time lump sum payment to be issued no later than 30 days from the acceptance of the negotiated package:
   - Employees with at least 12 months of service with the County shall receive a lump sum payment of $1500.
   - Employees with less than one year of service with the County shall receive a lump sum payment of $750.

   The parties agree that these are one-time payments which do not meet the definition of compensation earnable nor does it qualify as any applicable special compensation for CalPERS reporting purposes. The County will issue this payment as a separate check from normal wages.

2. **Re-Opener Clause**: The County and CCEA shall agree to reopen negotiations limited to discussions regarding salary increases and lump sum payments only no later than September 1, 2026.

3. **Me-too Clause**: If during the term of this Memorandum of Understanding, the County grants any across-the-board or other uniform wage/salary increase (excluding regularly scheduled step increases, pre-existing contractually mandated increases, or any other legally mandated salary increase) to any employee or defined class of employees, including but not limited to employees of all recognized bargaining units, the County will grant the same wage/salary increase for all represented employees covered by this MOU on the same date, unless the wage/salary increase was granted in exchange for a reduction to a current benefit. For purposes of this provision, an across the board or uniform wage/salary increases includes any increases granted as percentages of existing wages/salaries, fixed dollar amounts, formula-based increase and tiered increases within identifiable employee classifications and groups, but excludes reclassifications and salary range adjustments for individual classifications.

B. Confidential Pay

1. Employees covered by this Agreement are confidential employees as defined in Colusa County Personnel Rules §1.122.4(c)(8) and will receive differential compensation in an amount equal to four percent (4%) of their base compensation annually.

C. Bilingual Pay

1. Bilingual Pay shall be paid to those qualified employees in positions where the County receives a benefit from the employee's ability in the second language. Effective December 1, 2025, qualified employees will receive bilingual pay based on their level of proficiency. Level I (speaking only) will be eligible for $80 per month and Level II (speaking, reading & writing) will be eligible for $100 per month.

2. The determination of County benefit shall be based on the Department Head's recommendation and approval of the Human Resources Director provided that such approval shall not be unreasonably withheld. Qualification shall be based on passing an approved language proficiency test modeled on the CHP proficiency test ("Test") and demonstrated proficiency in speaking, understanding, writing and reading the language.

   Employees currently receiving bilingual pay will be placed in a tier based on current test scores. If the original test is not available, an assessment will need to be completed; the employee will remain at Level I until the assessment takes place. For employees whose assessment cannot be completed by December 1, 2025, any resulting adjustment in pay will be retroactive to December 1, 2025 for those employees only.

D. Emergency Standby Pay and Call Back Pay

1. Emergency Standby Pay of $25.00 per day shall be paid to employees required to be available outside their normal work hours on a standby basis for "emergency work" whether or not called back to work. For purposes of this section, emergency work is work that must be performed in response to an unforeseen sudden event which requires immediate response to prevent, mitigate or eliminate a substantial hazard to life, health, or property.

Employees on emergency standby who are called back to perform emergency work shall be paid for all hours worked at 1.5 times their regular hourly rate of pay or equivalent compensatory time off (CTO) with a guaranteed minimum of two (2) hours; except on holidays the rate of 1.5 times the employee's regular hourly pay rate shall be paid in addition to the paid holiday.

2. Call Back Pay: Employees who are not on emergency standby but are called back to work outside their regularly scheduled work hours to perform approved work, shall be paid for all hours over forty (40) called back to work at 1.5 times their regular hourly rate of pay or equivalent CTO with a guaranteed minimum of two (2) hours. Employees who are called back on holidays shall receive call back pay in addition to holiday pay pursuant to Article VI paragraph C.

    a. Notwithstanding the above, Public Works Department employees receive 1.5 times their regular rate of pay for all hours worked during a call back relating to road emergencies with a two (2) hour minimum.

E. Overtime

1. Overtime for employees covered by this Agreement shall be as specified in Colusa County Personnel Rules 1.107.1 Sections "l" through "t", except as follows:

    a. Hours worked in excess of 40 hours per week shall be compensated at the employee's election either at the rate of 1.5 times the employee's regular hourly rate of pay or as compensatory time off ("CTO") calculated at the rate of 1.5 times the number of overtime hours worked provided:

    1) CTO hours may be accumulated to a maximum of 80 hours at any given time and may be taken, with the advance approval of the employee's supervisor, as paid time off during the same calendar year in which they are accumulated;

    2) CTO hours are paid at an employee's regular rate of pay at the time the CTO is paid out;

    3) All accumulated CTO hours will be utilized or cashed out no later than December 31 of each year; and

    4) All accumulated CTO hours will be cashed out upon separation from County employment.

F. Temporary Promotions (Temporary Upgrade Pay)

1. When a position becomes vacant and there is a need to fill the vacant position pending recruitment for a permanent appointment, the appointing authority may request the Human Resources Director to authorize a temporary promotion of a regular full or part-time employee from a, lower level job class that is directly related to the vacant position.

    For purposes of this section, "vacant position" does not refer to a position that is temporarily available due to an employee's leave of absence.

2. The temporarily promoted employee shall meet the minimum qualifications for the higher-level job class as determined by the Human Resources Director. Employees serving a temporary promotion may apply for regular promotion to fill the permanent vacancy.

3. Temporary promotions provided under this section are intended to comply with CA Government Code Section 20480 and described in CalPERS Circular Letter 200-021-18. Incumbents must be relieved of all duties of their former position in a temporary promotion. Temporary promotions must not exceed 960 hours in each fiscal year. The additional compensation paid to employees serving in a temporary promotion will be reported to CalPERS as temporary upgrade pay.

4. Any regular employee who is temporarily promoted under this section, will receive an increase in pay beginning with the first day of the temporary promotion. Increases in pay related to temporary promotion are calculated in the same manner as a regular promotion.

5. Upon termination of a temporary promotion, the temporarily promoted employee shall be restored to their prior permanent position as if the employee had never left. Employees who are temporarily promoted pursuant to this section and are also eligible for a merit increase in their permanent job classification shall be eligible for the merit increase while serving in the temporary promotion and their temporary promotional pay shall be adjusted to reflect the merit increase, if granted.

6. In the event a temporarily promoted employee receives a regular promotion to the vacant position without any lapse in time between the temporary promotion and the regular promotion, the employee's, time from the first day of temporary promotion shall count as service in the higher-level position for purposes of merit advancement in the higher salary range.

G. Out of Class Assignments:

An employee may be requested to perform an out of class assignment for a limited term. Employees assigned to perform clearly established duties of a higher-level position or classification shall receive out of class pay equal to 5% of their base pay for each day they perform the higher-level duties. Employees are not required to assume all duties of the higher-level position or classification to receive out of class pay. Out of class pay pursuant to this section is not reportable to CalPERS and is not considered as part of the CalPERS retirement benefit calculation.

H. Agricultural Equipment Operator Assignments

Employees within the Department of Agriculture who are routinely and consistently assigned to operate or drive specialized agricultural equipment or vehicles requiring a Class B driver's license, shall receive special assignment pay equal to 5% of their base pay for the working pay period the assignment was performed.

I. Inpatient Interventionist Assignments

Employees shall receive an enhanced standby incentive pay when voluntarily accepting a shift for Inpatient Interventionist.

Standby pay of $25 per 8-hour shift will be paid to employees within the Behavioral Health Department who are offered and accept, on a rotational basis, patient crisis sitter or patient driver shifts, which require these employees to be available outside their normal work hours on a standby basis for emergency work, whether or not called in to work. If called back to perform emergency work, employees shall be paid for all hours worked at 1.5 times their regular hourly rate of pay or equivalent compensatory time off (CTO) with a guaranteed minimum of two (2) hours, except on holidays, the rate of 1.5 times their regular hourly pay rate shall be paid in addition to the holiday.

Crisis Sitter shifts are available for the following BHS classification: therapists, mental health specialists, case managers, family specialists and peer specialists. Driver shifts are available for all permanent status BHS employees with a valid CA driver's license. No employee may accept shifts that will cause the employee to work a 7-day work week.

J. Compensation for Chaperones Working 24-Hour Schedule

This provision is to address compensation for employees serving as chaperones and working a 24-hour schedule. During each 24-hour workday, employees will be allowed a six (6) hour sleep period commencing at 11:30 PM and ending at 5:30 AM the following morning ("sleep time window"). If the employee receives at least five (5) consecutive hours of uninterrupted sleep during the sleep time window (defined as not performing the duties of a chaperone or performing other work-related business required by the County), the six (6) hour sleep time shall be excluded from hours worked during the 24-hour work day and the employee will be compensated for 18 hours of work.

If, however, the employee is required to perform the duties of a chaperone or other work-related business during the sleep time window period, all time spent performing such work shall be considered additional hours worked. In the event the employee cannot get at least five (5) hours of uninterrupted sleep during the sleep time window period, the entire six (6) hour sleep time shall be regarded as hours worked.

ARTICLE VI
HOLIDAYS

A. Holidays

1. Employees covered by this Agreement are entitled to the paid holidays listed below and specified in section 1.108.2(f) of the Colusa County Personnel Rules, which shall be considered to fall on the day-of-the-week designated as the day of celebration by the Board, unless they work in which case paragraph "D" below controls.

2. To take time off work for holidays or be compensated, the County recognizes the following holidays:

- January 1st, known as "New Year's Day."
- The third Monday in January, known as "Martin Luther King, Jr. Day."
- February 12th, known as "Lincoln Day."
- The third Monday in February, known as "Presidents' Day."
- March 31st, known as "Cesar Chavez Day."
- The last Monday in May, known as "Memorial Day."
- **June 19th, known as "Juneteenth"**
- July 4th, known as "Independence Day."
- The first Monday in September, known as "Labor Day."

- The second Monday in October, known as "Columbus Day."
- November 11th, known as "Veterans Day."
- The fourth Thursday of November, known as "Thanksgiving Day."
- The day after Thanksgiving.
- **December 24th, known as "Christmas Eve"**
- December 25th, known as "Christmas Day."
- Every day appointed by the President **(see Section C below)** or Governor as a day free of work including but not limited to a national day of mourning, thanksgiving, or other day no matter how designated of national or statewide significance unless otherwise decided by the Board.

a. If any of the holidays recognized by the county falls on a Saturday, the preceding Friday will be a holiday.

b. If any of the holidays falls on a Sunday, the following Monday will be a holiday.

B. Floating Holiday

1. Employees covered by this Agreement may each fiscal year select one floating holiday not identified above.

C. Newly Declared Federal Holidays

1. Effective October 1, 2025, the County will recognize newly declared single-occurrence federal observances, commemorative days, or national moments of remembrance that are not designated as recurring federal holidays established by an act of Congress or Presidential proclamation, provided the holiday is not designated as a permanent, recurring federal holiday observed, nationally. Permanent, recurring federal holidays must be bargained. The County will provide employees the day off with pay in observance of any such newly declared federal observances, under the following conditions:

    1. **Scope**: This provision applies only to federal holidays declared after September 30, 2025. It does not apply retroactively to holidays declared or observed prior to this date.
    2. **Holiday Scheduling**: The recognized single-occurrence federal observance, commemorative day, or national moment of remembrance that are not designated as recurring federal holidays will be observed in the same manner as other fixed-date or floating holidays already recognized by the County.
    3. **Board Approval**: In recognition that federally declared observances, commemorative days, or national moments of remembrance are frequently announced with minimal advance notice, such declarations shall be deemed to carry the implicit approval of the Board of Supervisors, and no additional Board action shall be required.

D. Holiday Compensation

1. Employees who work on any of the holidays listed above and specified in section 1.108.2(f) of the Colusa County Personnel Rules shall be paid as their full compensation for working on a holiday two (2) times their regular hourly rate for each hour worked with no additional pay for the holiday. This section does not apply to employees on standby who are called in to work in an emergency situation whose pay rate is governed by Article V Paragraph E of this Agreement.

2. If a holiday falls on a Saturday or Sunday and either day is part of an employee's scheduled workweek, the employee will receive his regular rate of pay and the day shall be counted as a regular workday.

3. If an employee resigns and the last day worked is the day before a holiday, the employee will not be paid for the holiday.

4. Temporary, extra help, limited term and seasonal employees required to work on a holiday shall be paid the regular rate of pay established for their positions.

5. If an employee is on a leave of absence without pay, the employee will not be paid for holidays except as required by law.

ARTICLE VII
LEAVES

A. Vacation

1. Employees covered by this Agreement are entitled to Vacation Leave with pay as provided in section 1.108.2(a) et seq. of the Colusa County Personnel Rules.

    1) The County vacation leave with pay plan functions under an accrual and usage plan (the plan). Under the plan, vacation will be earned and credited on a monthly-basis

    2) Employees are encouraged and expected to use all vacation in the year in which credited;

    3) Vacation shall be used in no less than fifteen-minute increments;
        a) Only accrued leave can be used. If there is no leave on the books, it cannot be used.

    4) Vacation must be scheduled in advance, subject to pre-approval by the employee's supervisor;

    5) Appointing authorities are charged with actively managing the vacation usage of their employees, to ensure vacation is used in accordance with this section;

    6) Vacation shall accrue on an hourly basis, based on an employee's anniversary date. An employee may accumulate a maximum of 1.5 times their annual accrual. An employee who accumulates vacation in excess of the maximum allowable hours will stop accruing vacation until their accumulated vacation hours fall below the maximum allowed.

    7) Vacation shall accrue and may be accumulated at the following rates:

Time in Service	Annual Vacation	Monthly Accrual 37.5-hour week	Monthly Accrual 40-hour week	Maximum Accumulation 37.5-hour week	Maximum Accumulation 40- hour week
0 through 3 yrs.	0 – 10 days	6.25 hours	6.666 hours	112.50 hours	120.00 hours
4 through 7 yrs.	15 days	9.375 hours	10.000 hours	168.75 hours	180.00 hours
8 through 11 yrs.	20 days	12.500 hours	13.333 hours	225.00 hours	240.00 hours
12+ yrs.	25 days	15.625 hours	16.666 hours	281.25 hours	300.00 hours

8) Vacation hours accumulated by an employee before January 1, 2009, will be carried forward in a separate employee vacation account, which may be referenced as the "pre-2009 vacation account," subject to the following:

a) Effective January 1, 2014, the value of each vacation hour included in an employee's pre-2009 vacation account will be calculated at the employee's current hourly rate of pay and will be frozen at that amount.

b) If, subsequent to January 1, 2014, an employee takes vacation-time off using vacation hours credited to the pre-2009 vacation account, they will be granted vacation time off on an hour-for-hour basis, without regard for their current rate of pay.

9) Legal holidays occurring during vacation leave will not be charged as vacation leave but as a holiday;

10) Employees may request conversion into cash payments of up to forty (40) hours of accrued vacation not more than once in a fiscal year. Employees may also elect such cash conversion to be deposited into a deferred compensation account in the employee's name. Employees must retain a minimum of forty (40) hours in their leave bank to make a conversion request.

11) Part-time employees shall accrue and may accumulate vacation leave on a pro-rata basis equal to their prorated service time and their prorated hours worked;

12) Upon termination, the employee or their estate will be paid the monetary value of the earned unused vacation in the employee's vacation account.

13) Starting from the first complete pay period after October 1, 2023, all employees will be able to include their previous public service experience for calculating vacation accrual. Verifiable experience is counted in complete years (equivalent to twelve [12] months). Each employee shall be credited for the purpose of accrual, with years of service at other public agencies on a year for year basis. The maximum vacation allowance will correspondingly align with the updated years of service for vacation.

B. Sick Leave

1. Employees covered by this Agreement are entitled to accrue, accumulate and use Sick Leave with pay as provided in section 1.108.2(b) et seq. of the Colusa County Personnel Rules except as follows:

a. Effective January 1, 2017, each County employee who separates from County service will be compensated for unused sick leave based on the formula specified in section 1.108.2(b) et seq. except that:

i. Employees who separate from County service for any reason with unused sick leave that was accrued and accumulated before December 31, 2009 may choose to receive the entire amount owed in cash pursuant to section 1.108.2(b)(6) et seq. or may

choose to have the entire amount owed deposited into a county offered IRC 457 Plan subject to the limitations of such Plan.

b. Effective January 1, 2017, employees who retire from County service with unused sick leave that was accrued and accumulated after December 31, 2009 will be compensated based on the formula and conditions which follow:

i. An employee who retires with at least 15 years of Colusa County service and a minimum combined (old bank plus new bank) sick leave balance of 200 hours at the time of retirement will receive an amount equal to twenty-five percent (25%) of his/her current base hourly salary for all qualified hours.

ii. An employee who retires with at least 20 years of Colusa County service and a minimum combined (old bank plus new bank) sick leave balance of 250 hours at the time of retirement will receive an amount equal to fifty percent (50%) of his/her current base hourly salary for all qualified hours.

iii. An employee who retires with at least 25 years of Colusa County service and a minimum combined (old bank plus new bank) sick leave balance of 300 hours at the time of retirement will receive an amount equal to seventy-five percent (75%) of his/her current base hourly salary for all qualified hours.

iv. An employee who retires with at least 30 years of Colusa County service and a minimum combined (old bank plus new bank) sick leave balance of 350 hours at the time of retirement will receive an amount equal to one hundred percent (100%) of his/her current base hourly salary for all qualified hours.

v. Employees who are compensated for unused sick leave pursuant to paragraphs b.i. through b.iv. above may have any amount owed deposited into a County offered IRC 457 Deferred Compensation Plan subject to the limitations of such plan and/or to have any amount owed deposited into the County-sponsored Health Reimbursement Arrangement subject to the limitations of the HRA plan document.

1. For the purposes of this benefit only, County employees who are elected to a County office will be compensated as though they had “retired” effective the date they assume the County elected office.

C. Bereavement Leave

1. Bereavement leave will be granted in the case of death in the immediate family of the employee or spouse, pursuant to Colusa County Personnel Rules 1.108.2(d).

D. Jury Duty or Court Witness

1. Employees who are required to serve on jury duty shall receive full pay, but shall remit to the County any compensation, except reimbursement for parking, meals, mileage or lodging which may be received for such service.

2. An employee who is required to appear as a witness in a court case which involves the County or County business shall receive full pay, but shall remit to the County any witness fees, including fees received as an expert witness, except reimbursement for parking, meals, mileage or lodging which may be received for such service.

E. Education Leave

1. Upon the recommendation of the department head, the Board of Supervisors may grant an employee up to nine (9) months of educational leave without pay. The department head shall consider the following criteria in making recommendation to the Board to grant educational leave: Whether

    a. Education or training will increase on-the-job skills; and

    b. Education or training will increase the employee's qualifications for promotion; and

    c. The employee indicates a desire to make County employment a career; and

    d. The employee has demonstrated high motivation for self-improvement; and

    e. The employee has shown indications of superior work performance in present position; and

    f. The employee has shown evidence of promotional potential indicating the capacity to perform in a more responsible position; and

    g. The employee has shown potential, motivation and suitability for further educational opportunity.

F. All Leaves Recognized By Law

As stated in Colusa County Personnel Rules section 1.108.2 employees covered by this Agreement may take any leave recognized by law.

1. Employees covered by this Agreement, solely at their option, may elect to retain up to forty (40) hours of accrued vacation leave while on a Medical and Family Leave lasting longer than three (3) days and be placed in leave without pay status prior to exhausting all accrued vacation leave. Unless the employee notifies the County of the election to retain vacation leave at the time of Medical and Family Leave, all paid leave will run concurrently for the entire Medical and Family Leave and must be exhausted prior to leave without pay. The County's Medical and Family Leave Policy (Policy #308) and §1.108 of the Colusa County Personnel Rules shall be interpreted and applied in a manner consistent with this provision.

ARTICLE VIII
HEALTH AND WELFARE

The County provides the health and welfare benefits identified in the Colusa County Personnel Rules to all bargaining unit employees subject to the terms which follow:

A. Medical Insurance

1. Except as provided in Section H, below the County will continue to contract with the Public Employees' Retirement System (CalPERS) for the purpose of providing medical insurance benefits for active employees in accordance with the Public Employees Medical and Hospital Care Act (PEMHCA) and eligible retired employees. Eligibility of active and retired employees and the dependents of active and retired employees to participate in this program shall be in accordance

with regulations promulgated by CalPERS.

2. Pursuant to Government Code Section 22892 (a) the County will contribute the statutory minimum employer contribution (MEC) on behalf of each active employee and each retiree who subscribes for coverage.

3. Except as provided herein, represented employees shall purchase medical insurance through the CalPERS Medical Program.

    a. Represented employees who have alternative medical insurance coverage from another source, which provides "Minimum Essential Coverage" as that term is defined by the agencies responsible for the administration of the Affordable Care Act, may, by providing written proof of such alternative coverage to the County, opt out of the CalPERS Medical Program. Employees who opt out of the CalPERS Medical Program shall be required to provide written confirmation of alternative Minimum Essential Coverage annually thereafter, during the CalPERS open enrollment period. If such confirmation is not provided, the employee shall be required to enroll in the CalPERS Medical Program.

B. Dental Insurance

1. The County will continue to make dental insurance available to active employees and their eligible dependents of active employees through the County sponsored dental plan(s). The County's contributions toward such dental insurance shall be capped at $45.00 per month.

2. Except as provided herein, represented employees shall be required to purchase dental insurance through the County sponsored plan. Represented employees who have dental insurance coverage from another source may, by providing written proof of such alternative coverage to the County, opt out of the dental plan. Employees who opt out of the dental plan shall be required to provide written confirmation of alternative coverage annually thereafter, during the dental plan open enrollment period. If such confirmation is not provided, the employee shall be required to enroll in the dental plan.

    a. Employees who were hired prior to January 1, 2013 and who opt out of the dental plan pursuant to Section B.2. above, shall be provided a $45.00 per month cash-in-lieu benefit which the employee may deposit into an appropriate account within the County Cafeteria Plan or may be taken as a cash payment that will be applied to the employee's monthly paycheck. Amounts taken as cash will be treated as taxable income.

C. Cafeteria Plan

1. The County provides a Cafeteria Plan available to all represented employees. At a minimum, the County Cafeteria Plan provides non-elective County contributions that may be used to pay all or a portion of the monthly premium for county-sponsored group health insurance, and the pre-tax payments of the employee share of county-sponsored group health insurance premiums. The County Cafeteria Plan also includes a Flexible Spending Account, a Health Reimbursement Account, and a Dependent Care Account into which employees may make pre-tax contributions through the execution of Salary Reduction Agreements. Participation in the County Cafeteria Plan

shall be pursuant to the terms, conditions and restrictions of the Plan Administrator and shall be subject to the terms that follow.

a. Effective December 1, 2025 and each December 1st thereafter, the County will make non-elective contributions into the Cafeteria Plan on behalf of each represented employee who is enrolled in the CalPERS medical plan pursuant to Section A.3., sufficient that when combined with the MEC totals the following:
   i. For employees who are enrolled in employee only coverage, the County will contribute a dollar amount sufficient that when combined with the MEC is the equivalent of the actual premium, for employee only coverage based upon CalPERS Gold plan.
   ii. For employees who are enrolled in employee plus one coverage, the County will contribute a dollar amount sufficient that when combined with the MEC is the equivalent of the actual premium, for employee plus one coverage based upon CalPERS Gold plan.
   iii. For employees who are enrolled in family coverage, the County will contribute a dollar amount sufficient that when combined with the MEC is the equivalent of the actual premium for family coverage based upon CalPERS Gold plan.

c. In the event an employee has excess County Cafeteria contributions (before or after AFLAC or Colonial), the dollar equivalent thereof shall be contributed to the employee's Health Reimbursement Account (HRA) to the extent allowable by law.

d. Upon expiration of the MOU, County contributions shall remain at the 2027 contribution rates until such time as an alternative agreement is reached or alternative terms are imposed following the exhaustion of impasse and fact-finding procedures, if applicable.

D. Medical In Lieu

1. Subject to Section D.2 below, employees who, pursuant to Section A.3 a, above elect not to receive County-sponsored CalPERS health benefits, the County will provide a monthly In-lieu benefit which the employee may deposit into an appropriate account within the County Cafeteria Plan or may be taken as a cash payment that will be applied to the employee's monthly paycheck. Amounts taken as cash will be treated as taxable income.

   a. Employees hired prior to January 1, 2013 and who qualify for the above-described In-lieu benefit shall receive $715 per month.

   b. Employees hired after December 31, 2012 and who qualify for the above-described In-lieu benefit shall receive $333 per month as of January 1, 2024 and $400 per month as of January 1, 2025.

E. Part Time Employees

1. Part time employees regularly scheduled to work twenty (20) or more, but fewer that thirty (30) hours a week will be eligible for the health, dental, vision and Cafeteria Plan benefits appropriate to their hire-date equal to the pro rata relationship between the hours regularly scheduled to work and full time. Benefits for employees who are regularly scheduled to work thirty (30) hours or more per week will not be prorated.

   a. Part time employees regularly scheduled to work twenty (20) hours or more but fewer than thirty (30) hours each week are not required to accept county-sponsored health benefits and are not eligible for cash-in-lieu benefits.

b. Part time employees regularly scheduled to work thirty (30) hours or more each week are subject to the provisions of Section A.3. above and may be eligible for cash-in-lieu benefits if they satisfy the requirements of Section A.3a.

F. Vision Care and Employee Assistance Plans

1. Vision insurance shall be provided in accordance with the Vision Plan and shall include at a minimum an annual examination and the replacement of lenses and frames every twelve (12) months. The County will contribute one-hundred percent (100%) of the monthly premium for employee-only coverage. Employees may enroll eligible family members at the employee's expense and subject to the rules of the insurance provider.

2. The County shall provide to each represented employee an Employee Assistance Plan that includes up to six (6) visits during each calendar year with a designated Health Care Provider. Such Employee Assistance shall be strictly confidential, and the employee need only show proof of employment with Colusa County to receive this benefit.

G. Health Reimbursement Arrangement

1. The County will make an IRS qualified Health Reimbursement Arrangement (HRA) available for eligible represented employees who retire from the County and enroll in the County-Sponsored Health Plan. Subject to the conditions described below, the County will make monthly contributions into the HRA on behalf of each eligible retiree.

   a. For retirees who were hired before January 1, 2013 and who retired prior to the execution of this MOU, the County will contribute $128.26 per month to the retirees HRA. This retiree HRA contribution is separate from and in addition to the PEMHCA Minimum Employer Contribution (MEC).

   b. For employees hired before January 1, 2013 and who retire following the execution of this MOU, the County will contribute $128.26 per month, less any future increases to the MEC, to the retirees HRA, so that the combination of the MEC and the retiree HRA contribution does not exceed $267.26 per month. This retiree HRA contribution is separate from the MEC.

   c. Employees hired after January 1, 2013 and who subsequently retire are not eligible for the $128.26 retiree HRA contribution provided herein. Such retirees receive only the MEC.

2. Effective October 1, 2025, the County will contribute $**75** per month into individual IRS qualified Health Reimbursement Arrangement (HRA) accounts for each active employee. This contribution is in addition to any excess cafeteria funds. Employees will be responsible for any administrative fees associated with their HRA account. Upon retirement the remaining balance of an active employee's HRA will be rolled into the employee's retiree HRA.

H. Employee Wellness Program

The County will reimburse employees covered by this Agreement for up to 15% of their monthly gym membership fee through the Trindel Insurance program. The County, through the Human Resources Department, will provide information to employees about this program.

I. Health Care Compliance

1. The Parties intend to comply with legislative and regulatory requirements for the provision of health care insurance and benefits. If, during the term of this MOU, it is determined that the County is out of compliance with any health care related mandate or mandates, the County will take the steps necessary to comply with the law.

2. Before taking action pursuant to paragraph 1 above, the County will notify the Association of the issue and the County's intended action. Time permitting and at the request of the Association, County representatives will meet with Association representatives before acting. If the actions deemed necessary to comply with the law impact employee benefits, the County and the Association will meet and confer regarding such impacts.

ARTICLE IX
RETIREMENT

A. Retirement Plans

1. CalPERS Retirement Benefits

a. The County's contract with CalPERS provides the following retirement benefits for bargaining unit employees. CalPERS determines an employee's membership category as classic or new.

1. Tier 1 – Retirement benefits for confidential "classic" members hired prior to December 31, 2012 shall receive the following CalPERS benefits.

- 3% @60 retirement formula
- Single highest year final compensation period
- Employee pays an 8% member contribution

2. Tier 2 – Retirement benefits for confidential "new" members hired on or after January 1, 2013 are as follows:

- 2% @ age 62 retirement formula
- Three-year average final compensation period
- Employee pays 50% of the normal cost as determined by CalPERS

b. To the extent allowable by CalPERS, the County will continue to provide the following optional retirement enhancements:

- Military Service Credit as Public Service for Miscellaneous and Safety employees pursuant to Government Code Section 21024.

- Pre-Retirement Option 2W Death Benefit pursuant to Government Code Section 21548.

c. Member's contribution toward retirement costs are paid subject to the provisions of section 414(h)(2) of the Internal Revenue Code.

2. Should the statutory minimum employee member contribution rates for the above retirement plans

be increased through State legislative or CalPERS administrative action during the term of this Agreement, either party may request to reopen this section to negotiate possible changes to the employee contribution rates specified in this MOU. Unless required by law, the employee contribution rates specified above will not change during the term of this MOU without mutual agreement of the parties.

B. Internal Revenue Code Section 457 Deferred Compensation Plans

1. The County will continue to make IRC section 457 deferred compensation plans (IRC 457 Plans) available to represented employees, subject to the terms and conditions of plan sponsors which, in some cases, may require minimum employee contributions. Employee participation in such plans is voluntary.

2. Except for the matching contributions provided below, the County shall not make contributions on behalf of represented employees. The County will match employee contributions to a county-offered IRC 457 Plan and effective October 1, 2025 contribute increased amounts as follows:

   a. For employees with up to seven (7) years of county service, $60.00 per month. To qualify for matching contributions, employees must contribute an amount equal to or greater than the plan minimum contribution.

   b. For employees with seven (7) to fifteen (15) years of county service up to $80.00 per month. To qualify for matching contributions, employees must contribute an amount equal to or greater than the plan minimum contribution.

   c. For employees with more than fifteen (15) years of county service up to $100.00 per month. To qualify for matching contributions, employees must contribute an amount equal to or greater than the plan minimum contribution.

3. Specific information regarding each of the available IRC 457 Plans may be obtained from the Human Resources Department.

ARTICLE X
MISCELLANEOUS

A. Personal Protective Equipment.

1. Employees may be required to wear personal protective equipment, including but not limited to prescription safety eyeglasses, which will be provided by the County at no cost to employees. If a Department Head determines that employees are required to wear safety footwear, the County will, on an annual basis, reimburse the employee for the cost of such footwear in annual reimbursements up to $200 for each 12-month period from July 1 to June 30; subject to the County' s claims procedures, with no benefit carry-over, and employees on any type of long-term leave of absence will be ineligible for reimbursement until they return to full duty status.

B. Required Licenses.

1. Employees are responsible for meeting the requirements and for paying any fees involved in obtaining necessary licenses, certificates, permits, and registrations. However, where such licenses, certificates, permits, and registrations are required in order for the employee to maintain his/her current position, reimbursement may be sought from his/her employer upon proof of successful completion of tests or other requirements. Department heads are

responsible for informing their employees that their duties require them to obtain such licenses, etc., and for seeing that their employees obtain the licenses. Department heads should make available relevant information regarding applications, fees, and qualifications for licenses required by positions within their department.

C. Layoffs.

1. Layoffs in non-general fund Departments shall be contained within those Departments with no right for laid off employees to bump outside the Departments.

ARTICLE XI
SAVINGS

If any provision of this Agreement should be held invalid by operation of law or by tribunal of competent jurisdiction, or if compliance with or enforcement of such provision shall be restrained by such tribunal, the remainder of the Agreement shall remain in full force and effect.

ARTICLE XII
PERSONNEL RULES

Upon implementation of this Agreement, any terms and conditions of employment not specifically discussed herein shall be governed by the provisions of the Colusa County Personnel Rules.

ARTICLE XIII
FULL UNDERSTANDING

This Agreement constitutes the full understanding of the parties with respect to the matters set forth herein. The parties further agree that any amendment to this Agreement during the term of the Agreement must be reduced to writing and may be done only by mutual consent of the parties.

ARTICLE XIV
TERM

This Agreement shall remain in full force and effect from October 1, 2025, through and including September 30, 2027 provided that the County and/or the CCEA shall have the right to reopen negotiations limited to discussions regarding salary increases and lump sum payments, only, no later than September 1, 2026.

Dated: _____
Colusa County Employee Association

_____
Ann Nordyke
President

Dated: _____
County of Colusa

_____
Daurice Kalfsbeek-Smith
Chair of the Board

ATTEST: Marcos Kropf, Interim Clerk to the Board of Supervisors

Patricia Rodriguez, Deputy Clerk

Madison Williams
CCEA Chief Negotiator

Dar Rhodes
HR Director / County Chief Negotiator

Colusa County

Agenda Request Form

Item ID#: 2025-69 **Agenda Date:** 11/4/2025 **Item III.1**

BEHAVIORAL HEALTH (BH)

Approve Agreement with **Evolve Growth Initiatives, LLC, dba Evolve Treatment Centers** for residential treatment services for teens, effective September 1, 2025.

Detailed Description/Background of Request
The Behavioral Health Department is requesting a new agreement with Evolve Growth Initiatives, LLC, dba Evolve Treatment Centers . Evolve will provide the county with residential treatment services for teens.

Evolve is a clinician-led organization, with a team of experts who create individualized treatment plans for teens. Evolve deploys a variety of therapies for teens and their families in order for them to thrive together. Evolve uses an evidence-based and behavioral approach to treatment that includes psychiatry, with a significant focus on DBT skills training, and other therapeutic methods based on the individual needs of the teen. Evolve provides a safe and structured environment where teens develop valuable skills and insights, ensuring their gains in treatment are maintained long after being discharged from the residential treatment program.

Behavioral Health requests the term of the contract to be September 1, 2025, through September 30, 2030. The maximum compensation will be $180,000 per fiscal year.

Fiscal Impact/Funding Source
Budgeted 003-55270-713-0.
Not to exceed $180,000 per fiscal year.

Action for the Clerk
None.

Prior Board Action
Please obtain signatures, number contract and send to:

Evolve Adolescent Behavioral Health
Attn: Eddy Lai, CFO
300 N Pacific Hwy Suite 2060
El Segundo, CA 90245

Attachments:

1. Evolve Adolescent Behavioral Health Services Agreement
2. Attachment A - Evolve Scope of Services
3. Attachment B - HIPAA BUSINESS ASSOCIATE ADDENDUM

RESIDENTIAL TREATMENT SERVICES CONTRACT

This Residential Treatment Services Contract ("Contract") is between the County of Colusa ("County"), a political subdivision of the State of California and Evolve Growth Initiatives, LLC, dba Evolve Treatment Centers (“Contractor"), a Delaware Limited Liability Company.

1. **Services to be Performed:** Contractor agrees at its own expense to furnish all equipment, labor and materials necessary to provide County with residential treatment services for teens, as more specifically detailed in Attachment "A.”

2. **Term:** This Contract shall begin on September 1, 2025, and shall terminate on September 30, 2030.

3. **Compensation:** County will pay Contractor compensation not to exceed $180,000 per fiscal year, as provided for in Attachment “A.” Compensation will be paid in accordance with paragraph 4, Method of Payment. Any modification to the negotiated rates specified in this Contract do not require a modification but must receive approval from both the Director of Behavioral Health and the Purchasing Agent prior to implementation.

4. **Method of Payment:** At the end of each month, Contractor shall provide County with an invoice for the services provided in the preceding month. Upon receipt of an invoice, County shall process payment to Contractor as provided for by County's established policies and procedures, and payment will be issued accordingly for undisputed invoices.

   A. **Invoices shall:**
      1) Be prepared on Contractor’s letterhead.
      2) Bear Contractor’s name as shown on the contract.
      3) Bear the contract number.
      4) Itemize the costs incurred.
      5) Include a summary of the services provided.
      6) Be signed by an authorized official, employee, or agent certifying that the claim represents actual expenses for the services performed under this Contract.

5. **Professional Ability of Contractor and Standards of Performance:** Contractor represents that it is qualified and licensed to perform the services to be done as required in this Contract. County relies upon the representations of Contractor regarding professional training, licensing, and ability to perform the services as a material inducement to enter into this Contract.

   A. Services shall be provided by Contractor without the advice, control or supervision of County. Contractor shall have sole discretion and control of Contractor's services and the manner in which they are performed.

   B. Acceptance of work or payment of invoice by County does not operate to release Contractor from any responsibility to perform work to professional standards.

   C. Contractor shall provide properly skilled professional and technical personnel to

perform all services under this Contract.

6. **Contractor's Books and Records:** Contractor shall maintain any and all ledgers, books of account, invoices, vouchers, canceled checks, and other records or documents evidencing or relating to charges for services, or expenditures and disbursements charged to County for a minimum period of five (5) years, or for any longer period required by law, following audit, or from the date of final payment to Contractor under this Contract, whichever is later.

   A. Contractor shall maintain all documents and records which demonstrate performance under this Contract for a minimum period of five (5) years, or for any longer period required by law, from the date of termination or completion of this Contract.

   B. Any records or documents required to be maintained pursuant to this Contract shall be made available for inspection or audit at any time during regular business hours, upon written request by County Counsel or other designated representative of County. Copies of such documents shall be provided to County for inspection at the office of the requesting county officer unless it is impractical to do so; in which case the records shall be made available at Contractor's address indicated for receipt of notices in this Contract.

   C. Where County has reason to believe that such records or documents may be lost or discarded due to dissolution, disbandment, or termination of Contractor's business, County may, on written request, require that custody of the records be given to County and that the records and documents be maintained by County at the Board of Supervisors offices. Access to such records and documents shall be granted to any party authorized by Contractor, Contractor's representatives, or Contractor's successor-in-interest.

7. **Independent Contractor:** Contractor is an independent contractor, not an employee of County. Nothing contained in this Contract, or any document executed in connection with this Contract, shall be construed to create an employer-employee, partnership or joint venture relationship between County and Contractor nor to allow County to exercise discretion or control over the manner in which Contractor performs the work or services that are the subject matter of this Contract; provided, however, the work or services to be provided by Contractor shall be provided in a manner consistent with reaching County's objectives in entering this Contract.

8. **Debarment and Suspension:**

   A. Certification Regarding Debarment: By signing this Contract, the Contractor certifies that neither the Contractor nor any of its principals are currently debarred or suspended by any Federal department or agency.

   B. Certification of Lower Tier Contractors Regarding Debarment: By administering any lower-tier subcontract exceeding $25,000 as a covered transaction under this Contract, the Contractor certifies that:

1) The Contractor has verified that each lower-tier subcontractor participating in a covered transaction is not presently debarred or suspended from participation in this Contract by any Federal department or agency.

2) Prior to entering into any lower-tier subcontract exceeding $25,000, the Contractor shall require each proposed subcontractor to disclose, in writing, whether, as of the time of award of the subcontract, the subcontractor or its principals is debarred or suspended by the Federal Government. The Contractor may accomplish this by:

   a. Checking the System for Award Management at website: http://www.sam.gov.
   b. Collecting a certification statement similar to the Certification Regarding Debarment, above.
   c. Inserting a clause or condition in the covered transaction with the lower tier contract.

9. **Indemnity and Liability:** Each party shall indemnify, defend, and hold the other party and its directors, officers, employees, and agents harmless against any claims of any kind, arising or alleged to arise out of the willful misconduct, negligent acts, omissions, or violations of law by the party.

10. **Insurance:** Contractor, at its own cost, agrees to maintain, for the duration of this Contract, the following insurance policies with insurers possessing a Best's rating of no less than A:VII:

A. Workers' Compensation Coverage: Contractor shall maintain Workers' Compensation Insurance and Employer's Liability Insurance for its employees in accordance with the laws of the State of California. In addition, Contractor shall require each subcontractor to similarly maintain Workers' Compensation Insurance and Employer's Liability Insurance in accordance with the laws of the State of California for all of the subcontractors' employees. Any notice of cancellation or non-renewal of all Workers' Compensation policies must be received by County at least thirty (30) days prior to such change.

B. General Liability Coverage: Contractor shall maintain commercial general liability insurance in an amount of not less than two million dollars ($2,000,000) per occurrence for bodily injury, personal injury, and property damage. If a commercial general liability insurance form or other form with a general aggregate limit is used, either the general aggregate limit shall apply separately to the work to be performed under this Contract or the general aggregate limit shall be at least twice the required occurrence limit.

C. Automobile Liability Coverage: Contractor shall maintain automobile liability insurance covering bodily injury and property damage for all activities of the contractor arising out of or in connection with the work to be performed under this

Contract, including coverage for owned, hired, and non-owned vehicles, in an amount of not less than one million dollars ($1,000,000) for each accident for bodily injury or property damage.

D. Professional Liability Insurance (Errors and Omissions): Contractor shall maintain Professional Liability Insurance for Errors and Omissions coverage in an amount of not less than $2,000,000 in aggregate. The insurance coverage provided by Contractor shall contain language providing coverage for up to three 3 years following the completion of the contract in order to provide insurance coverage for the hold harmless provisions herein if the policy is claims made.

E. Policy Endorsements: All insurance, except workers' compensation, shall include an endorsement or an amendment to the policy of insurance:

1) Naming County, its elected officials, officers, employees, agents and volunteers as additional named insureds with respect to liability arising out of any and all work performed by or on behalf of the Contractor under this Contract;

2) Providing that Contractor's insurance shall be the primary insurance as respects County, its elected or appointed officers, officials, employees, agents and volunteers. Any insurance maintained by County, including any self-insured retention County may have, shall not be called upon to contribute to a loss covered by Contractor's insurance;

3) Providing the policy of insurance shall act for each insured and additional insureds as though a separate policy had been written for each, except with respect to the limits of liability of the insuring company;

4) Providing that the insurer waives all rights of subrogation against County, its elected or appointed officers, officials, employees, agents or volunteers;

5) Providing any failure to comply with the reporting provisions of the policy of insurance shall not affect coverage provided to County, its elected or appointed officers, officials, employees agents, or volunteers;

6) Providing broad-form contractual liability coverage insuring contractor's indemnity obligations under this contract; and

7) Providing that coverage under the policy shall not be suspended, voided, reduced or cancelled in coverage or in limits without thirty (30) days written notice certain to County.

F. Deductibles and Self-insured Retentions: Any deductibles or self-insured retentions must be declared to and approved by County before work begins. At County's option, Contractor shall demonstrate financial capability for payment of such deductibles or self-insured retentions.

G. **Proof of Coverage:** At the time of execution of this contract, Contractor shall furnish County with copies of its insurance policies and endorsements affecting coverage required by this Contract.

11. **Performance Standards:** Contractor shall use the standard of care in its profession and comply with all applicable federal, state and local laws, codes, ordinances and regulations.

12. **Licenses:** Contractor represents and warrants to County that it has all licenses, permits, qualifications, insurance, and approvals of whatsoever nature which are legally required of Contractor to practice its trade and/or profession. Contractor represents and warrants to County that Contractor shall, at its sole cost and expense, keep in effect or obtain at all times during the term of this Contract, any licenses, permits, insurance, and approvals which are legally required of Contractor to practice its trade and/or profession.

13. **Controlling Law Venue**: This Contract is made in the County of Colusa, State of California. The parties specifically agree to submit to the jurisdiction of the Superior Court of California for the County of Colusa.

14. **Written Notification**: Any notice, demand, request, consent, approval, or communication that either party desires or is required to give to the other party shall be in writing and either served personally or sent prepaid, first class mail. Any such notice, demand, etc., shall be addressed to the other party at the address set forth below. Either party may change its address by notifying the other party of the change of address. Notice shall be deemed communicated within 48 hours from the time of mailing if mailed as provided in this section.

If to County:	Colusa County Behavioral Health Attention: Director 162 E. Carson Street Colusa, CA. 95932
If to Contractor:	Evolve Adolescent Behavioral Health Attention: Eddy Lai, CFO 300 N Pacific Hwy Suite 2060 El Segundo, CA. 90245

15. **Entire Contract**: This Contract constitutes the complete and exclusive statement of contract between County and Contractor. All prior written and oral communications, including correspondence, drafts, memoranda, and representations, are superseded in total by this Contract.

16. **Amendments**: This Contract may be modified or amended only by a written document executed by both Contractor and County and approved as to form by the County Counsel.

17. **Waiver**: No failure on the part of either party to exercise any right or remedy provided for by this Contract shall operate as a waiver of any other right or remedy that party may have.

18. **Execution**: This Contract may be executed in several counterparts, each of which shall

constitute one and the same instrument and shall become binding upon the parties.

19. **Assignment & Subcontracting**: The parties recognize that a substantial inducement to County for entering into this Contract is the professional reputation, experience, and competence of Contractor. Assignments of any or all rights, duties or obligations of Contractor under this Contract will be permitted only with the express consent of County. Contractor shall not subcontract any portion of the work to be performed under this Contract without the written authorization of County. If County consents to such subcontract, Contractor shall be fully responsible to County for all acts or omissions of the subcontractor. Nothing in this Contract shall create any contractual relationship between County and subcontractor nor shall it create any obligation on the part of County to pay any monies due to any such subcontractor unless otherwise required by law.

20. **Termination**: This Contract may be terminated for the following reasons:

    A. Immediately for cause if either party fails to perform its responsibilities under this Contract in a timely and professional manner or violates any of the terms or provisions of this Contract; or

    B. By County without cause upon fifteen (15) days written notice of termination.

21. **Partial Invalidity**. If any provision of this Contract is held to be invalid, void, or unenforceable, the remainder of the provision and/or provisions shall remain in full force and effect and shall not be affected or invalidated.

22. **Attachments:** All attachments referred to are incorporated and made part of the Contract. Attachments include:

    A. Attachment "A"- Scope of Services
    B. Attachment "B"- HIPAA Business Associate Addendum

Signatures on next page.

COUNTY OF COLUSA

_____Date:_____
Daurice K. Smith, Chair

APPROVED AS TO FORM

_____
Richard Stout, County Counsel

EVOLVE ADOLESCENT BEHAVIORIAL HEALTH

_____Date:_____
Signature

_____
Printed Name and Title

ATTEST: Marcos Kropf, Interim Clerk of the Board of Supervisors

By _____
Patricia Rodriguez, Deputy

Attachment A
Scope of Services

Locations:

- Sacramento RTC:
  - Fair Oaks
  - Arden Oaks
- East Bay RTC:
  - Danville
  - Lafayette
  - Walnut Creek
- Comprehensive DBT:
  - Tarzana Aura
  - Tarzana Vanalden

Rates per day:

- Residential Treatment (RTC): $2000.00 per day
- Partial Hospitalization (PHP): $1200.00 per day (this program is 5 days per week)
- Intensive Outpatient (IOP): $600.00 per day (this program is 4 days per week)

Scope of Services:

- RTC weekly services include:
  - 3 full individual sessions with their primary therapist
  - 2 family sessions with their primary therapist
  - 1 with the client
  - 1 without the client
  - Weekly Parent Support Group (optional)
  - Weekly Psychiatric Consultation
  - Onsite Nursing
  - 15+ Core Clinical Groups Weekly
  - 4 DBT Skills Training Groups Weekly
  - Experiential Therapy: Equine, Art, Music, Surf (depending on location), and more
  - Ability to offer 1:1 patient monitoring if needed
  - Intensive Case Management Support and Aftercare Planning
  - Weekly treatment team consultation that includes psychiatry, primary therapist, discharge coordinator, education coordinator, and program director
  - Education support Monday - Friday with the assigned Academic Coordinator
  - Staffing ratios of 1:3 at a minimum, during wake hours, that changes to 1:1 or 1:2 based on administrative support
  - All meals are prepared by our on-site Chef
  - Room and board

Attachment A
Scope of Services

Residential Treatment

Up to 6 Clients per Program

Average Length of Stay: 45 to 60 Days

24/7 Support and Supervision

- Individual Therapy: 3x Weekly
- Family Therapy: 2x Weekly
  - Weekly Parent Support Group
- Weekly Psychiatric Consultation
- Onsite Nursing
- 15+ Clinical Groups Weekly
  - 4 DBT Skills Training Groups Weekly
- Experiential Therapy: Equine, Art, Music, and more
- Academic Support 2 Hours Daily
- Ability to offer 1:1 patient monitoring if needed
- Intensive Case Management Support and Aftercare Planning

Partial Hospitalization

Up to 12 Clients per Program

Average Length of Stay: 20 Days

Full-Day Program:
Monday-Friday 9:00 AM to 4:00 PM

- Individual Therapy: 2x Weekly
- Family Therapy: 1x Weekly
  - Weekly Parent Support Group
- Weekly Psychiatric Consultation
- 20+ Hours of Core Clinical Programming Weekly
  - 90-Minute DBT Skills Training Groups: 2x Weekly
- Experiential Therapy: 2x Weekly (art and music)
- Academic Support: 2 Hours Daily
- Intensive Case Management Support and Aftercare Planning

Intensive Outpatient

Up to 12 Clients per Program

Average Length of Stay: 60 Days

Afterschool Program:
Monday-Thursday, 4:00 PM to 7:00 PM

- Individual Therapy: 1x Weekly
- Family Therapy: 1x Weekly
  - Weekly Multi-Family Group
  - Weekly Parent Support Group
- Psychiatric Consultation Monthly
- 9+ Hours of Core Clinical Programming Weekly
  - 90-Minute DBT Skills Training Group Weekly
- Experiential Therapy Weekly (art or music)
- Intensive Case Management Support and Aftercare Planning

ATTACHMENT B

HIPAA BUSINESS ASSOCIATE ADDENDUM

The purpose of this Attachment is to satisfy certain standards and requirements of HIPAA and the HIPAA regulations, and other applicable laws.

Definitions

Catch-all definition:

The following terms used in this Attachment shall have the same meaning as those terms in the HIPAA Rules: Breach, Data Aggregation, Designated Record Set, Disclosure, Health Care Operations, Individual, Minimum Necessary, Notice of Privacy Practices, Protected Health Information, Required by Law, Secretary, Security Incident, Subcontractor, Unsecured Protected Health Information, and Use.

Specific definitions:

(a) Business Associate. "Business Associate" shall generally have the same meaning as the term "Business Associate" at 45 CFR 160.103., and in reference to the party to this Addendum, shall mean American Specialty Healthcare, Inc., doing business as Colusa Medical Center. Generally, a Business Associate provides services, arranges, performs or assists in the performance of functions or activities on behalf of the covered entity and creates, receives, maintains, transmits, uses or discloses PHI. County of Colusa (County) and Business Associate desire to protect the privacy and provide for the security of PHI created, received, maintained, transmitted, used or disclosed pursuant to this Addendum, in compliance with HIPAA and HIPAA regulations.

(b) Covered Entity. "Covered Entity" shall generally have the same meaning as the term "covered entity" at 45 CFR 160.103, and in reference to the party to this Addendum, shall mean County.

(c) Protected Health Information or PHI. "Protected Health Information" or "PHI" means any information, whether oral or recorded in any form or medium that relates to the past, present, or future physical or mental condition of an individual, the provision of health and dental care to an individual, or the past, present, or future payment for the provision of health and dental care to an individual; and that identifies the individual or with respect to which there is a reasonable basis to believe the information can be used to identify the individual. PHI shall have the meaning given to such term under HIPAA and HIPAA regulations, as the same may be amended from time to time.

(d) HIPAA Rules. "HIPAA Rules" shall mean the Privacy, Security, Breach Notification, and Enforcement Rules at 45 CFR Part 160 and Part 164.

(e) Data Aggregation. "Data Aggregation" shall have the meaning given to such term under the Privacy Rule, including but not limited to, 45 CFR Section 164.501.

(f) The terms used in this Exhibit, but not otherwise defined, shall have the same meanings as those terms are defined in the HIPAA regulations.

Obligations and Activities of Business Associate

Business Associate agrees to:

(a) Not use or disclose protected health information other than as permitted or required by the Addendum or as required by law;

(b) Use appropriate safeguards, and comply with Subpart C of 45 CFR Part 164 with respect to electronic protected health information, to prevent use or disclosure of protected health information other than as provided for by the Addendum. Business Associate shall develop and maintain a written information privacy and security program that includes administrative, technical and physical safeguards appropriate to the size and complexity of the Business Associate's operations and the nature and scope of its activities, and which incorporates the requirements of section (k), below. Business Associate will provide County with its current and updated policies;

(c) Report to covered entity any use or disclosure of protected health information not provided for by the Addendum of which it becomes aware, including breaches of unsecured protected health information as required at 45 CFR 164.410, and any security incident of which it becomes aware;

(d) In accordance with 45 CFR 164.502(e)(1)(ii) and 164.308(b)(2), if applicable, ensure that any subcontractors that create, receive, maintain, or transmit protected health information on behalf of the Business Associate agree to the same restrictions, conditions, and requirements that apply to the Business Associate with respect to such information;

(e) Within ten (10) days of receipt of a request from County make available protected health information in a designated record sent to the County as necessary to satisfy its obligations under 45 CFR 164.524;

(f) Within ten (10) days of receipt of a request from County make any amendment(s) to protected health information in a designated record set as directed or agreed to by County pursuant to 45 CFR 164.526, or take other measures as necessary to satisfy County's obligations under 45 CFR 164.526;

(g) Maintain and make available within ten (10) days of receipt of a request from County information required to provide an accounting of disclosures to the individual as necessary to satisfy County's obligations under 45 CFR 164.528;

(h) To the extent the Business Associate is to carry out one or more of County's obligations under Subpart E of 45 CFR Part 164, comply with the requirements of Subpart E that apply to County in the performance of such obligation(s);

(i) Request, use and disclose the minimum amount of PHI necessary to accomplish the purpose of the request, use or disclosure; 45 CFR 164.514(d)(3);

(j) Make its internal practices, books, and records available to the County and Secretary for purposes of determining compliance with the HIPAA Rules within ten (10) days of request by County;

(k) The Business Associate shall take any and all steps necessary to ensure the continuous security of all computerized data systems containing County PHI. These steps shall include, at a minimum: Providing a level and scope of security that is at least comparable to the level and scope of security established by the Office of Management and Budget in OMB Circular No. A-130, Appendix III- *Security of Federal Automated Information Systems*, which sets forth guidelines for automated information systems in Federal agencies. It is expected the Business Associate will implement and maintain the most stringent means and system to safeguard and provide the highest level of protection for County PHI from breaches and security incidents.

(l) Business Associate shall mitigate, to the extent practicable, any harmful effect that is known to Business Associate of a use or disclosure of PHI by Business Associate or its subcontractors in violation of the requirements of this Exhibit.

Permitted Uses and Disclosures by Business Associate

(a) Business Associate may only use or disclose protected health information as necessary to provision of the services set forth in the Service Agreement. (Agreement) Further, the Business Associate is authorized to use protected health information to de-identify the information in accordance with 45 CFR 164.514(a)-(c).

(b) Business Associate may use or disclose protected health information as required by law.

(c) Business Associate agrees to make uses and disclosures and requests for protected health information consistent with County's minimum necessary policies and procedures.

(d) Business Associate may not use or disclose protected health information in a manner that would violate Subpart E of 45 CFR Part 164 if done by covered entity, except for the specific uses and disclosures set forth below.

(e) Business Associate may disclose protected health information for the proper management and administration of Business Associate or to carry out the legal responsibilities of the Business Associate, provided the disclosures are required by law, or Business Associate obtains reasonable assurances from the person to whom the information is disclosed that the information will remain confidential and used or further disclosed only as required by law or for the purposes for which it was disclosed to the person, and the person notifies Business Associate of any instances of which it is aware in which the confidentiality of the information has been breached.

(f) Business Associate may provide data aggregation services relating to the health care operations of County.

Provisions for County to Inform Business Associate of Privacy Practices and Restrictions

(a) County shall notify Business Associate of any limitation(s) in the notice of privacy practices of covered entity under 45 CFR 164.520, to the extent that such limitation may affect Business Associate's use or disclosure of protected health information.

(b)County shall notify Business Associate of any changes in, or revocation of, the permission by an individual to use or disclose his or her protected health information, to the extent that such changes may affect Business Associate's use or disclosure of protected health information.

(c) County shall notify Business Associate of any restriction on the use or disclosure of protected health information that County has agreed to or is required to abide by under 45 CFR 164.522, to the extent that such restriction may affect Business Associate's use or disclosure of protected health information.

Permissible Requests by County

County shall not request Business Associate to use or disclose protected health information in any manner that would not be permissible under Subpart E of 45 CFR Part 164 if done by County, except if the Business Associate will use or disclose protected health information for, and the Agreement includes provisions for, data aggregation or management and administration and legal responsibilities of the Business Associate.

Term and Termination

(a) Term. The Term of this Addendum shall be effective as of the date of the Agreement, and shall terminate when the Agreement terminates or on the date County terminates for cause as authorized in paragraph (b) of this Section, whichever is sooner.

(b) Termination for Cause. Business Associate authorizes termination of this Addendum by County, if County determines Business Associate has violated a material term of the Addendum and Business Associate has not cured the breach or ended the violation within the time specified by County. County may in its discretion provide the Business Associate with an opportunity to cure a violation or breach of the contract before termination for cause.

(c) Obligations of Business Associate Upon Termination.

Upon termination of this Addendum for any reason, Business Associate, with respect to protected health information received from County, or created, maintained, or received by Business Associate on behalf of County, shall:

1. Retain only that protected health information which is necessary for Business Associate to continue its proper management and administration or to carry out its

legal responsibilities;

2. Return to County or, if agreed to by County, destroy the remaining protected health information that the Business Associate still maintains in any form;
3. Continue to use appropriate safeguards and comply with Subpart C of 45 CFR Part 164 with respect to electronic protected health information to prevent use or disclosure of the protected health information, other than as provided for in this Section, for as long as Business Associate retains the protected health information;
4. Not use or disclose the protected health information retained by Business Associate other than for the purposes for which such protected health information was retained and subject to the same conditions set out at paragraphs (e) above under "Permitted Uses and Disclosures By Business Associate" which applied prior to termination; and
5. Return to County or, if agreed to by County, destroy the protected health information retained by Business Associate when it is no longer needed by Business Associate for its proper management and administration or to carry out its legal responsibilities; or
6. At the request of County transmit the protected health information to another Business Associate of the County at termination, and/or could add terms regarding a Business Associate's obligations to obtain or ensure the destruction of protected health information created, received, or maintained by subcontractors.

(d) Survival. The obligations of Business Associate under this Section shall survive the termination of this Addendum.

Miscellaneous

(a) Regulatory References. A reference in this Addendum to a section in the HIPAA Rules means the section as in effect or as amended.

(b) Amendment. The Parties agree to take such action as is necessary to amend this Addendum from time to time as is necessary for compliance with the requirements of the HIPAA Rules and any other applicable law.

(c) Interpretation. Any ambiguity in this Addendum shall be interpreted to permit compliance with the HIPAA Rules. Except as specifically required to implement the purposes of this Addendum, or to the extent inconsistent with this Addendum, all other terms of the Agreement to which this Addendum is attached shall remain in effect.

(d) Ownership. County at all times owns the PHI shared pursuant to the terms of this Addendum.

Colusa County

Agenda Request Form

Item ID#: 2025-53 **Agenda Date:** 11/4/2025 **Item IV.1**

COUNTY ADMINISTRATIVE OFFICE

Approve FY25-26 Revenue and Appropriations Inter-Budget Adjustment No.'s IB-005 - IB-006. **(4/5th vote required)**

Detailed Description/Background of Request
Increase/Decrease Revenue and Appropriations to recognize additional revenues received; use fund balances to cover unanticipated expenditures and/or reallocate expenditures. Department Heads and/or their fiscal staff will be present to address any adjustments that the Board may have questions about.

Inter-Budget Ledger FY2025/26					
Department	**Fund**	**Object**	**Dept**	**Amount**	IB#
Library Special Project Trust	285	31960	000	1,500.00	IB-005
Library	001	48030	921	1,500.00	
Library Special Project Trust	285	59452	285	1,500.00	
Library	001	53250	921	1,500.00	
District Attorney	001	48030	516	52,839.00	IB-006
Consumer Protection	120	31960	000	52,839.00	
District Attorney	001	51010	516	21,959.00	
District Attorney	001	51021	516	17,835.00	
District Attorney	001	51022	516	1,664.00	

District Attorney	001	51043	516	11,381.00	
Consumer Protection	120	59452	120	52,839.00	

Fiscal Impact/Funding Source
See detailed report on the attached adjustment forms.

Action for the Clerk
None

Prior Board Action
None

Attachments:
1. IB-005 285 921 Inter-budget FY25-26 trust-library
2. IB-006 120 516 Inter-Budget FY25-26 for DAI-II

Reset Form

Colusa County Board of Supervisors **Agenda Request**

INTER-BUDGET ADJUSTMENT

REQUEST FOR APPROPRIATION OR TRANSFER OF FUNDS

Department Name: 921-Library

Submitted By: Deedra Taylor

Digitally signed by Deedra Taylor
DN: OU=921, O=Library, CN=Deedra Taylor, E=dtaylor@countyofcolusa.com
Reason: I am the author of this document
Location: your signing location here
Date: 2025-10-01 09:53:29
Foxit PhantomPDF Version: 9.7.5

Explanation: 285-Colusa Library Special Project Trust Recognize revenue from 47951-Misc. grants outside source from encumbered funds from 24/25 to cover program expenses for 921-Library 53250-Training and Travel, for employee travel to conference, partnership meetings and to cover other branches.

TO INCREASE (DECREASE) REVENUE

FUND NUMBER	OBJECT CODE	DEPT NUMBER	ACCOUNT NAME	CURRENT AMT. BUDGETED	REVISED AMT. BUDGETED	ADJUSTMENT AMOUNT
285	31960	000	Fund Balance-Unreserved	$ 0.00	$ 1,500.00	$ 1,500.00
						$ 0.00
001	48030	921	Transfers In	$ 48,647.00	$ 50,147.00	$ 1,500.00
						$ 0.00
						$ 0.00
						$ 0.00
						$ 0.00
						$ 0.00
						$ 0.00
						$ 0.00
						$ 0.00
						$ 0.00
					Total	$ 3,000.00

TO INCREASE (DECREASE) APPROPRIATIONS

FUND NUMBER	OBJECT CODE	DEPT NUMBER	ACCOUNT NAME	CURRENT AMT. BUDGETED	REVISED AMT. BUDGETED	ADJUSTMENT AMOUNT
285	59452	285	Transfers Out	$ 5,000.00	$ 6,500.00	$ 1,500.00
						$ 0.00
001	53250	921	Transportation & Travel	$ 0.00	$ 1,500.00	$ 1,500.00
						$ 0.00
						$ 0.00
						$ 0.00
						$ 0.00
						$ 0.00
						$ 0.00
						$ 0.00
						$ 0.00
					Total	$ 3,000.00

Fiscal Year: 2025/26

Board Date: 11/4/2025

Inter-Budget Log #: IB- 005

OpenGov Amendment #:

Reset Form

Colusa County Board of Supervisors **Agenda Request**

INTER-BUDGET ADJUSTMENT

REQUEST FOR APPROPRIATION OR TRANSFER OF FUNDS

Department Name: District Attorney

Submitted By: Devin Kelley

Digitally signed by Devin Kelley
Date: 2025.09.30 16:55:08 -07'00'

Explanation: To cover the difference in cost of hiring DAI-II instead of budgeted DAI-I.

TO INCREASE (DECREASE) REVENUE

FUND NUMBER	OBJECT CODE	DEPT NUMBER	ACCOUNT NAME	CURRENT AMT. BUDGETED	REVISED AMT. BUDGETED	ADJUSTMENT AMOUNT
001	48030	516	Transfer In	$ 23,315.00	$ 76,154.00	$ 52,839.00
						$ 0.00
						$ 0.00
120	31960	000	Fund Balance	$ 0.00	$ 52,839.00	$ 52,839.00
						$ 0.00
						$ 0.00
						$ 0.00
						$ 0.00
						$ 0.00
						$ 0.00
						$ 0.00
						$ 0.00
					Total	$ 105,678.00

TO INCREASE (DECREASE) APPROPRIATIONS

FUND NUMBER	OBJECT CODE	DEPT NUMBER	ACCOUNT NAME	CURRENT AMT. BUDGETED	REVISED AMT. BUDGETED	ADJUSTMENT AMOUNT
001	51010	516	Salaries	$ 1,070,222.00	1092181	$ 21,959.00
001	51021	516	Retirement	$ 453,044.00	470879	$ 17,835.00
001	51022	516	OASDI	$ 80,335.00	81999	$ 1,664.00
001	51043	516	Group Insurance	$ 179,253.00	190634	$ 11,381.00
						$ 0.00
						$ 0.00
120	59452	120	Transfer Out	$ 0.00	52839	$ 52,839.00
						$ 0.00
						$ 0.00
						$ 0.00
						$ 0.00
						$ 0.00
					Total	$ 105,678.00

Fiscal Year: 2025/26

Board Date: 11/4/2025

Inter-Budget Log #: IB- 006

OpenGov Amendment #:

Rural Energy Academy Peer Exchange

Applications are now open for the National Association of Counties (NACo)'s Rural Energy Academy first Peer Exchange in Gilliam, Sherman and Wasco Counties, Ore. This unique one-and-a-half-day event is an opportunity for county leaders to engage and network with peers at energy projects sites, hear from experts, share successes and brainstorm solutions to common renewable energy challenges facing rural communities.

NACo will select up to twenty-five (25) rural county leaders to be part of this expense-paid peer-learning event. The exchange is designed to support counties in adapting best practices and learned lessons in areas such as siting and permitting, energy demand and end-of-life of energy technology.

Important Dates and Deadlines
Open Call for Applications: Monday, September 15, 2025
Application Deadline: Monday, September 29, 2025
Announcement of Selected Counties: October 13, 2025
Peer Exchange: December 1-3, 2025
Peer Exchange Location: Gilliam, Sherman, Wasco Counties, Ore.

Learn more and apply here:

Colusa County

Agenda Request Form

Item ID#: 2025-83 **Agenda Date:** 11/4/2025 **Item V.2**

BOARD OF SUPERVISORS

Sitting as the Air Pollution Control District
Discuss and potentially approve the proposed MOU between Colusa County Air Pollution Control District and **Glenn County Air Pollution Control District** for the administration of the Off-Site Mitigation Program and authorize the Air Pollution Control Officer to sign.

Detailed Description/Background of Request
Over the past two years, the Air Pollution Control District has engaged in ongoing coordination with neighboring Air Districts and representatives of the Sites Reservoir Joint Powers Authority (JPA). The purpose of these meetings has been to collaboratively develop a Memorandum of Understanding (MOU) that establishes a framework for administering an Off-Site Mitigation Program, as required by the adjudicated and certified Environmental Impact Report (EIR).

The proposed MOU formalizes the cooperative approach among the participating Air Districts and the Sites JPA to ensure consistent implementation of the Off-Site Mitigation Program. The provisions outlined in the MOU are based directly on the emissions calculations and mitigation measures identified in the certified EIR, ensuring compliance with all environmental and regulatory requirements.

It is recommended that the Board approve the proposed MOU between the Colusa County Air Pollution Control District and Glenn County Air Pollution Control District for the administration of the Off-Site Mitigation Program and authorize the Air Pollution Control Officer to sign the MOU.

Fiscal Impact/Funding Source
Per the terms of this MOU, 7.25% of Mitigation funding would be paid to the Air District annual operating budget as fees for administering this program over the next 6-9 years.

Total off-site mitigation fees are currently estimated to be $63,700,000 with administration fees estimated to be $4,600,000.

The emissions modeling demonstrates 83% of the emissions occur in Colusa Air District. Therefore, 83% of mitigation fees will be paid to CCAPCD with the additional administration fee.

Mitigation Fees: $52,800,000
Admin Fee @ 7.25% = $3,820,750

Action for the Clerk
None

Prior Board Action
Obtain signatures as needed.

Return fully executed copy to debrown@countyofcolusaca.gov and ccair@countyofcolusaca.gov

Attachments:
1. Colusa-Glenn Interdistrict.MOU-Sites.10242025

MEMORANDUM OF UNDERSTANDING BETWEEN THE COLUSA COUNTY AIR POLLUTION CONTROL DISTRICT AND THE GLENN COUNTY AIR POLLUTION CONTROL DISTRICT RELATED TO THE CREATION, EXECUTION, AND MANAGEMENT OF AN OFF-SITE MITIGATION PROGRAM FOR THE SITES RESERVOIR PROJECT

This Memorandum of Understanding (MOU) is entered into by the Colusa County Air Pollution Control District and the Glenn County Air Pollution Control District (Districts) for the purposes of inter-district cooperation when working with the Sites Reservoir Project or the Sites Authority (Authority).

Recitals

A. WHEREAS, the Air Districts are air pollution control districts formed by their respective counties, which include Colusa and Glenn; and

B. WHEREAS, the Air Districts are responsible for developing and implementing air quality control measures within district boundaries as depicted in Exhibit 1 attached hereto and incorporated herein, including air quality control measures for stationary sources, transportation sources, and indirect sources; and

C. WHEREAS, the Sites Authority, is planning to construct and operate the Sites Project, a new off-stream water storage reservoir in the western Sacramento Valley near the community of Maxwell, California, associated facilities such as dams, dikes, smaller regulating reservoirs, and ancillary facilities such as recreation areas, new paved roads, and administration buildings; and

D. WHEREAS, the Sites Authority found in the Final EIR/EIS and Resolution 2023-02 that construction of the Sites Project, even with best management practices (BMP) and mitigation measures (MM) to reduce emissions, would exceed the applicable air quality thresholds and cause significant air quality impacts within certain Air District boundaries from emissions of nitrogen oxides (NOX) and particulate matter of 10 microns or less in diameter (PM10) as shown in Exhibits 5a, 5b, 5c, and 5d; and

E. WHEREAS, the Final EIR/EIS and Resolution 2023-02 committed the Sites Authority to entering into an MOU with the Air Districts via MM AQ-1.2 (Exhibit 4) to reduce impacts of NOX and PM10 emissions through offsite mitigation programs administrated by the Air Districts, and the Parties intend for this MOU to fully satisfy the Sites Authority's obligation to implement MM AQ-1.2; and

A. WHEREAS, emissions of certain criteria pollutants from construction of the Sites Authority's planned Sites Project within Air District boundaries could threaten their attainment/maintenance status of other criteria pollutants; and

F. WHEREAS, The Sites Project includes components/facilities that will be constructed and operated within the Air District boundaries; and

G. WHEREAS, to comply with the California Environmental Quality Act (CEQA) and its implementing Guidelines, the Sites Authority released a Final Environmental Impact Report/Environmental Impact Statement (Final EIR/EIS) for the Sites Project on November 2, 2023. The Sites Authority certified the Final EIR/EIS and adopted CEQA Findings, a Statement of Overriding Considerations, and the Mitigation Monitoring and Reporting Program, and adopted the Sites Project with Board Resolution 2023-02 at its November 17, 2023 meeting; and

H. WHEREAS, the Air Districts will develop offsite emission mitigation programs around several core principles, including cost-effectiveness, integrity, effective program administration, customer service, the efficient use of Air Districts' resources, fiscal transparency and public accountability; and

I. WHEREAS, the Air Districts' offsite mitigation programs will be regularly audited through industry standard practices approved for utilization by Local Special Districts; and

J. WHEREAS, the Air Districts have determined that with funding from the Sites Authority under an executed MOU between the Authority and the Air Districts, the Air Districts can source and secure offsite programs to mitigate the NOX and PM10 emissions that are expected to result from construction of the Sites Project to comply with CEQA Requirements.

AGREEMENT

The Air Districts agree to the following:

1. IDENTIFICATION OF PARTICIPATING DISTRICTS AND ROLES

a. Participation by an Air District in the Sites Off-Site Mitigation Program not mandatory.

b. Colusa County Air Pollution Control District and Glenn County Air Pollution Control District are the only air districts which fall within the construction footprint of the body of the Site Reservoir and the only two air districts elligible to participate in this Off-Site Mitigation Program.

c. Participating Air Districts will receive a proportion of the mitigation fees corresponding to the projected emissions attributed to its jurisdiction, as determined in the certified

Environmental Impact Report (EIR) and detailed in Exhibits 5a, 5b and 5c of the Sites - Air Districts MOU and summarized as follows:

i. Summary Table

	Emissions Over Thresholds	Emissions Over Thresholds	Emissions Mitigation Fee	Emissions Mitigation Fee		
	PM 10	**NOx**	**PM 10**	**NOx**	**TOTAL**	**%**
Colusa	1242	312	$ 42,200,000.00	$ 10,600,000.00	$ 52,800,000.00	83.02%
Glenn	271	48	$ 9,200,000.00	$ 1,600,000.00	$ 10,800,000.00	16.98%
Total	1513	360	$ 51,400,000.00	$ 12,200,000.00	$ 63,600,000.00	100.00%

Participating Air Districts will receive an Administrative Fee of 7.25% of the total Mitigation Fees from the Sites Authority. These fees will be distributed at the same proportions as the Emissions Mitigation Fees described above.

2. RESPONSIBILITY OF DISTRICT PARTICIPANTS

a. Each participating Air District is responsible for the following:

i. Recordkeeping

1. Financial records kept by the District's fiscal staff, and/or fiscal department detailing any funds received or distributed using standard accounting practices.

2. Staff costs including time spent, direct and indirect costs, salaries and benefits, and any other costs associated with administering the program.

3. Project costs including what the funding was used for, who received funding, and amounts disbursed.

ii. Project solicitation, selection, and documentation of compliance with contractual obligations.

iii. Development of contracts between District and project applicants

iv. Coordinate and collaborate with participating districts to produce annual reports as required by Sites-District MOU.

v. Attend quarterly Sites Off-Site Mitigation Program meetings

vi. Auditing emissions reports submitted by Authority or their designee.

vii. Report and provide inspection reports to participating districts of onsite visits or inspections.

DISTRIBUTION OF MITIGATION FEES

b. Sites will distribute all Off-Site Mitigation Program Funds to Colusa County Air Pollution Control District (CCAPCD). CCAPCD will transfer the appropriate funds to Glenn County Air Pollution Control District within 30 days of receipt.

c. Mitigation Fees will be distributed based upon a percentage of total emissions estimated to exceed established thresholds as determined by the Sites Reservoir Project Final EIR/EIS document and reference by Exhibits 5a-5c in the Sites Project Air Districts MOU.

d. Movement of Funds Between Participating Districts

i. Any transfers of distributed funds between Districts must be approved in writing by both Air Pollution Control Officers, be documented using standard fiscal policies and in accordance to the guidelines approved by both District Auditors.

e. Liquidation Timeline

i. Districts shall make best efforts to expend the mitigation funds within two (2) years of receipt, with the overall goal of having all mitigation funds fully expended no later than two (2) years following the receipt of the final distribution payment.

ii. Funding provided by the Sites Off-Site Mitigation Program shall implement emissions reduction projects in geographies closest to where the emissions are produced in the construction of the body of the Sites Reservoir. When acceptable projects are not available, Districts may seek out projects in larger geographies. However, under no condition shall emission reduction projects be funded in locations outside of the Sacramento Valley Air Basin.

3. MOU DURATION

a. Effective Date: This MOU shall commence on the date the last party executes this MOU and shall continue thereafter, subject to potential amendments pursuant to section 7.

b. Termination: This MOU will remain in effect for the duration of the Sites-District MOU (Exhibit 6) including any extensions as required. Should the Sites-District MOU be terminated for any reason, this MOU will terminate on such date.

c. **Withdraw From Participation:** Should any participating District choose to withdraw from this MOU, it may do so at any time by the following procedures:

   i. Provide written notice to all participants of this agreement with their intent to withdraw their participation.

   ii. Provide to all participants of this agreement with the current financial and contractual documents and reports.

   iii. Transfer all remaining mitigation funds to the remaining Air District.

4. AMENDMENTS

   a. The Parties agree to work cooperatively over the MOU's duration to evaluate any amendments necessary to this MOU. Amendments may be necessary to reflect any relevant circumstances that may change, including but not limited to changing state and federal law requirements related to air quality, changing and evolving Sites Project funding, or changing state and/or federal law requirements.

   b. Amendments to this MOU must be made by written agreement by all participating Parties.

5. FURTHER DOCUMENTATION

   The Parties agree to execute any further documents reasonably necessary to effectuate the terms of this MOU, as long as the terms and provisions of the other documents are fully consistent with the terms of this MOU.

6. DISPUTE RESOLUTION

   a. **Informal Dispute Resolution**

      i. In the event of dispute regarding interpretation or implementation of this MOU, the respective Air Pollution Control Officers, or their authorized representatives, shall endeavor to resolve the dispute by meeting within 30 days after the request of a Party. If the dispute remains unresolved, the Parties will endeavor to resolve the dispute through mediation, as specified in Paragraph 9.b.

      ii. No other means of dispute resolution, including mediation or litigation, shall be available to the Parties unless they have exhausted the process provided for in this Paragraph 9.a.

   b. **Mediation**

i. If a dispute cannot be resolved through informal dispute resolution as described in Paragraph 9.a, the Parties shall endeavor to settle the dispute using non-binding mediation under the rules of the Judicial Arbitration and Mediation Service (JAMS), the American Arbitration Association (AAA), or any other neutral organization agreed upon by the Parties before having recourse in a court of law. Mediation shall be commenced by sending a notice of demand for mediation to the other Parties.

ii. A single mediator that is acceptable to the Parties shall be used to mediate the dispute. The mediator will be knowledgeable in the subject matter of this MOU, if possible.

iii. The expenses of witnesses for either side shall be paid by the Party producing such witnesses. All mediation costs, including required travel and other expenses of the mediator, and the cost of any proofs or expert advice produced at the direct request of the mediator, shall be equally shared by the Parties to the dispute.

iv. Notwithstanding any JAMS or AAA rules to the contrary, mediation will be conducted in an informal manner. Discovery shall not be allowed. The discussions, statements, writings and admissions and any offers to compromise during the proceedings will be confidential to the proceedings (Evidence Code §§ 1115 – 1128; 1152) and will not be used for any other purpose unless otherwise agreed by the Parties in writing.

v. Any resultant agreements from mediation shall be documented in writing. The results of the mediation shall not be final or binding unless otherwise agreed to in writing by the Parties.

c. If the Parties fail to resolve their dispute through mediation, including execution of a final written agreement, either Party may, at its option, pursue any available legal remedy including, but not limited to, injunctive and other equitable relief.

d. Nothing in this Paragraph 7 shall relieve the Parties from performing their obligations under this MOU. The Parties shall be required to comply with this MOU, including the performance of all disputed activity and disputed payments, pending the resolution of any dispute under this MOU.

7. SECTION HEADINGS

The section headings of this MOU are for the convenience of the Parties and shall not be considered to limit, expand, or define the contents of the respective sections.

8. OPINION AND DETERMINATION

Where the terms of this MOU provide for actions to be based upon the opinion, judgment, approval, review, or determination of any Party, such terms will be reasonably construed.

9. ENTIRE AGREEMENT

This MOU and amendments made to it contain the entire understanding of the Parties relating to this subject matter and shall supersede any prior written or oral agreements or communications between the Parties pertaining to that subject matter.

10. MODIFICATION OF AGREEMENT

No amendment to the terms and conditions of this MOU shall be valid unless made in writing and signed by all the Parties to this MOU.

11. SIGNATURES

The signatories represent that they have been appropriately authorized to execute this MOU on behalf of the Party for whom they sign.

12. EXECUTION

The Parties agree that this MOU can be executed in counter parts and by electronic signature, which shall be considered an original signature for all purposes and shall have the same force and effect as an original signature.

IN WITNESS WHEREOF, the parties hereto have entered in this MOU.

Colusa County Air Pollution Control District

_____
M. Anastacia Allen
Air Pollution Control Officer

_____
Date

Glenn County Air Pollution Control District

_____
Marcie Skelton
Air Pollution Control Officer

_____
Date

Colusa County

Agenda Request Form

Item ID#: 2025-88 **Agenda Date:** 11/4/2025 **Item VIII.1**

HUMAN RESOURCES

CONFERENCE WITH LABOR NEGOTIATOR, California Government Code 54957.6
Agency Negotiator: Dar Rhodes, Kaline Moore and Yareli Mora
Employee Organizations: Colusa County Management Coalition and Colusa County Deputy Sheriff Association

Detailed Description/Background of Request

Fiscal Impact/Funding Source

Action for the Clerk

Prior Board Action
None.

Attachments:
None

Colusa County

Agenda Request Form

Item ID#: 2025-68 **Agenda Date:** 11/4/2025 **Item VIII.2**

HUMAN RESOURCES

CLOSED SESSION: PUBLIC EMPLOYMENT DISCIPLINE/DISMISSAL/RELEASE
California Government Code 54957(b).

Detailed Description/Background of Request

Fiscal Impact/Funding Source

Action for the Clerk

Prior Board Action

Attachments:
None

Colusa County

Agenda Request Form

Item ID#: 2025-80 **Agenda Date:** 11/4/2025 **Item VIII.3**

COUNTY ADMINISTRATIVE OFFICE

CONFERENCE WITH REAL PROPERTY NEGOTIATORS (California Govt Code 54956.8)
Property: 90 King Air Drive, Colusa, Ca and 284 Piper Lane, Colusa, Ca.
Property owner: Colusa Estates, LLC.
Proposed Purchaser: Colusa County
Negotiators: Assistant CAO and County Counsel
Under negotiation: Price and Terms of Sale

Detailed Description/Background of Request
None.

Fiscal Impact/Funding Source
None.

Action for the Clerk
None.

Prior Board Action
None.

Attachments:
None

Colusa County

Agenda Request Form

Item ID#: 2025-76 **Agenda Date:** 11/4/2025 **Item VIII.4**

ADMIN

EMPLOYEE PERFORMANCE EVALUATION
California Government Code section 54957(b). Title: Interim County Administrative Officer.

Detailed Description/Background of Request

Fiscal Impact/Funding Source

Action for the Clerk

Prior Board Action

Attachments:
None

Colusa County

Agenda Request Form

Item ID#: 2025-74 **Agenda Date:** 11/4/2025 **Item 1**

COMMUNITY DEVELOPMENT DEPARTMENT

Public Hearing and Adoption of a Resolution approving the Maxwell Community Plan and finding the project is exempt from the California Environmental Quality Act (CEQA).

Detailed Description/Background of Request
In March 2024, the Board of Supervisors approved a Memorandum of Understanding with the Sites Reservoir Authority Board detailing the County's and the Authority's obligations to prepare a Sites Reservoir Area Plan and a Maxwell Community Plan per the requirements of the County's General Plan. In April 2024, the Board approved a contract with DeNovo Planning Group to prepare these plans with funding from the Authority. In May 2024 and December 2024, the Board received presentations on the development of the community plans.

To date, plan development efforts have focused on the Maxwell Community Plan. Efforts on developing the Sites Reservoir Area Plan will begin following refinement of the resultant configuration of the private properties surrounding the reservoir and confirmation of access limitations to the reservoir from these properties. The outreach for the Maxwell Community Plan development included four in-person workshops and community polling exercises to provide community members, public agencies, and stakeholders an opportunity to discuss their concerns and potential opportunities for the Maxwell area in light of the pending Sites Reservoir Project.

The first Community Workshop was meant to receive comments and feedback regarding the Sites project in order to identify areas of concern or opportunities for improvements throughout the Maxwell area. The second Community Workshop included a vision board activity and a post-it note activity to streamline the feedback process and receive input from the public regarding specific short-term and long-term opportunities and challenges that the Maxwell community may face as a result of the Sites Reservoir Project.

As a result of the information gathered at those meetings, an Administrative Draft of the Maxwell Community Plan (Plan) was developed. The administrative draft Plan was presented to the Board of Supervisors on December 17, 2024, for their initial review and input. The Board's input was incorporated into a final draft Plan, which was distributed to the community for review in February 2025. A third Community Workshop was held to present the final draft Plan to obtain input directly from the Maxwell community, affected agencies, and stakeholders.

On June 4, 2025, the Planning Commission received a presentation on the Maxwell Community Plan and provided the following input:

- Enlarge the Vicinity Map and identify the roadways
- Clean up any typos or reference errors
- Host a Community Meeting with the parties responsible for Plan implementation to clarify who is doing what, when it will get done, and how it will be paid for.

On June 17, 2025, the Board of Supervisors received a presentation on the Maxwell Community Plan and provided the following input:

- Identified Plan implementation strategies that require Zoning Code amendment(s) should be prioritized following Plan adoption
- Plan implementation efforts should be coordinated so infrastructure improvements can occur at the same time (i.e., drainage and roadway improvements should be coordinated)
- Facilitate Plan implementation discussions between impacted agencies and entities to ensure coordination
- Continue to engage in community outreach

On September 18, 2025, a fourth Community Workshop was held to discuss the changes made to the Plan and the implementation strategies in response to the feedback received during the June 2025 Planning Commission and Board of Supervisors discussions.

On October 1, 2025, the Planning Commission held a public hearing and adopted Resolution #25-06 (see attachments) recommending that the Board of Supervisors approve the Maxwell Community Plan and find the project is exempt from the California Environmental Quality Act.

APN/LOCATION:

Various properties (numerous APNs) that are located within the Maxwell and Sites areas.

ENVIRONMENTAL REVIEW:

The proposed Maxwell Community Plan is intended to respond to the challenges and opportunities presented by the future development of the Sites Reservoir Project by providing guidance, strategies, and implementation actions to help guide and shape the future of the Maxwell Community in accordance with the Colusa County General Plan specific to the Sites and Maxwell areas. CEQA applies only to projects that have the potential for causing a significant impact on the environment. Given that the proposed Maxwell Community Plan is a simple guidance document to respond to the

future development of the Sites Reservoir Project, it can be seen with certainty that there is no possibility that the project will have a significant impact on the environment; therefore, the project is not subject to CEQA.

MAXWELL COMMUNITY PLAN OVERVIEW:

The Maxwell Community Plan consists of the following six sections:

1. Introduction & Purpose: Provides an overview of the Maxwell Community Plan's goals and sets the framework for future development. This section includes an executive summary, identifies a vision statement, and provides overall objectives of the plan to address a wide range of issues including housing, infrastructure, parks and schools, public safety, economic development, and funding.

2. Sites Reservoir Overview: Details the role and impact of the Sites Reservoir on Maxwell, including potential expected benefits for local and regional growth. In addition, this section provides an overview of the Sites Reservoir project, its history, planned features, construction, and expected short- and long-term employment.

3. Existing Conditions in Maxwell: Reviews Maxwell's current economic and environmental conditions to establish a foundation for the proposed planning initiatives. This section provides information on the regional and local context; utilities and infrastructure; land use and zoning; development capacity; existing site inventory; and a potential gateway park.

4. Community Outreach Efforts: Summarizes the engagement efforts with local residents, agencies, and other stakeholders to ensure the plan reflects community needs and priorities. Information is provided on community engagement and discussions, and information gathering exercises.

5. Key Issues: Identifies the primary challenges and directives Maxwell will be addressing through the community plan. This section provides an overview of pressing issues, such as balancing growth with agricultural land preservation, managing water resources, enhancing transportation networks, and ensuring access to services and amenities.

6. Goals, Strategies & Implementation: Outlines actionable steps to achieve the plan's vision. This section identifies specific actionable items addressing a range of issues, including: housing, infrastructure, community facilities, community safety, economic development, and downtown Maxwell.

RACI MATRIX:

In response to the feedback received during the June 2025 Planning Commission and Board of Supervisors discussions, staff prepared a Maxwell Community Plan RACI Matrix for each identified implementation strategy. The RACI Matrix identifies which parties are Responsible (R), Accountable (A), Consulted (C), and Informed (I).

- **Responsible (R)** - The agency or entity that performs the work required to complete a task, or has a role in implementation.
- **Accountable (A)** - The agency or entity that is ultimately answerable for the successful completion of a task. It may also be the Responsible agency or entity.
- **Consulted (C)** - The agency or entity whose input is needed or desired before a decision or action is taken.
- **Informed (I)** - The agency or entity that should be kept up-to-date on the progress or outcome of a task.

The Maxwell Community Plan RACI Matrix is provided as Attachment "1", and is intended to be a living document that will be updated as the implementation of the Maxwell Community Plan evolves. It is a tool that will be referred to regularly throughout Plan implementation to clarify roles, reduce confusion regarding any role conflicts, gaps, or overlaps, and ensure clarity and consensus to achieve the successful implementation of the community's vision.

Fiscal Impact/Funding Source
The consultant costs will be paid pursuant to the provisions of the MOU with the Sites Reservoir Authority Board.

Action for the Clerk
If any, determined by the Board action.

Prior Board Action
On March 26, 2024, the Board of Supervisors approved an MOU with the Site's Reservoir Authority Board regarding the preparation of Sites Area and Maxwell Community plans and their funding.

On April 23, 2024, the Board of Supervisors approved a contract with DeNovo Planning Group for the preparation of Sites Area and Maxwell Community plans and their funding.

On May 21, 2024, the Board of Supervisors received a presentation on the initiation of the development of the Sites Area and Maxwell Community Plans.

On December 17, 2024, the Board of Supervisors received a presentation on the Administrative Draft of the Maxwell Community Plan and provided input.

On June 17, 2025, the Board of Supervisors received a presentation on the Final Draft of the Maxwell Community Plan and provided input.

Attachments:
1. 2025 11 04 Resolution Approving Maxwell Community Plan
2. Exhibit A - Maxwell Community Plan_Final DFT Sept.2025
3. Attachment 1_RACI Matrix_Maxwell Com Plan_DFT_9.18.2025

4. Attachment 2_PC Resolution Recommending Approval_10.1.2025
5. Proof of Publication

RESOLUTION NO. 25-____

RESOLUTION OF THE COLUSA COUNTY BOARD OF SUPERVISORS APPROVING A CEQA STATUTORY EXEMPTION AND THE MAXWELL COMMUNITY PLAN

WHEREAS, on March 26, 2024, the Colusa County Board of Supervisors approved Contract No. C24-034 a Memorandum of Understanding with the Sites Project Authority for the creation and implementation of the Sites Reservoir Area Plan and the Maxwell Community Plan per the requirements of the County's General Plan;

WHEREAS, on April 23, 2024, the Colusa County Board of Supervisors approved Contract C24-050 with DeNovo Planning Group to prepare the Sites Reservoir Area Plan and the Maxell Community Plan with funding from the Authority;

WHEREAS, community engagement workshops were held on June 20, 2024, and July 24, 2024, to gather community feedback and input on community priorities to be addressed in the Maxwell Community Plan;

WHEREAS, the administrative draft Maxwell Community Plan was presented to the Colusa County Board of Supervisors on December 17, 2024, for the initial review and input;

WHEREAS, a third community engagement workshop was held on February 13, 2025, to gather community feedback and input on the Administrative Draft Maxwell Community Plan for incorporation into the Final Draft Maxwell Community Plan;

WHEREAS, the final draft Maxwell Community Plan was presented to the Colusa County Planning Commission on June 4, 2025, and the Board of Supervisors on June 17, 2025, for their review and input;

WHEREAS, a fourth community engagement workshop was held on September 18, 2025, to gather community feedback and input on the revisions to the final draft Maxwell Community Plan in response to feedback received during the June 2025 review by the Colusa County Planning Commission and Board of Supervisors, and the Maxwell Community Plan RACI Matrix for plan identified implementation strategies;

WHEREAS, Colusa County is the Lead Agency under the California Environmental Quality Act (CEQA) for the project and has determined that a Statutory Exemption is appropriate for the proposed project;

WHEREAS, in accordance with the California Government Code, on October 1, 2025, the Colusa County Planning Commission conducted a public hearing on the proposed Maxwell Community Plan detailed in Exhibit "A" attached to this resolution;

WHEREAS, on October 1, 2025, the Colusa County Planning Commission, based on facts contained within the Planning Staff's report on the Project (including, without limitation, the final draft Maxwell Community Plan and proposed environmental determination), all public testimony, all other written and oral testimony, and totality of the public record of the Project, passed and adopted Resolution No. 25-006 recommending the Colusa County Board of Supervisors that the Board approve a

Statutory Exemption pursuant to Title 14, Division 6, Chapter 3, Article 5, Section 15061(b)(3) of the California Code of Regulations because there is no possibility this project may have a significant effect on the environment, and approve the Maxwell Community Plan;

WHEREAS, in accordance with California Government Code, on October 21, 2025, the Colusa County Board of Supervisors conducted a public hearing on the proposed Maxwell Community Plan detailed in Exhibit "A" attached to this resolution; and

NOW, THEREFORE, BE IT RESOLVED by the Colusa County Board of Supervisors, based on the facts contained in the Planning Staff's report on the Project (including, without limitation, the final draft Maxwell Community Plan and proposed environmental determination), all public testimony, all other written and oral testimony, and totality of the public record of the Project, the Board of Supervisors make the following findings:

1. The Maxwell Community Plan detailed in Exhibit "A" attached hereto and incorporated by reference is consistent with the General Plan, the County Code, and all other applicable plans or regulations; the Maxwell Community Plan is in conformance with the public convenience and general welfare of persons residing in the immediate area and will not be detrimental or injurious to property or persons in the general neighborhood or the general welfare of the residents of the County as a whole; and the Maxwell Community Plan will promote the orderly development of property or the preservation of property values in the Maxwell area.

2. That the proposed project is exempt from the California Environmental Quality Act (CEQA) pursuant to Title 14, Division 6, Chapter 3, Article 5, Section 15061(b)(3) of the California Code of Regulations because there is no possibility that this project may have a significant effect on the environment.

NOW, THEREFORE, BE IT FURTHER RESOLVED that based upon the findings of this resolution, the Colusa County Board of Supervisors approves a Statutory Exemption pursuant to Title 14, Division 6, Chapter 3, Article 5, Section 15061(b)(3) of the California Code of Regulations because there is no possibility this project may have a significant effect on the environment, and the Maxwell Community Plan, attached hereto as Exhibit "A" and incorporated herein by reference, subject to any minor amendments by County Counsel, is hereby adopted and approved.

PASSED AND ADOPTED, this 4th day of November 2025, by the following vote:

AYES:

NOES:

ABSENT:

_____
Daurice K. Smith, Chair,
Colusa County Board of Supervisors

ATTEST: Marcos Kropf, Interim
Clerk of the Board of Supervisors

By: _____
Patricia Rodriguez, Deputy Board Clerk

APPROVED AS TO FORM:

_____
Richard Stout, County Counsel



MAXWELL COMMUNITY PLAN

A Vision for the Maxwell Sites Reservoir Area

Prepared for:

Colusa County
Community Development Department
1213 Market Street
Colusa, CA 95932
530.458.0480

COLUSA COUNTY
— CALIFORNIA —

Prepared by:

De Novo Planning Group
Ben Ritchie | Principal
1020 Suncast Lane #106
El Dorado Hills, CA 95762
916.949.3231

September 2025

Table of CONTENTS

04 | Introduction & Purpose

Provides an overview of the Maxwell Community Plan's goals, setting the framework for responsible development.

06 | Sites Reservoir Overview

Details the role and impact of the Sites Reservoir on Maxwell, including potential expected benefits for local and regional growth.

11 | Existing Conditions in Maxwell

Reviews Maxwell's current economic, and environmental conditions to establish a foundation for proposed planning initiatives.

19 | Community Outreach Efforts

Summarizes the engagement efforts with local residents, stakeholders, agencies and other stakeholders to ensure the plan reflects community needs and priorities.

23 | Key Issues

Identifies the primary challenges and directives Maxwell will be addressing through the community plan.

25 | Goals, Strategies & Implementation

Outlines actionable steps to achieve the plan's vision.





VISION STATEMENT

The community of Maxwell is steeped in history and grounded in its agricultural roots. Located along the I-5 corridor, in the heart of Colusa County, Maxwell is a family-oriented community comprised of a mosaic of families and individuals. As Maxwell looks to the future, it continues to value and promote safety, economic opportunities, civic pride, and rural independence. Maxwell seeks to preserve and build upon its historic roots, while capitalizing on opportunities to further improve and enhance the quality of life of all its residents and visitors.



INTRODUCTION & PURPOSE

1.0: Executive Summary

The Maxwell Community Plan has been developed in order to help guide and shape future conditions in Maxwell, and is spurred in part by the pending construction and operation of the Sites Reservoir Project.

This community plan has been prepared to reflect the guidance and direction for the Maxwell community articulated in the Colusa County General Plan, and responds to the vision and local priorities expressed by Maxwell residents and local agencies.

The chapter is organized into the following sections:

1.1 Vision Statement

1.2 Objectives

1.1: VISION STATEMENT

This vision statement is an aspirational description of how the Maxwell community should look and feel when the Maxwell Community Plan is implemented incrementally in subsequent years.

- Ensure that Maxwell has effectively capitalized and responded to the opportunities and challenges afforded and posed by the construction and operation of Sites Reservoir.
- Support Downtown Maxwell as the historic heart of the community where the past is celebrated, and the future is embraced.
- Maxwell remains grounded in its agricultural roots, while providing expanded economic development opportunities related to tourism, services, alternative energy, and construction/ manufacturing.

- The community has a recognizable identity which signals to people that they are in a special place, rooted in history and full of opportunity.
- Work to expand a range of housing options for households of all sizes, makeups, and economic statuses.
- Strive to preserve and rejuvenate Downtown Maxwell's historic character through design guidelines and redevelopment efforts that promote economic activity, and provide a central community gather space comprised of residences, business, and community open spaces
- Prepare Maxwell to serve as the physical and economic gateway to Sites Reservoir and other recreational activities throughout western Colusa County.
- Ensure that Maxwell is served by excellent utilities and community services, resulting in a safe community with reliable water and sewer infrastructure.
- Continuously work to ensure that roadways and sidewalks throughout the community are safe, connected, and well maintained, allowing for a range of mobility options throughout the community.
- Strive to ensure that local schools are well-supported, and provide safe and attractive spaces for students to learn and grow.
- Seek additional opportunities to improve parks and recreational open spaces throughout the community.

1.2: OBJECTIVES

In order to achieve the Vision Statement identified in this Maxwell Community Plan, the County of Colusa, local agencies, residents, and stakeholders from the Maxwell community have identified the following objectives:

Flexible Housing Solutions

*Provide flexibility and support to allow for creative **short-term housing solutions** to accommodate an influx of workers during the construction of Sites Reservoir.*

Meeting Housing Needs

*Meet the needs of existing and future residents by encouraging and facilitating the construction of **additional housing units** in Maxwell, and work to improve the condition of existing housing units in Maxwell.*

Infrastructure Expansion

*Expand the **capacity and reliability of the water and wastewater infrastructure** provided by the Maxwell Public Utilities District in order to better serve existing customers, and meet the demand of future customers.*

Community Parks and School Support

*Provide additional **community parks and open space resources**, and **support the Maxwell Unified School District** in their efforts to provide safe and attractive school campuses.*

Public Safety Enhancement

*Ensure a **safe community** through well-equipped and properly funded law enforcement and fire/EMS services.*

Transportation Network

*Maintain a **safe and well-functioning transportation network** that meets the needs of all users.*

Economic Revitalization

***Improve local economic conditions** by promoting revitalization of existing businesses in Maxwell, and capitalizing on opportunities related to the construction and operation of Sites Reservoir.*

Downtown Improvement

*Improve the physical and aesthetic characteristics of **Downtown Maxwell** through the implementation of design guides, building and façade rehabilitation, and the expansion of economic opportunities.*

Funding Acquisition

*Aggressively seek **outside funding sources**, such as State and Federal grants, to assist with the implementation of the Maxwell Community Plan.*





SITES RESERVOIR OVERVIEW

2.0: Summary

The Sites Reservoir, a proposed off-stream water storage project located west of Maxwell, offers critical water storage potential for California's water supply challenges, aiming to capture excess runoff in wet years to provide reliable water resources during dry periods. This project promises economic, environmental, and community benefits, including improved water security, job creation, and increased recreational opportunities. This overview introduces the reservoir's anticipated role within the community, aligning with long-term sustainability goals for the Central Valley and beyond.

The chapter is organized into the following sections:

2.1 Sites Reservoir Context

2.2 Sites Reservoir Description

2.1: Sites Reservoir Context

2.1.1: PROJECT HISTORY

The concept for a surface water storage facility at Sites originates in the 1950s where the location was proposed as a reservoir location to meet growing water demands throughout the State. Sites was not officially considered by developers until 1995 when the CALFED Bay-Delta Program (CALFED) initiated the evaluation of expanded surface water storage in the Sacramento and San Joaquin Valleys as a part of a long-term plan to restore the ecological health of the Sacramento-San Joaquin Delta and its watershed. CALFED initially identified and analyzed over 50 potential surface water storage locations across the state during the development of its environmental impact report and environmental impact statement. This screening of potential locations indicated a preference for offstream surface water storage to avoid redirected impacts on aquatic species in the primary tributaries in the Delta.

By 2000, the California Department of Water Resources (DWR) continued to evaluate potential surface water storage locations on the western side of the Sacramento Valley as a part of the Surface Water Storage Investigation. The objectives of this investigation were to formulate a project that would enhance water management flexibility in the Sacramento Valley, increase the reliability of surface water supplies statewide, and improve water quality and ecosystems. DWR's efforts narrowed the potential storage locations to four potential options: Red Bank (Dippingvat and Schoenfield Reservoirs), Newville Reservoir, Colusa Reservoir, and Sites Reservoir. Additional screening led to the selection of the Sites Reservoir as the most conducive location to furthering project goals while minimizing environmental impacts. The Surface Water Storage Investigation also evaluated water source options that led to the selection of the existing Tehama-Colusa Canal (TC Canal), GCID diversion, and the addition of a new pipeline from the Sacramento River.

In 2017 the Sites Project Authority (Authority) submitted a Water Storage Investment Program (WSIP) application to the California Water Commission (CWC) to determine the eligibility for funding under Proposition 1 which was passed by the California voters in 2014. The CWC's evaluation made nine determinations regarding the Authority's application including the determinations that the Sites Reservoir would provide a net ecosystem improvement, would provide measurable improvements to the Delta ecosystem, and would advance the long-term objectives of restoring the ecological health of the Delta and improving water management to protect beneficial uses in the Delta and its watershed. By 2018, the project was awarded $820 million from a State bond through Proposition 1. In 2021 the CWC voted in favor of exploring the project's feasibility. By 2023 Governor Gavin Newsom signed State Bill 149 (SB 149) which provided certain streamlining benefits from legal challenges filed under the California Environmental Quality Act (CEQA). Construction of the Sites Reservoir project was approved and is projected to begin development in 2025/2026 with potential completion by 2031/2032.

2.2: Sites Reservoir Description

2.2.1: RESERVOIR FEATURES

The Sites Reservoir Project would construct a 1.5-million-acre-foot offstream reservoir to capture excess stormwater and store the water until it is needed during dry periods or prolonged droughts. When utilized, the water would be used for environmental quality needs, as a water source for communities, and for agricultural purposes. The existing surface water storage system throughout California were designed to capture snowmelt, but precipitation in California occurs more commonly in the form of rain. Current trends, factoring in environmental changes project reliance on precipitation as a water storage contributor will increase as the existing water storage facilities are unable to support projected increases in water need to serve communities, fuel the economy, and revitalize the environment. Once completed and operational, Sites Reservoir will also be integrated with the State Water Project and Central Valley Project, improving management of California's water supply during extremes such as flooding and drought.

The 1.5-million-acre-foot reservoir would be located to the west of Maxwell, CA stretching 13 miles from north to south, and 4 miles from east to west, as seen in **Figure 1** When filled, it would be approximately 260 feet deep at its lowest point. Grapevine and Antelope Creeks would flow into the Reservoir from the west and south, while Stone Corral Creek would flow eastward from the Reservoir into the Central Valley, and Funks Creek would flow eastward from the Reservoir into Funks Reservoir. The Sites Dam, Golden Gate Dam, and nine smaller dams would be constructed to hold water in the Reservoir at the lowest points of the surrounding hills.

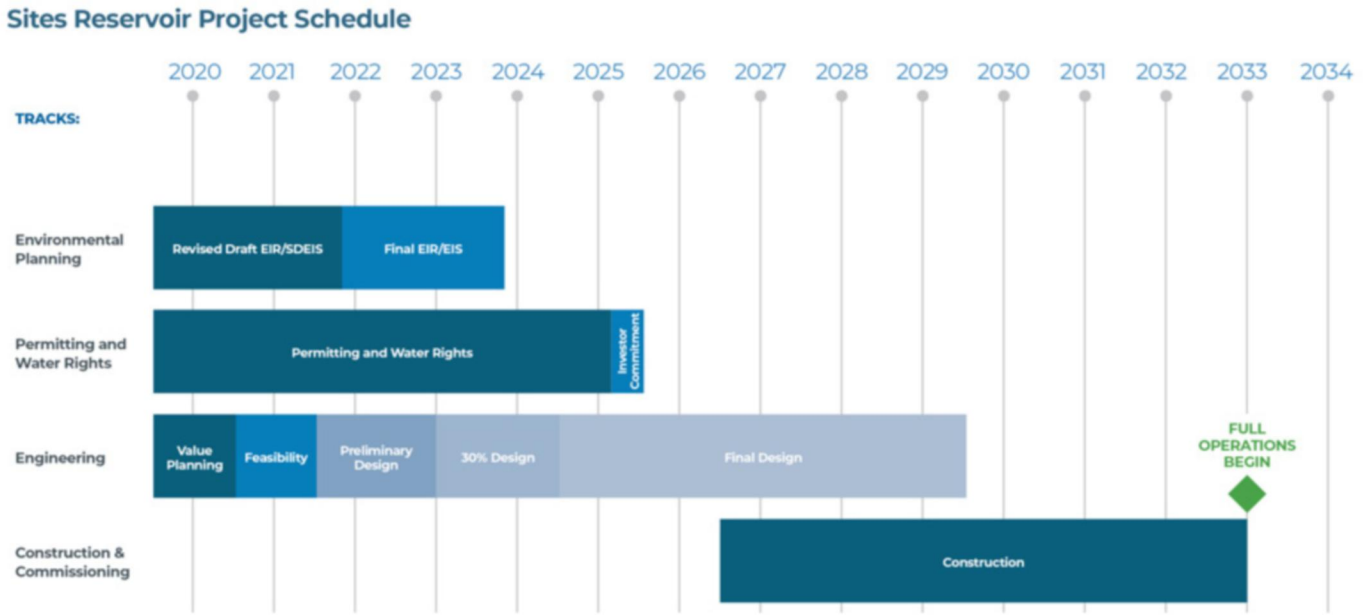

Figure 1. Vicinity Map

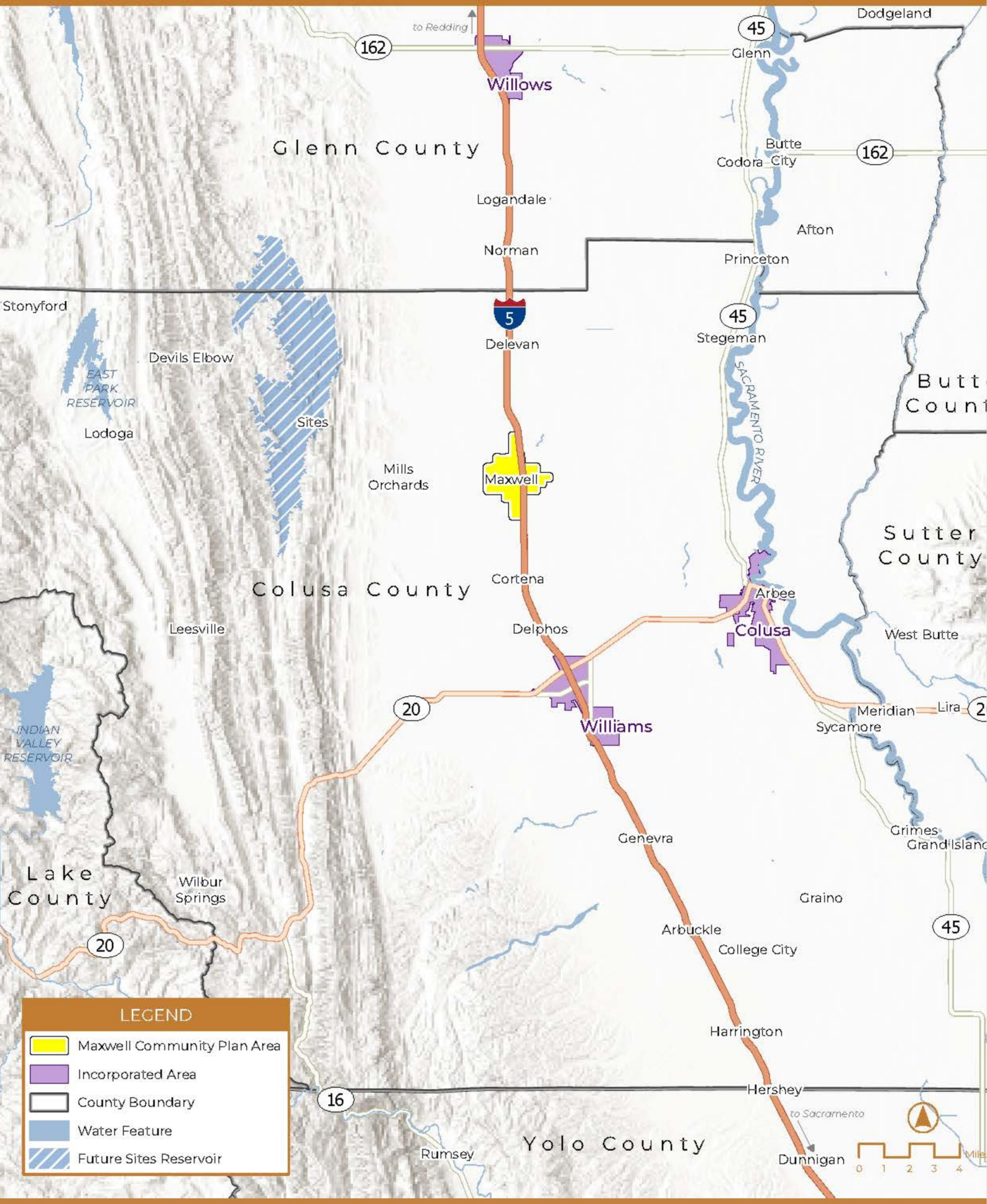

2.2.2: RECREATION AREAS

The Sites Reservoir Project would also include various recreational opportunities including the Peninsula Hills Recreation Area, a day use boat ramp off Sites Lodoga Road, and the Stone Corral Recreation Area. Figure 1 shows the proposed Sites Reservoir, recreation features, existing and proposed hydrological elements, and other relevant site features.

The Peninsula Hills Recreation Area would be accessed by the existing Sites Lodoga Road west of the reservoir. This recreation area would encompass up to 373 acres and would include a kiosk, access to potable water, picnic tables (with parking at each site), and hiking trails. There would be vault toilets, campsites (car and recreational vehicle), and a group camping area.

The Corral Creek Recreation Area would be located on the eastern shore of the Sites Reservoir, north of the existing Maxwell Sites Road and Sites Dam. Access would be provided from Sites Dam and Sites Lodoga Road near the eastern end of the bridge across the reservoir. This recreation area would encompass up to 235 acres and its facilities would include a kiosk, access to potable water, picnic sites (with parking at each site), and hiking trails. There would also be vault toilets and a number of campsites (car and recreational vehicle).

The day use and boat ramp would be located on the western side of the reservoir where the existing Sites Lodoga Road intersects with the proposed inundation area for the reservoir. A parking area would be added to the existing Sites Lodoga Road outside of the inundation area footprint of the reservoir. The boat ramp and parking area would encompass up to 10 acres and include a kiosk, access to potable water, and one vault toilet. The Sites Authority is also considering a recreation area on the north side of the reservoir within Glenn County, though this facility is still conceptual.

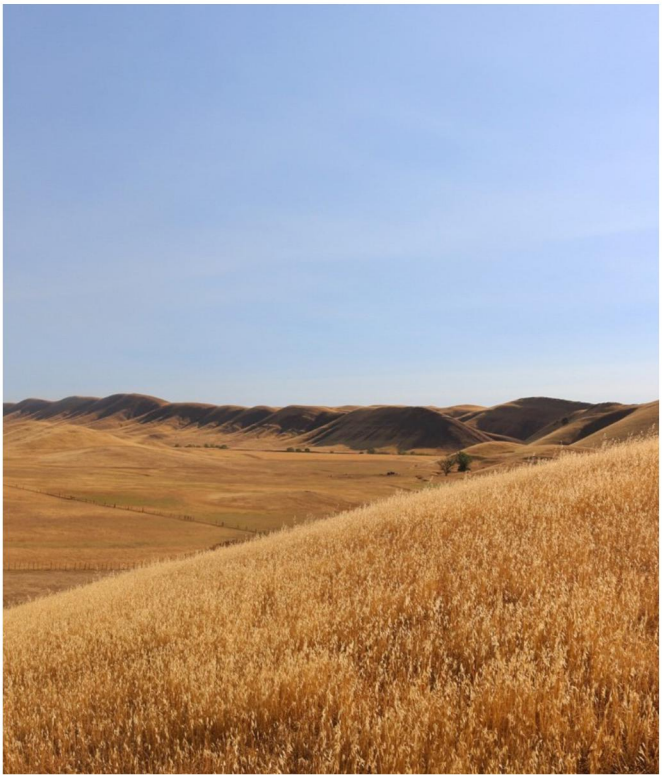

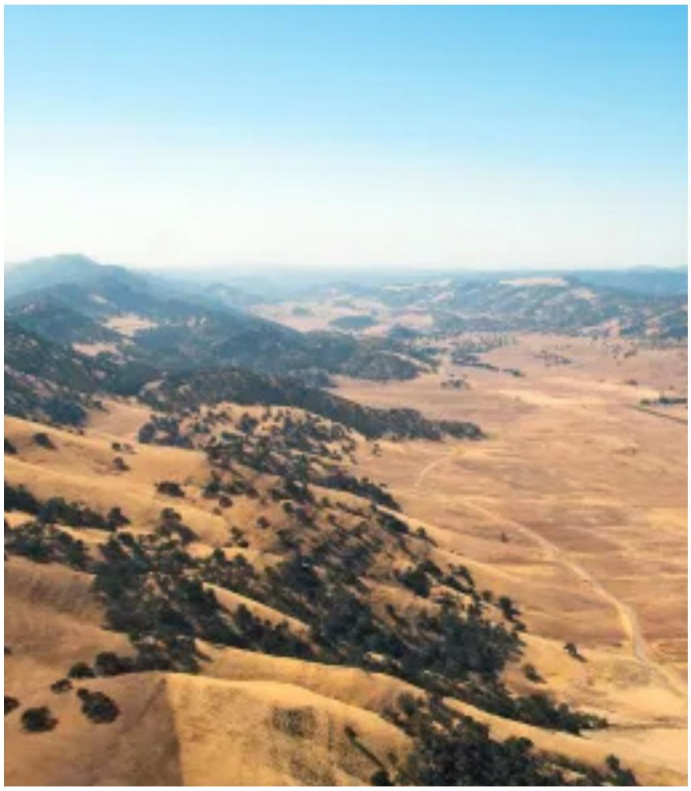

2.2.3: REGIONAL AND LOCAL CONTEXT

The Sites Reservoir would be located approximately 8 miles west of Maxwell. The Project site is located in a naturally occurring valley and crosses into Colusa, Glenn, and Yolo Counties The total size of the reservoir would be 1.5 million acres and potentially cover a significant amount of the resources, landscape, and existing infrastructure in the surrounding areas. The elevation of the Project site ranges between 1,000 – 2,000 feet above sea level. The unincorporated community of Sites currently contains a number of single-family houses, barns, and other miscellaneous structures (e.g. sheds, silos, and pumphouses). Adopting the most recent estimation of 2.88 persons per household in Colusa County, approximately 69 people are presumed to be living in Sites .The area around it is primarily vacant land dominated by grassland and hills. Along Maxwell Sites Road, Sites Lodoga Road, and Huffmaster Road, there are several single-family homes, agricultural sites, and farm equipment located near these homes. Sites Town Square is the unofficial designation of the intersection of these three roads, with the Sites Cemetery located to the west of this intersection.

Antelope Creek runs through the site area with several tributary creeks feeding into it throughout its length across the site area. These creeks are intermittent and may run dry during certain parts of the year. Grapevine Creek also runs through the Project site area. Both major Creeks would flow into the completed Sites Reservoir. East of the Project site is the Funks Reservoir that is fed and drained by the Tehama-Colusa Canal. East of the Funks Reservoir is the Glenn-Colusa Canal.

Following completion, the primary access road to the Sites Reservoir would be Maxwell Sites Road off of Interstate 5 that would cross the Reservoir with the proposed Sites Lodoga Road Bridge. Maxwell would be the closest community to the Project area and would serve as the gateway town for the completed Sites Reservoir.

2.2.4: SITES RESERVOIR CONSTRUCTION AND EMPLOYMENT

The construction of Sites Reservoir is anticipated to occur over an approximately 7-year period and may ultimately employ or use the services of 4,000 or more persons. Total employment needs will vary year by year throughout the duration of project construction, with years 2 and 4 projected to have the highest employment levels. At peak employment during year 2 of construction, 1,000 or more workers may be employed during construction operations. Year 7 is projected to have the lowest employment levels at approximately 158 workers employed.

The Sites Authority has projected that project jobs such as laborers, haulers, carpenters, and other trades have the potential to be sourced primarily from the local area, while more technical jobs such as operating engineers, would be sourced from outside of the local area. The Authority's analysis identified the "local area" as consisting of the counties of Colusa, Glenn, Yuba, Yolo, Butte, Placer, Sacramento, Shasta, Sutter, and Tehama.

Once construction of the reservoir is complete, the Authority estimates that approximately 35 people would be employed annually to oversee and manage operation of the reservoir.





EXISTING CONDITIONS

3.0: Summary

The Existing Conditions section provides an overview of the foundational elements shaping the community's planning area, detailing the regional and local context, current land use patterns, zoning designations, and utilities and infrastructure. This comprehensive understanding of existing conditions establishes a baseline for assessing opportunities and constraints in subsequent planning decisions.

The chapter is organized into the following sections:

3.1 Regional and Local Context

3.2 Utilities & Infrastructure

3.3 Land Use & Zoning

3.4 Development Capacity

3.5 Existing Site Inventory

3.6 Gateway Park

3.1.1: REGIONAL CONTEXT

Maxwell is an unincorporated community in the northeast of Colusa County, California. It is situated along the Interstate 5 (I-5) corridor in the northern portion of California's Central Valley. Maxwell is northwest from the City of Colusa, the seat of Colusa County, and north of the City of Williams. Maxwell is South, along I-5, of the Sacramento National Wildlife Refuge. To the west of Maxwell is a range of hills leading out of the Central Valley towards the Mendocino National Forest. From a regional perspective, Maxwell is approximately 62-miles northwest of the City of Sacramento and approximately 37-miles southwest of the City of Chico.

Regional highway access to Maxwell is provided primarily by Interstate-5, running north-south through the community and serving as the primary connection to Sacramento, other cities to the north and south, and other regional destinations. State Route 20 (SR 20) runs through the City of Williams, south of Maxwell, and provides primary east-west access to the City of Colusa and other destinations in the region.

The nearest regional rail access stations are the Amtrak Stations along the "Coast Starlight" route, located to the south in both Davis and Sacramento, and to the north in Chico. Maxwell is served by the Colusa County Transit Agency, which offers a dial-a-ride system and one half-day trip per month to Yuba City. Transit service from Maxwell connects residents to surrounding communities, including Williams, Colusa, and Yuba City, on a limited basis.

3.1.2: LOCAL CONTEXT

Maxwell is an agricultural community within the Northern Portion of California's Central Valley. The town was officially recognized sometime between 1874 and 1877. The first mention of Occident (later to become known as Maxwell) occurred in the Weekly Colusa Sunday newspaper in the issue of March 17, 1877 when it reported that "a new town had been laid out on the survey of the Northern Railroad about 10 miles north of Williams called Occident. Then, on September 14, 1878, the Weekly Colusa Sunday Newspaper reported that "the Railroad Company had decided to call the town formerly known as Occident, Maxwell".

The community is largely composed of single-family residential neighborhoods with commercial uses located throughout the community, primarily along Old Highway 99W and Oak Street. Commercial, with industrial uses on the same road both in the outer areas of the community. Highway-serving commercial and additional industrial uses are along Maxwell Road concentrated near the on/off-ramps for I-5. Public and community uses in Maxwell include a community park, little league field, Maxwell Elementary School, Maxwell Middle School, and Maxwell High School.

As of 2022, Maxwell had population of 1,181 residents, which represents about 5.4% of the broader Colusa County population (21,811 residents). The median age of Maxwell residents is 30 years old. Maxwell has an estimate of 438 housing units and an average of 2.91 persons per household in owner-occupied units, and 3.17 persons per household in renter-occupied units. As of 2022, just about 11%, or 48 of the housing units in Maxwell are vacant. Of the occupied units, some 58% are owner-occupied while 42% are renter occupied. The median annual household income as of 2022 was approximately $64,000 with some15.7% of households below the poverty level.

Maxwell's economic characteristics are dominated by local agricultural operations with 42% of the working population employed by the agricultural sector. Other significant sectors include manufacturing (15% of workers) and public administration (14% of workers). Other employment sectors with a lesser percentage of the larger employment stock are educational services, transportation, utilities, construction, retail, and wholesale trade. The total number of employed residents in Maxwell, as of 2022, was 827, approximately 70% of the population.

Within the community itself there are few commercial uses including the Maxwell Inn, Bar, and Grill, Caldwell's Mini Mart, BM Bar Custom Meats, Herreras Bakery, Cy A. Hawkins Insurance, Grow West, and Pacific Metal Buildings . There are several public administration and utilities services operating out of Maxwell including the Maxwell Public Utility District, the Colusa County Road Department, the EnviroPro Energy Company, and the Sites Project Authority. The community is also served the Maxwell Branch Library of the Colusa County Library, and the Maxwell Parks and Recreation District.

According to the most recent employment data provided by the United States Census Bureau, approximately 220 of those employed at jobs in Maxwell live elsewhere and commute into the community for work. Approximately 298 of residents who live in Maxwell are employed elsewhere and commute to other areas for work. Approximately 18 people both live and work in Maxwell. The average commute time of workers living in Maxwell is approximately 21 minutes. These disparities are likely impacted by the large percentage of workers employed by agricultural operations, and the industrial/construction sector, that typically require commuting outside of the community. The relative lack of jobs for those who live in Maxwell can also be attributed to its small size and location in Colusa County.

3.2: Utilities & Infrastructure

3.2.1: WATER

Water supplied to Maxwell comes from two sources: groundwater and surface water. As with all of Colusa County, domestic water is supplied with groundwater, while most irrigation systems are supplied with surface water. Water supply and distribution is managed by the Maxwell Public Utilities District (MPUD). The municipal water uses in Maxwell are supplied by three groundwater wells that have a total combined capacity of 1,225 gallons per minute (GPM). The District serves over 400 residential connections with a maximum daily pumping capacity for the three groundwater wells is 2,016,000 gallons per day (GPD) compared to an average daily pumping demand of 326,483 GPD, which is more than enough to support existing demand.

3.2.2: SOLID WASTE

Solid waste services in Maxwell is provided by Recology and coordinated in cooperation with Colusa County. The nearest solid waste facility is the Maxwell Transfer Station located just south of Maxwell on Old Highway 99. The facility's existing capacity, in conjunction with other nearby facilities, is adequate to support the solid waste needs of Maxwell and Colusa County as a whole. Currently, there is no program in Colusa County to handle and dispose of hazardous waste.









3.2.3: WASTEWATER/SEWER

Wastewater and sewage services for Maxwell are provided by the Maxwell Public Utilities District through the MPUD Wastewater Treatment Plant (WWTP) located adjacent to I-5. The MPUD WWTP is rated for an average permitted capacity of 0.2 million gallons per day (MGD). During periods of higher precipitation, the average flow is largely impacted by infiltration and inflow, with average flows reaching over three times the average capacity. The permitted capacity for the WWTP currently will allow for nearly 400 new service connections, allowing for continued service as the community grows.

3.2.4: PARKS

Public Parks in Maxwell are overseen and managed by the Maxwell Parks and Recreation District, a special district formed under the authority of State law. The only public park within Maxwell is the Maxwell Community Park located on Maxwell Unified High School District property west of South Pacific Street southeast of the Maxwell High School. The amenities offered at this park include a playground, picnic tables, multi-use sports fields, and the Maxwell Little League field. Maxwell Community Park is also located directly adjacent to the Maxwell Rodeo arena. Given the relatively small size of the community, the park is within 1-mile of the developed area of Maxwell and can be considered within walking distance of most homes.

3.2.5: SCHOOLS

The education of Maxwell residents is provided for by the Maxwell Unified School District (MUSD). MUSD offers K-12 education at two different school sites: Maxwell Elementary & Middle School, and Maxwell High School. Maxwell Elementary & Middle School is located along North Street and has an enrollment of 143 K-5th students, and 83 6th-8th students as of the 2022-2023 school year. Maxwell High School is located along Oak Street and has an enrollment of 114 students as of the 2022-2023 school year.

3.2.6: FIRE

As an unincorporated community in Colusa County, Maxwell is provided fire protection services through the Maxwell Fire Protection District. The Maxwell Fire Protection District is one of six independently governed rural fire protection districts established in the County to provide fire response services to unincorporated areas of the County. In addition, the City of Colusa has its own fire department and the City of Williams' fire department was merged with the Williams fire district in 1994 forming the Williams Fire Protection Authority. These districts operate out of their stations located within their respective communities and are responsible for providing structural and wildfire protection as well as medical emergency services. The majority of calls received within the Maxwell Fire Protection District are for medical emergencies.

Each fire district is provided a rating, known as a Public Protection Classification (PPC), by the Insurance Service Office (ISO), ranging from 1-10. Lower ratings generally represent superior fire protection, while higher ratings represent poorer fire protection. The PPC rating for the Maxwell Fire Protection District ranges from 5-8 depending on geographic proximity to the Maxwell Fire Station, and on building density within the surrounding area.


RAIL ROAD CROSSING
REPORT PROBLEM
OR EMERGENCY
1-800-800-2203
X-ING 750 415C
California Northern Railroad

3.2.7: POLICE

As an unincorporated community in Colusa County, Maxwell is provided police protection and general emergency services by the Colusa County Sheriff's Department through a substation located along Old Highway 99. The County Sheriff's Department also operates the Office of the Coroner and the County Office of Emergency Services. The County Sheriff's Department provides a multitude of services through various units, including:

- The Investigations Unit,
- The Colusa County Volunteer Citizens Service Unit (V.C.S.U.),
- The Search and Rescue Team (SAR),
- The Civil Unit,
- The Communications Center

3.3: Land Use & Zoning

3.3.1: EXISTING GENERAL PLAN LAND USE DESIGNATIONS

Figure 2 shows a breakdown of the existing land use designations for Maxwell as established by the Colusa County General Plan. As shown, Maxwell is a majority-residential community, with commercial uses located along the major circulation routes of I-5 and Maxwell Colusa Road/Oak Street. These uses are placed along major streets and I-5 to maximize the potential of tourists and non-residents stopping to shop at local businesses. The mixed-use land uses on either side of Oak Street comprise what is considered the downtown commercial center of Maxwell.

Uses allowed in the community include a mix of retail, office, low-density residential, industrial sites, cultural and public serving uses (such as a post office, a library, places of worship, a recreational park, and a police sub-station). Characteristics of the community include a vehicle-oriented environment given its proximity to I-5, some mixed-use development, a combination of different housing types, few commercial businesses, sparse light industrial uses, and heavy agricultural uses in the surrounding area.

3.4: Development Capacity

3.4.1: RESIDENTIAL CAPACITY

Relative to the overall size of Maxwell, there is a considerable number of vacant lots currently zoned for additional residential development. There are currently 17 vacant parcels (301.2 acres) zoned for R-1-8 single-family homes, and 26 vacant parcels (61.91 acres) for R-1-6 single-family homes. Based on the residential densities established in the County's General Plan and Zoning Code, this vacant land has a theoretical capacity to yield up to 1,536 new housing units. There are currently 10 vacant parcels (17.64 acres) zoned R-4 for apartments, with a theoretical yield of up to 265 potential housing units. Overall, Maxwell has a capacity to accommodate an estimated 1,800 potential housing units, based on the current zoning and land use maps.

This potential build-out for residential development provides Maxwell with the capacity to support an expansion of the population should it be needed, without having to rezone land or identify new areas for urban-type development. A potential increase in housing demand from the Sites Reservoir Project, especially during the construction phase, could be supported, in part, by building out the existing housing capacity present in Maxwell.

3.4.2: COMMERCIAL AND INDUSTRIAL CAPACITY

There is also a significant capacity to build out Maxwell's commercial sector. For smaller commercial developments, there are currently 5 vacant parcels (25.38 acres) that are zoned C-2 for Community Commercial development. Additionally, there are 15 vacant parcels (158.58 acres) that are zoned C-H for Highway Service Commercial. This capacity for additional commercial businesses in Maxwell can support both smaller, local, businesses with additional C-2 development, and expand tourist-facing businesses with C-H development. Expanded economic opportunities from the Sites Reservoir Project, such as a need for additional retail and commercial businesses to support an expanded workforce during the construction phase, could be supported with existing commercial capacity in Maxwell.

Maxwell's existing capacity for further industrial development is also substantial. There are 8 vacant lots (208.02 acres) zoned as Light Industrial, and 10 vacant lots (528.56 acres) zoned as Heavy Industrial. Given the significant amount of potential build out in Maxwell's industrial sector, there is ample room to support future development in the community.

Figure 2. Land Use Map

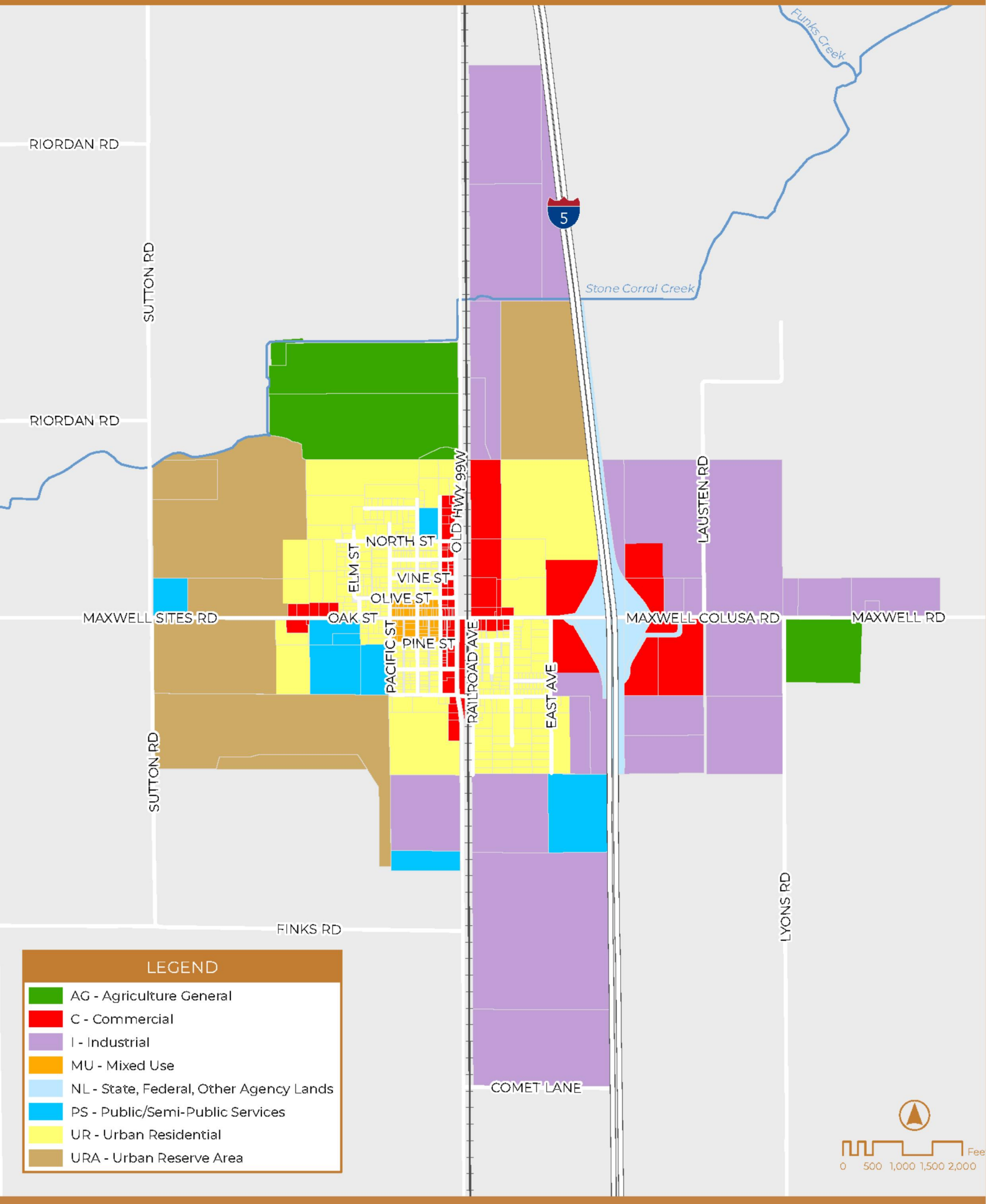

3.5: Existing Site Inventory

The following discussion provides an overview of the site inventory conducted during a site visit to Maxwell, aimed at assessing current conditions and identifying key opportunities for development.



Residential

Residential units consists of varying conditions ranging from well-maintained to those in need of repairs.



Commercial

Commercial units are well-maintained while vacancy rates vary, with several properties unoccupied.



Office

A noticeable number of office units are vacant, contributing to an overall sense of underutilization in the community.



3.6: Gateway Park

3.6.1: CONCEPTUAL PARK PLAN

During the development of the Maxwell Community Plan, the County conducted multiple community workshops to help identify needs and challenges to be addressed in the Community Plan. During these workshops, several members of the community noted the need for public restrooms and a public community gathering space near the Interstate 5 interchange. The public noted that an increase in local visitors traveling to Sites Reservoir, as well as an influx in temporary Sites Reservoir workers, would generate a demand for basic “rest stop” services open to the public:

The park plan outlined below is conceptual in nature, and an exact location has not been determined at this time. It is assumed that the gateway park would be approximately one-acre in size, and would be located in close proximity to I-5, west of the freeway.

The park should be designed to reflect Maxwell’s character, and should serve as an attractive and functional gateway to the community. Key components of the park, as shown on the illustrated figure could include:

1. *Parking Area*
2. *Restrooms*
3. *Pet Relief Area*
4. *Shaded Picnic Tables*
5. *Open Gathering Area*
6. *Gateway Signage*


VERNON JEWEL DANLEY
POST 218
AMERICAN LEGION
HUDSON HUB-BUCHANAN MEMORIAL

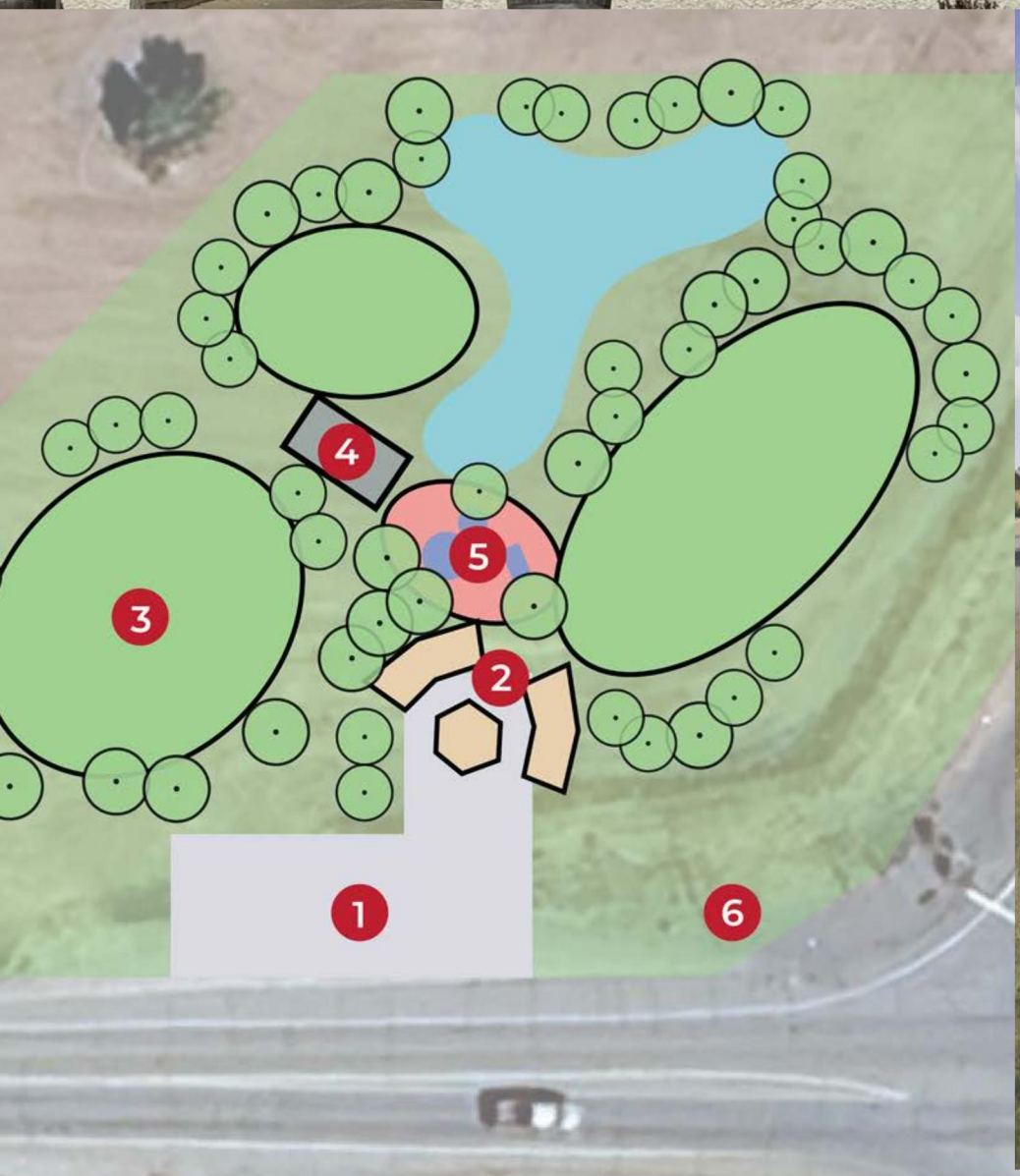
1
2
3
4
5
6


WELCOME TO
MAXWELL
Community • Small Town • Family



PROCESS & OUTREACH

4.0:Scope and Preparation

To-date, the community outreach efforts have focused on the Maxwell Community Plan. The outreach program has included a series of in-person workshops and community polling exercises which were conducted to provide op- por- tunities for community members, public agencies, and stakeholders to discuss their concerns and potential opportunities for the Maxwell area in light of the pending Sites Reservoir Project. As a part of the public outreach program, De Novo Planning Group and Colusa County staff held multiple community meetings to gather feedback and input from members of the public. These meetings and workshops included the following:

- *Board of Supervisors (BOS) Kickoff Meeting on 5-21-24*
- *Sites Authority Workshop on 6-20-24*
- *1st Maxwell Community Workshop on 6-20-24*
- *2nd Maxwell Community Workshop on 7-24-24*

The first two meetings, the BOS Kickoff Meeting and the Sites Authority Meeting, were solely informative, meant to introduce the project to the community and interested parties, as well as disperse general information regarding the project's details and future outreach meetings. The 1st Community Workshop was meant to receive comments and feedback from the public regarding the project to identify areas of concern or opportunities for improvements throughout the project area. The 2nd Community Workshop included a vision board activity and a post-it note activity to streamline the feedback process and receive input from the public regarding specific short-term and long-term opportunities and challenges the project may face.

The outreach program for this project is inclusive, educational, and designed to facilitate a meaningful conversation with residents of Colusa County to best understand the issues and challenges facing the area to be addressed by the Sites Reservoir Area Plan and the Maxwell Community Plan.

Community Outreach Efforts

Workshop details and feedback received are described below.

The Outreach Summary report is included as Appendix A.



Board of Supervisors

The Board of Supervisors held a kickoff meeting for the Maxwell Community Plan to introduce the planning efforts for the Maxwell Community Plan and detail the overview of the Sites Reservoir Project.

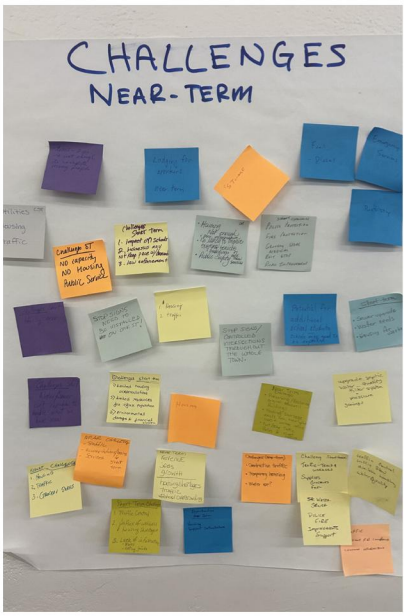

Sites Authority Workshop

The Sites Authority Meeting served as an introductory session to inform the Maxwell community and interested stakeholders about the Sites Reservoir Project, providing an overview of project details, anticipated benefits, and upcoming outreach opportunities to encourage community engagement and feedback.



Maxwell Community Workshops

De Novo Planning Group hosted two informational community workshops, along with Colusa County. These meetings were intended to gather feedback and comments from residents of Colusa County, local agencies, and other stakeholders regarding the Maxwell Community Plan and the Sites Reservoir Area Plan.

Scan the Barcode or visit the County of Colusa Website for more information.
www.countyofcolusaca.gov

Community Discussion

While there was no formal activity undertaken at the meeting, there was an opportunity for the community to provide their input. The responses from this informational meeting were collected and sorted according to the broad project category to which they apply.

The community feedback can be broadly categorized into multiple issues and topics: traffic concerns, public utilities, economic development, funding, emergency services, and general community concerns. Throughout the discussion, many respondents expressed concerns about how increased traffic and changes to roadways may affect broader public safety. Participants expressed a desire for re-routing roadways towards commercial centers to improve economic development.

Another prominent concern raised was the potential to improve local utilities (water, sewage, drainage, etc.) to better meet both existing service demands, as well as potential increased service demands. Broader community concerns were raised about pedestrian safety during the construction process, especially regarding children near schools. Additionally, members of the community expressed concerns about temporary housing during the construction process and permanent housing to improve housing stock throughout the area.

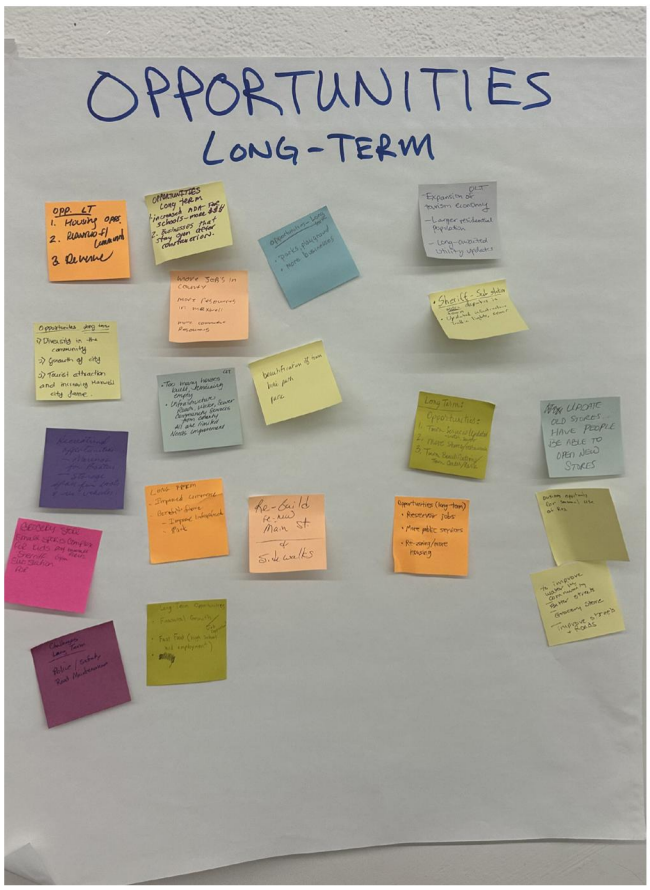



Post It Notes

The public was encouraged to provide feedback and comments on the project through a post-it note activity. The display boards for this activity were divided into four categories: Challenges (Near-Term), Challenges (Long-Term), Opportunities (Near-Term), and Opportunities (Long-Term). This allowed members of the public to provide specific feedback on the project's near- and long-term opportunities and challenges that can be considered by both De Novo Planning Group and Colusa County.

The responses from participants show numerous trends in what members of the public view as opportunities and challenges that will come from this project. Many members of the public responded that temporary housing for construction workers will be necessary, and potentially will cause additional strain on an already limited housing stock in the area. Water quality and sewer capacity were also common issues raised with many respondents stating that expansions and updates of water infrastructure will need to occur. Other members of the public stated that traffic issues may arise as construction of the Sites project occurs. Often in conjunction with traffic concerns, were concerns about safety for residents, specifically near schools.

Regarding opportunities, trends about economic development, increased housing stock, employment opportunities, and community beautification were common among respondents. Many members of the public stated a desire for increased economic diversity that could expand the number and type of businesses in the area.Others stated that the project would bring opportunities for employment during the construction cycle, as well as after. The necessity of temporary housing stock brought comments about the desire to increase the overall housing stock in the area, as many felt that there is a lack of housing already. Some respondents saw these projects as an opportunity to improve parts of the community, namely the utility infrastructure for water and sewer lines, as well as expanding open space and public parks throughout the area. The broad desire for community beautification was expressed for both near- and long-term opportunities for these projects.

Visioning Boards

The public was encouraged to provide feedback and comments on the project through a visioning board activity that displayed a map of the site, with space to attach post-it notecards with comments. Five vision boards received comments, with board four having two sets of comments (4A and 4B). This activity allowed members of the public to provide broad feedback on the project that can be considered by both De Novo Planning Group and Colusa County. The responses from this informational meeting were collected and are stated in the Outreach Summary Report which can be found on the project website.

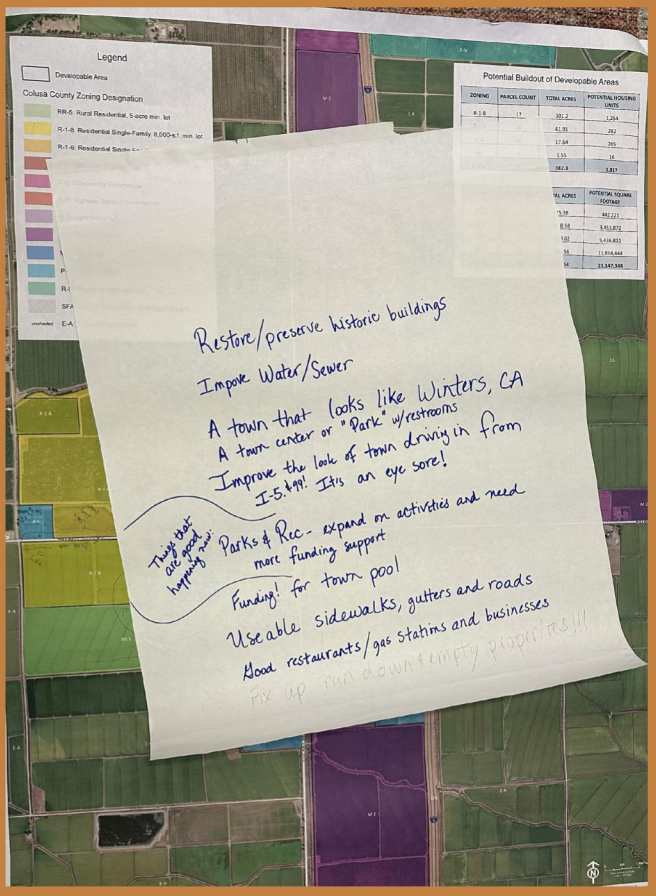





KEY ISSUES

5.0: Summary

The Key Issues section of the Maxwell Community Plan addresses critical challenges and opportunities facing Maxwell, as articulated and expressed by the community, local agencies, and other stakeholders. This section provides a comprehensive overview of pressing issues such as balancing growth with agricultural land preservation, managing water resources, enhancing transportation networks, and ensuring equitable access to services and amenities. By identifying these areas of focus, the Key Issues section sets the foundation for targeted strategies that guide Maxwell toward a sustainable future.

5.0.1: DIRECTION FOR MAXWELL

The Colusa County 2030 General Plan provides direction and guidance for the future development of Maxwell. The network of policies and actions relating to Maxwell focus on capitalization on economic development opportunities, emphasis on design and aesthetics, support for the downtown area, beautification/ restoration of historic properties, increased housing opportunities, requiring connections to municipal utility services for new developments, and establishing new funding mechanisms for said goals.

The General Plan's Community Character Element provides a set of policies that guide future development to support the above-stated goals while ensuring the distinct character of Maxwell is preserved and invigorated. Capitalizing on Maxwell's role as a gateway to existing and future recreational opportunities can be expanded to provide passive recreational opportunities that serve both residents and visitors near the Interstate 5 connection to the east of Maxwell. The General Plan supports rehabilitation and improvements for existing buildings, specifically those with historic character, through updating design guidelines and updates to signage to enhance the aesthetics and unique design opportunities in the downtown area.

Goals for economic development throughout Maxwell are multi-faceted; emphasizing the expansion of industrial, highway commercial, and agricultural uses along the I-5 corridor and revitalization of the downtown area through the use of underdeveloped and vacant lots. Pursuing these goals can support economic diversification and long-term growth and stability of Maxwell while also solidifying the downtown area as the commercial and social core of the town. Improved pedestrian and active transportation connections between the downtown and residential neighborhoods can be supported through infrastructure improvements to sidewalks, pedestrian pathways, and the development of bicycle lanes.

The General Plan also provides a framework for pursuing funding opportunities for community beautification and economic development. Applications for Community Development Block Grant/Technical Assistance and Economic Development Allocation funds, as well as partnerships with local businesses and interested parties can provide needed funds to support existing/ new opportunities. Further exploration into Main Street Programs and the establishment of business districts also provides additional funding for broader goals set forth in the General Plan.

Appendix B details the Colusa County General Plan policies.

> **If the Sites Reservoir project is approved, develop a Maxwell Community Plan to capitalize on economic development opportunities, including lodging, shopping, dining, and other tourism uses, created by increased visitors and County residents using Sites Reservoir. The Maxwell Community Plan shall emphasize aesthetic and design standards that recognize the historic character of Maxwell and importance of the area as the gateway to recreation opportunities in the western County.**





PLAN & IMPLEMENTATION

6.0: Summary

The Implementation section of the Maxwell Community Plan outlines how the vision for the Plan Area will be realized through a set of strategies that support the broader vision statement. This vision statement offers an aspirational description of the desired look, feel, and functionality of the community, while the strategies within this chapter provide a framework for county actions in order to fufill the desired vision.

6.0.1: STRATEGIES

Maxwell faces typical challenges encountered by rural economies, such as a limited job market, reliance on seasonal agricultural work, and vulnerability to economic cycles. Construction and subsequent operation of the Sites Reservoir offers an opportunity to bolster the local economy by catering to the influx of short-term construction workers and attracting industries related to recreation and tourism, agribusiness, and renewable energy over the longer term.

The strategic actions presented on the following pages provide a focused plan that can help the County and the Maxwell community realize benefits across several categories of need, and can help shape a positive future for the community. The following actions will help the community realize its goals and objectives for the future, and provide a roadmap for the County and community.

These strategic actions address the topics of housing, infrastructure, community facilities, community safety, economic development, and Downtown Maxwell.

Housing

H-1 *The County should consider amending the Zoning Code to provide for the ability of local landowners to establish temporary workforce housing utilizing recreational vehicles. The Zoning Code amendment should consider such factors as the permit process, appropriate locations and zoning districts, development standards, temporary utility provisions, the need for transit occupancy tax, and post construction restoration requirements.*

H-2 *The County should establish standards and provisions that ensure that any properties used for temporary workforce housing during the construction of Sites Reservoir are not permitted to provide ongoing temporary housing following reservoir construction. These provisions should include standards and requirements that ensure any trailers or other temporary housing units are removed, that the site is cleaned of all waste and housing remnants, and that any temporary support infrastructure such as fencing or restrooms are removed.*

H-3 *The County should consider amending the Zoning Code to allow residential properties that were re-zoned to commercial uses in the County's comprehensive 2014 Zoning Code update to construct accessory dwelling units (ADUs) under similar requirements as residential zoned properties.*

H-4 *The County should consider amending its Zoning Code to allow rental housing units to be established on commercial zoned property in the downtown Maxwell area, and potentially the downtown areas of the other unincorporated communities throughout the County of Colusa.*

H-5 *The County should consider amending its Light Industrial Zoning District to permit the establishment of Mobile Home and Special Occupancy Parks.*

H-6 *The County should explore how to further streamline its ADU permit process which could include the development of a set of pre-approved building permit plans for ADU's.*

H-7 *The County should seek to stabilize and improve housing conditions in existing residences and neighborhoods in Maxwell by seeking state and/ or federal funding through CDBG, HOME, BEGIN, and/ or Cal HOME for housing rehabilitation and/ or home ownership activities on a regular basis.*

H-8 *The County should explore a range of tools and strategies to spur additional permanent housing development in Maxwell. Strategies may include, but are not limited to, streamlined development permitting, reducing permitting fees, assistance with infrastructure costs and extensions, and other strategies to reduce the cost of housing unit construction.*

H-9 *The County should encourage the Sites Authority to include provisions in their contracting requirements to encourage Site Reservoir construction firms to provide assistance to the local community to rehabilitate existing housing units to be used for both short term and long term permanent construction workforce housing.*

H-10 *The County should consider expanding code enforcement activities in Maxwell to identify dilapidated and sub-standard housing units, and connect owners with resources that provide financial assistance to improve the condition of their housing units.*

Infrastructure

I-1 *The County should support ongoing efforts by the Maxwell PUD to help ensure sufficient municipal services and infrastructure to meet short- and long-term needs of the community. This may include, but is not limited to, proactively pursuing funding opportunities, including State and federal grants, fees, taxes and assessments, and other funding sources to:*

- *Replace antiquated concrete wastewater conveyance piping with modern PVC pipes.*
- *Expand water treatment capacity and/or secure new land to drill a new water well to replace Well #6.*
- *Extend water and sewer conveyance lines east of I-5.*

I-2 *The County should require new urban development (commercial, residential, and industrial) to connect to municipal water and wastewater services provided by the Maxwell PUD, consistent with the requirements established in the General Plan. Exceptions may be granted for temporary or short-term workforce housing, provided that it can be demonstrated that adequate and water and wastewater services can be provided.*

Community Facilities

CF-1 *The County should support the Maxwell Park and Recreation District in constructing a gateway entry park west of I-5 along Maxwell Colusa Road or Old Highway 99. The gateway park should have distinct and well-designed signage, signaling to visitors that they have entered the community of Maxwell, and should include public restrooms and a pet relief area. The gateway park should also include features such as lawn areas, shade, and picnic tables.*

CF-2 *The County should support the Maxwell Park and Recreation District as it seeks opportunities to expand parks and recreational facilities in the community through the acquisition of additional lands and the improvement and expansion of existing facilities.*

CF-3 *Support the Maxwell Unified School District in campus beautification efforts and maintenance of joint-use recreational facilities.*

Community Safety

CS-1 *The County should prepare for an increased number of Sheriff's response calls during both the construction and operational phases of the Sites Reservoir project, and provide increased staffing levels and patrol frequency, as needed, to ensure community safety.*

CS-2 *The County should support the Maxwell Fire Protection District in their mission to provide excellent fire and EMS services to the community. Identify additional demand caused by increases in temporary worker populations and increased tourism and visitors following completion of Sites Reservoir.*

CS-3 *In collaboration with the Maxwell Unified School District, seek to establish and implement a Safe Routes to School Program. The Program should identify key intersections and roadways in the vicinity of local schools that may require safety upgrades such as stop signs, crosswalks, sidewalks, etc. Improvements should be made prior to the start of the construction of Sites Reservoir.*

CS-4 *Coordinate with the Sites Authority and the Sheriff's Department to ensure that the truck and construction roadway segments identified in the Sites Reservoir Environmental Impact Report (EIR) are used throughout the duration of construction activities at Sites Reservoir, and truck and worker vehicles are not utilizing non- approved local roadways in Maxwell.*

CS-5 *Monitor pavement conditions throughout the community and correct existing deficiencies. A reassessment should be completed following construction of Sites Reservoir.*

CS-6 *Encourage the Sites Authority to include provisions for local roadway improvements and post-construction roadway repair in contractor bids and in ongoing agreements with the County.*

Economic Development

ED-1 *The County should focus business attraction on a two-pronged strategy – short-term/temporary solutions for the short-term influx of workers through Maxwell, and long-term solutions for future tourism expansion.*

ED-2 *The County should consider amending the Zoning Code to include provisions that allow food trucks, other mobile/temporary businesses, and workforce park-n-ride lots to be located on commercially and industrially zoned parcels in Maxwell during the multi-year construction phase of the Sites Reservoir Project.*

ED-3 *The County should consider collaborating with local land owners to identify potential hotel development sites near I-5 and work closely with a hotel site selector to determine the feasibility of establishing a new hotel in Maxwell.*

ED-4 *The County should encourage local landowners to rehabilitate existing vacant commercial spaces for permanent business locations, and encourage the establishment of tourist-serving business such as boating/fishing, supplies, food service, etc. Consider incentives such as tax breaks or grant funds to attract developers, and leverage existing business assistance initiatives (including CDBG participation and small business programs).*

ED-5 *The County should strongly encourage the Sites Authority to include local hiring requirements in all contractor bids, and proactively work with the North Central Counties Consortium to establish and implement local labor training programs to upskill the existing local labor force to meet the needs of Reservoir construction activities.*

ED-5 *The County should use the visitor-serving potential of the Sites Reservoir to develop a broader tourism marketing program for Colusa County. Engage with regional tourism marketing partnerships to promote Sites Reservoir as a destination for the Sacramento Valley.*

ED-5 *The County should encourage and facilitate the expansion of energy-based jobs and economic development opportunities in Maxwell on industrial sites physically separated from sensitive receptors. The County should update the Zoning Code to allow uses such as hydrogen production, biomass cogeneration, underground hydrogen storage, etc. by right in appropriate industrial zones, and develop standards for setbacks, operational safety and storage requirements, and site security.*

ED-5 *The County should identify a County grants coordinator, and partner with the Sites Authority, to proactively pursue state and federal funds to implement improvements identified in this plan.*

Downtown Maxwell

D-1 *The County should prepare and adopt Design Guidelines for Downtown Maxwell. The Guidelines should include provisions for residential and commercial design standards, streetscape and public space beautification, and preserve and protect the historic character of Downtown Maxwell.*

D-2 *The County should take proactive steps to improve the physical appearance and economic vitality of Downtown Maxwell. Strategies for consideration may include:*

- *Formation of a Community Facilities District (CFD), which is a special tax district that could fund public improvements and on- going services within the Downtown. Parks, streets, sewer improvements, and public safety services are some of the public improvements and services that may be financed by a CFD.*
- *Facilitate building façade and exterior improvements assistance program for Downtown Maxwell.*
- *Invest in landscaping and street improvements to boost general awareness, enhance walkability and vitality, and attract visitors.*


MAXWELL
INN
BAR & GRILL
OPEN



COLUSA COUNTY

— CALIFORNIA —

Colusa County
Community Development
1213 Market Street, Colusa CA
Phone: 530.458.0480

Appendix A: Outreach Summary Report

INTRODUCTION

This report summarizes the public participation and input received during the initial community outreach meetings and workshops for the Sites Reservoir Area Plan and the Maxwell Community Plan for Colusa County.

The Maxwell Community Plan is being prepared to address the provisions of the Colusa County General Plan Community Character Element, including **Action Item CC 2-G,** which calls for the development of a Maxwell Community Plan to capitalize on economic development opportunities, including lodging, shopping, dining, and other tourism uses, created by increased visitors and County residents using the Sites Reservoir[1]. The Colusa County General Plan further directs that the Maxwell Community Plan shall emphasize aesthetic and design standards that recognize the historic character of Maxwell and importance of the area as the gateway to recreation opportunities in the western County.

The Site's Reservoir Area Plan is being prepared to address the provisions of the County's General Plan Land Use **Goal LU-4** and related Land Use Policies that call for the development of clear land use objects and standards to address the unique needs and conditions associated with the Sites Reservoir[2].

To-date, the community outreach efforts have focused on the Maxwell Community Plan. The outreach program has included a series of in-person workshops and community polling exercises which were conducted to provide opportunities for community members to discuss their concerns and potential opportunities for the Maxwell area in light of the pending Sites Reservoir Project. As a part of the public outreach program, De Novo Planning Group and Colusa County staff held multiple community meetings to gather feedback and input from members of the public. These meetings and workshops included the following.

- Board of Supervisors (BOS) Kickoff Meeting: 5-21-24
- Sites Authority Workshop: 6-20-24
- 1st Maxwell Community Workshop: 6-20-24
- 2nd Maxwell Community Workshop: 7-24-24

The first two meetings, the BOS Kickoff Meeting and the Sites Authority Meeting, were solely informative, meant to introduce the project to the community and interested parties, as well as disperse general information regarding the project's details and future outreach meetings. The 1st Community Workshop was meant to receive comments and feedback from the public regarding the project to identify areas of concern or opportunities for improvements throughout the project area. The 2nd Community Workshop included a vision board activity and a post-it note activity to streamline the feedback process and receive input from the public regarding specific short-term and long-term opportunities and challenges the project may face.

The outreach program for this project is inclusive, educational, and designed to facilitate a meaningful conversation with residents of Colusa County to best understand the issues and challenges facing the

[1] *Colusa County, 2012. Colusa County General Plan – Community Character Element. Page 4-8.*

[2] *Colusa County, 2012. Colusa County General Plan – Land Use Element. Page 8-30.*

area to be addressed by the Sites Reservoir Area Plan and the Maxwell Community Plan. Workshop details and feedback received are described below.

MAXWELL COMMUNITY WORKSHOP #1



Activity: Community Discussion

De Novo Planning Group hosted an informational community workshop, along with Colusa County staff, on June 20th, 2024 at the American Legion Building located at 250 Oak Street in Maxwell, CA. This meeting was intended to be an informational session for members of the public to learn about the upcoming development of the Maxwell Community Plan and the Sites Reservoir Area Plan. Approximately 100 members of the public attended this meeting. The public was encouraged to provide feedback and comments on the project. While there was no formal activity undertaken at the meeting, there was an opportunity for the community to provide their input. The responses from this informational meeting were collected and sorted according to the broad project category to which they apply.

The community feedback can be broadly categorized into multiple issues and topics: traffic concerns, public utilities, economic development, funding, emergency services, and general community concerns. Throughout the discussion, many respondents expressed concerns about how increased traffic and changes to roadways may affect broader public safety. Participants expressed a desire for re-routing roadways towards commercial centers to improve economic development.

Another prominent concern raised was the potential to improve local utilities (water, sewage, drainage, etc.) to better meet both existing service demands, as well as potential increased service demands. Broader community concerns were raised about pedestrian safety during the construction process, especially regarding children near schools. Additionally, members of the community expressed concerns about temporary housing during the construction process and permanent housing to improve housing stock throughout the area.

Community Feedback	
Traffic Concerns	**Public Utilities**

• Ensure valid access points and routes to the site, access via RD 168 isn't ideal
• Weather conditions (Fog, low visibility, etc.) raises additional safety concerns
• Construction may necessitate additional roadway planning by Colusa County
• Local businesses may prefer that traffic is routed through the town (economic benefits)
  ○ Potentially routing traffic to a larger regional area through multiple areas (i.e. Williams) for broader economic development benefits
• Additional stop signs and traffic calming elements near the high school
• Increased traffic may necessitate a rest stop that is both available to the public and well-maintained
  ○ Dog park, restroom, park space, etc.
• Concerns over roadway breakdowns caused by construction vehicles
  ○ Will there be reconstruction after initial development is completed?
	• Improve local utilities (water, sewage, drainage infrastructure, etc.)
	  ○ Can these improvement opportunities be leveraged to correct existing deficiencies in service capacity?

Economic Development	**Funding**

• Potentially including more commercial businesses to support economic development and expansion: grocery store, restaurants, bars, etc.	• Grant opportunities for basic utility infrastructure improvements?
	• Funding assistance for homeowners for ADU's to accommodate short-term construction rentals
	  ○ Find standardized ADU plans that are: pre-approved, have reduced fees, lower permit costs, expedite ADU construction process
	• Explore funding opportunities for Colusa County from the Sites Authority
	  ○ Are these funding opportunities applicable to roadway and utility upgrades

Emergency Services	**Community Concerns**
• Fire protection services and emergency services operations and plans will need to be assessed and analyzed to understand potential need for capacity expansion to meet increased demand	• Identify and analyze potential impacts on schools and identify ways for the Sites' Reservoir project to fund improvements • Identify opportunities to expand local sidewalks and pedestrian pathways • How will Maxwell's potential population increase be estimated post-construction of the reservoir? • Feasibility of setting up temporary RV parks, mobile home parks, or other temporary housing • Some community members expressed the desire for zero change and do not have a desire for the opportunities presented • Expressed desires for the existing housing shortages to be addressed

COMMUNITY WORKSHOP #2

Community Meeting #2
Maxwell, CA





Wednesday, July 24th,2024

Activity #1: Visioning Board

De Novo Planning Group hosted an informational community workshop, along with Colusa County, on July 24th, 2024 in Maxwell, CA. This meeting was intended to gather feedback and comments from residents of Colusa County regarding the Maxwell Community Plan and the Sites Reservoir Area Plan. Approximately 50 members of the public attended this meeting. The public was encouraged to provide feedback and comments on the project through a visioning board activity that displayed a map of the site, with space to attach post-it notecards with comments. Five vision boards received comments, with board four having two sets of comments (4A and 4B). This activity allowed members of the public to provide broad feedback on the project that can be considered by both De Novo Planning Group and Colusa County. The responses from this informational meeting were collected and are stated below, verbatim.

Community Feedback	
Map 1	**Map 2**
• Add stop signs on Oak St. at high school/ at Elm St. • Put grocery store where old blue grocery store was?	• Restore/preserve historic buildings • Improve water/sewer • A that looks like Winters, CA • A town center or "park" with restrooms • Improve the look of town driving in from I-5 & 99! It's an eyesore! • Things that are good happening now: Parks & Rec – expand on activities and need more funding support • Funding! For town pool • Useable sidewalks, gutters and roads • Good restaurants/ gas stations and businesses • Fix up run down & empty properties!!!

Map 3	**Map 4.A**

• Student employment
• Property hoarding
• Grocery options
• Old buildings restore = curb appeal
• Sports conditions upgrade
• Parks
	• Keep small town vibe with moderate growth with housing and services
	• Vacant lots occupied
	• Upgrade utilities & infrastructure
	  ○ Roads + sidewalks
	• Farming stays protected
	• Need grocery services
	  ○ Restaurants
	  ○ Laundromat
	  ○ Barber shop
	  ○ Auto parts
	  ○ Hair stylists
	• Need permanent chain-brand businesses to stay + invest
	  ○ Grocery outlet
	  ○ Fast food
	  ○ Auto parts chains

Map 4.B	**Map 5**

• Vision –
  ○ Moderate planned growth
  ○ Grocery store
  ○ AG related businesses (i.e. tires, tractor repairs)
  ○ Increased job opportunities
  ○ School support for potential increase in students
  ○ Housing potential
  ○ Develop city park to improve aesthetics + restroom facilities
	• Traffic speeds – enforced – cameras?
	• Sidewalks redone
	• Refreshing buildings in downtown (historical story)
	• Sewer/water infrastructure
	• Full time police department + ambulance – more department resources
	• Crossings for children
	• Community center with AC
	• Internet access
	• Grocery store
	• Beautification + lighting (street)

Sites Reservoir Area Map and Maxwell Community Plan Project Site

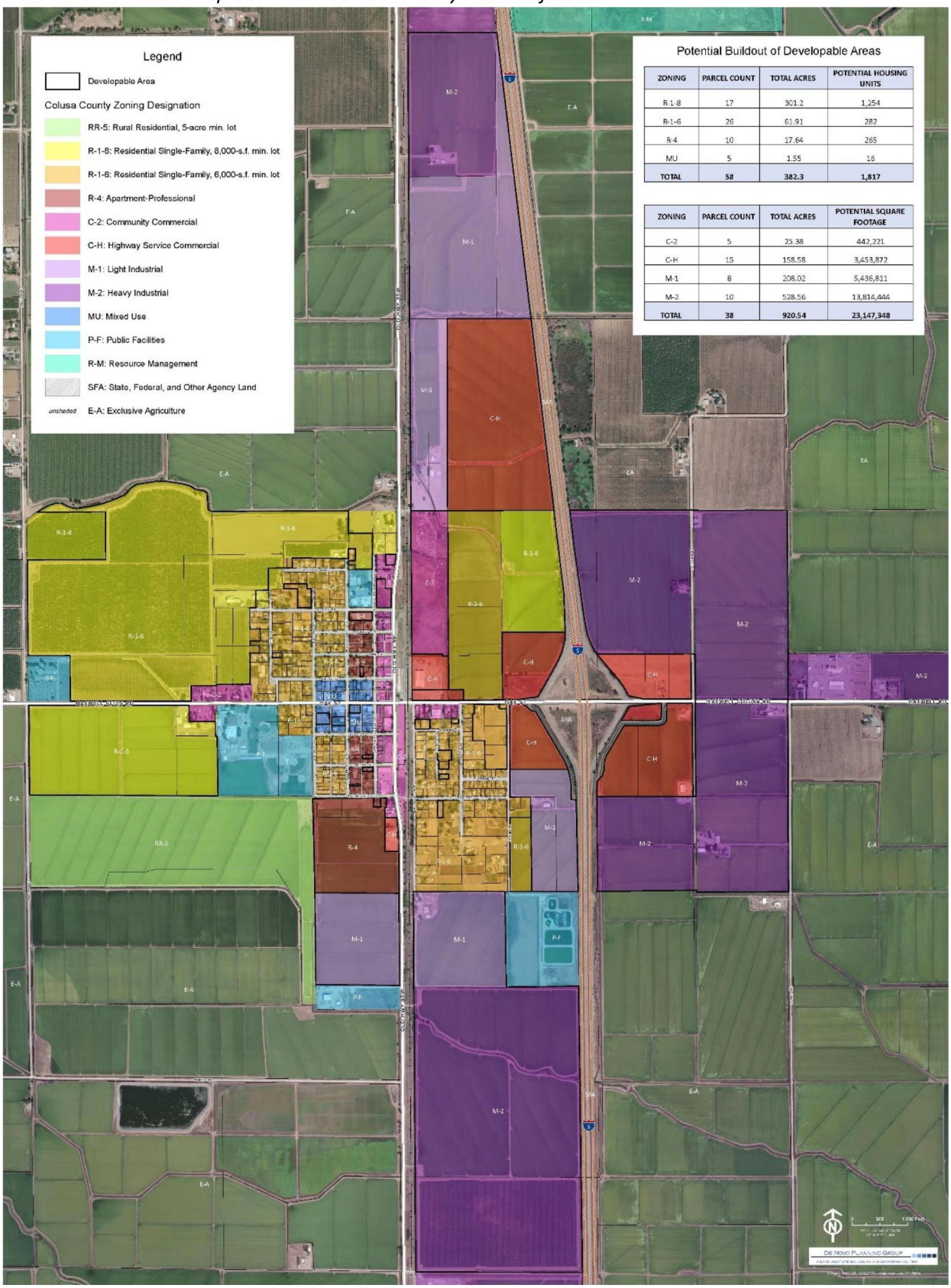

Vision Board #1



Vision Board #2

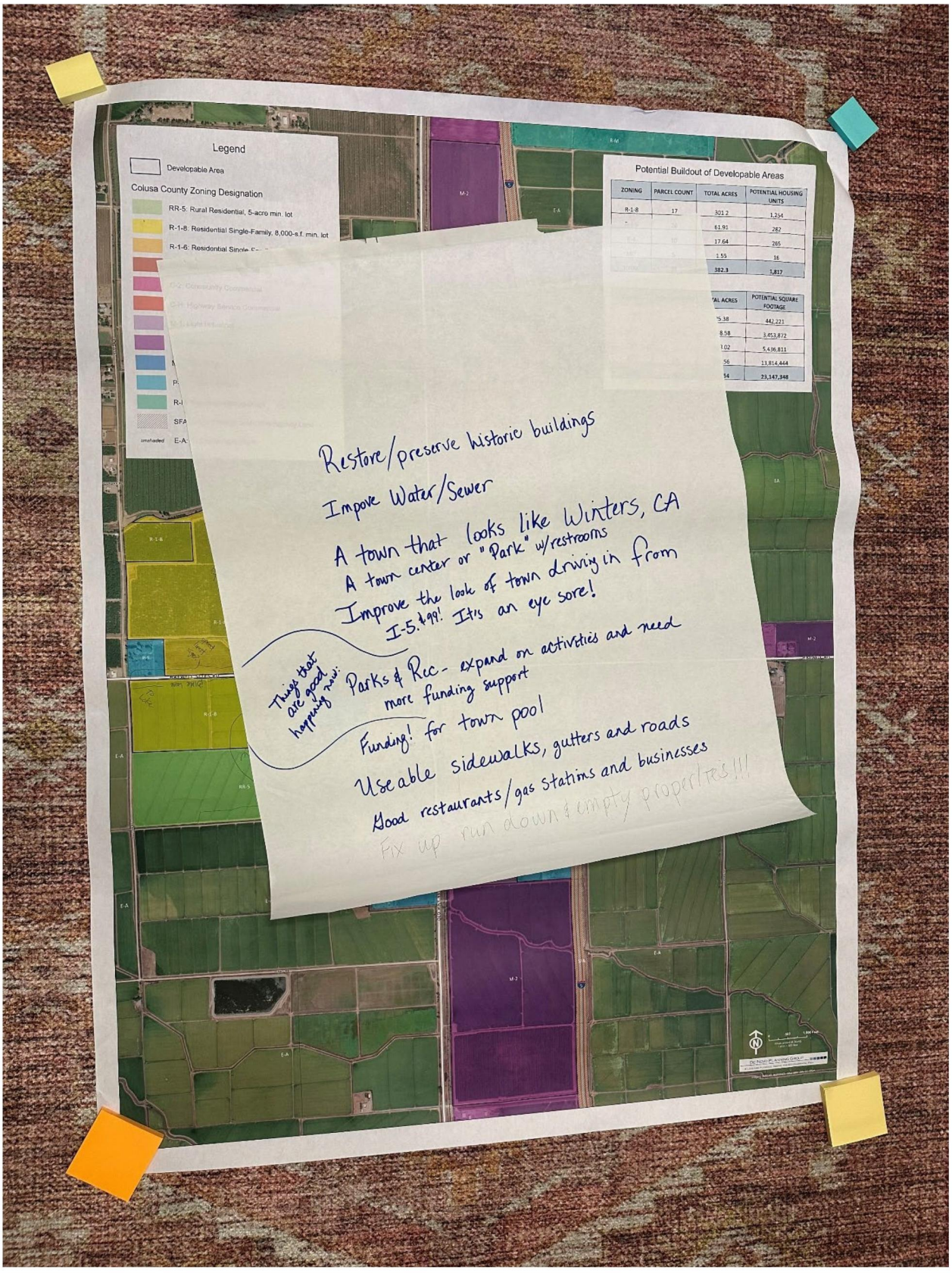

Vision Board #3

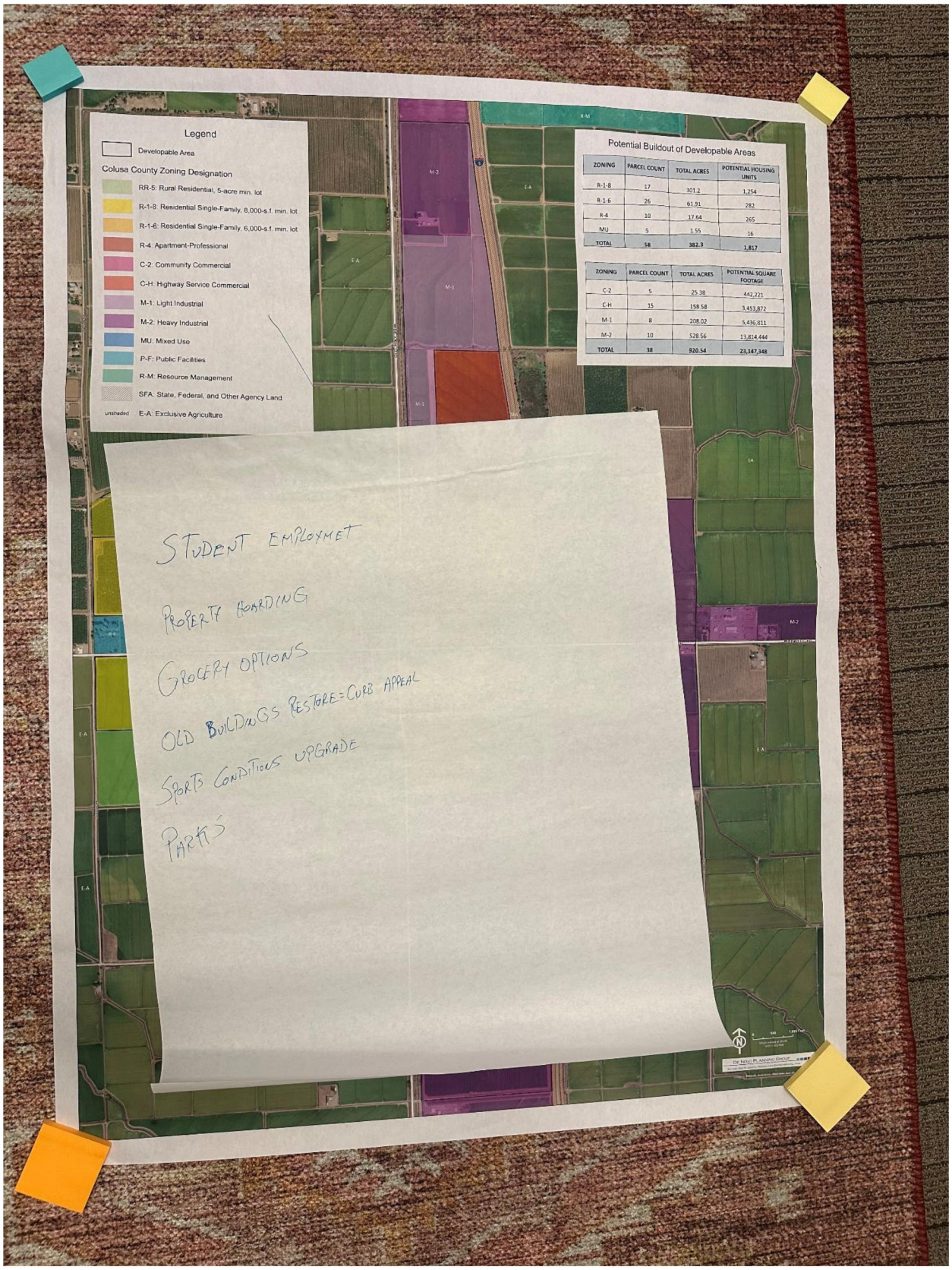

Vision Board #4A

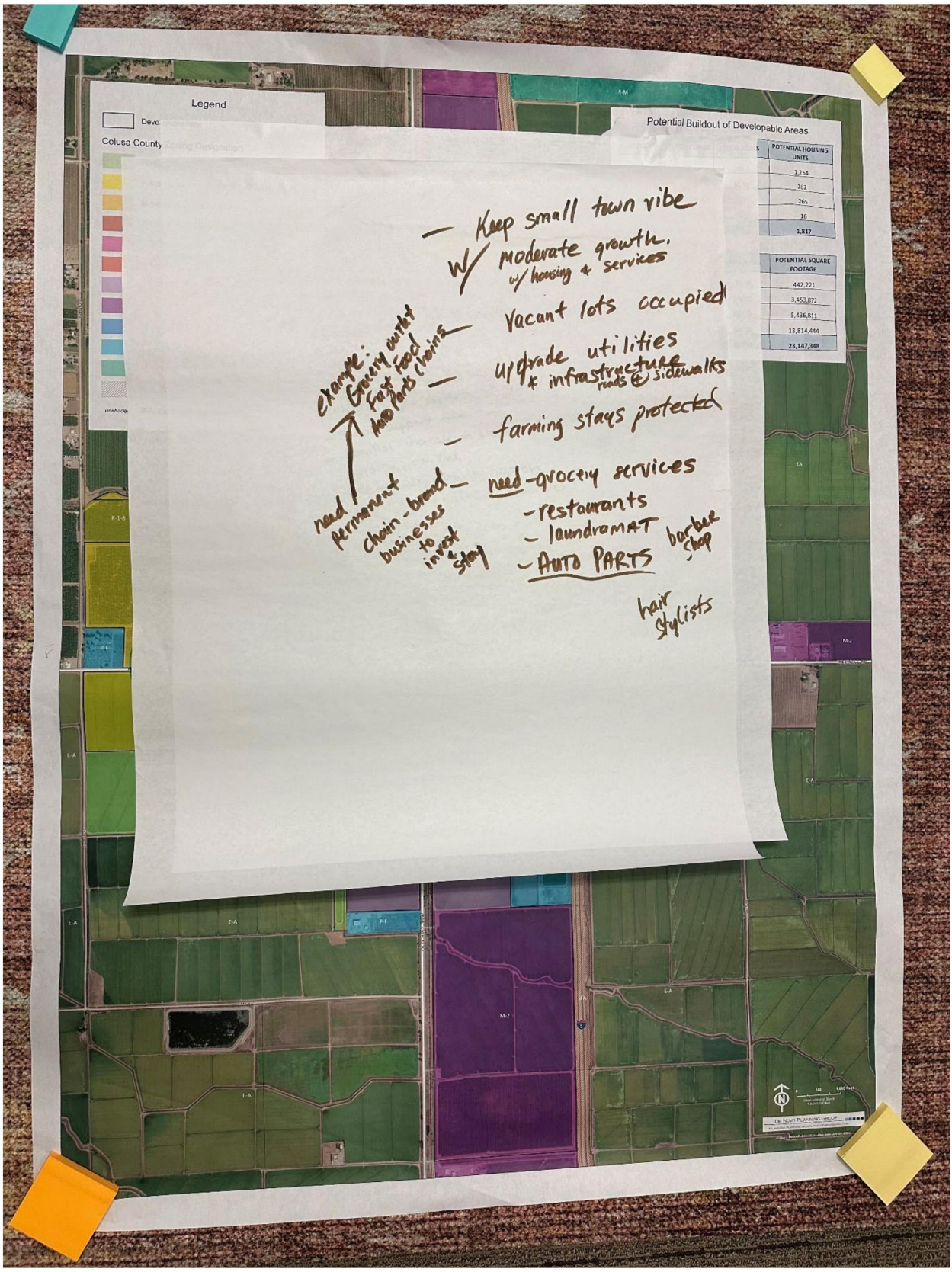

Vision Board #4B

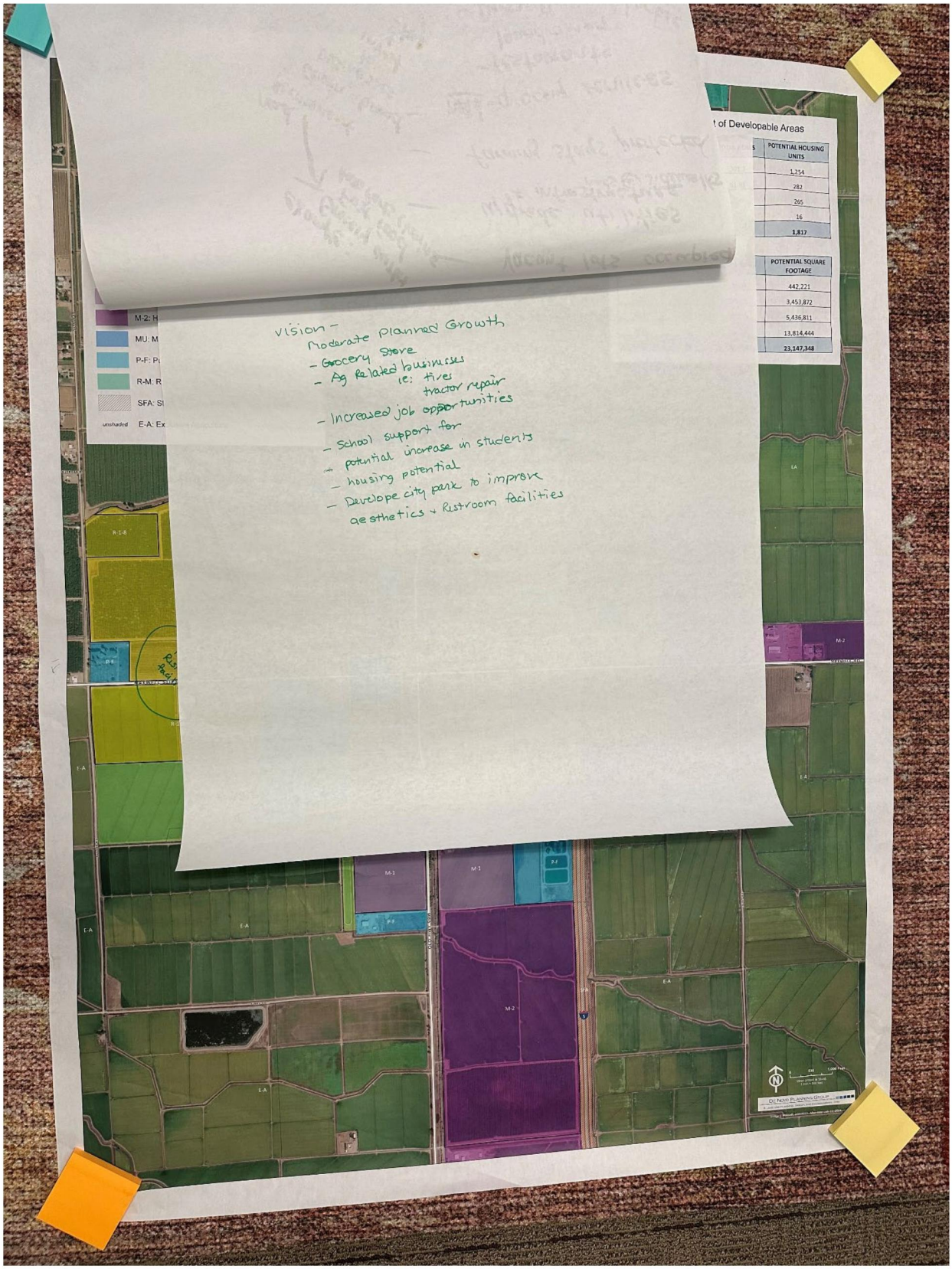

Vision Board #5

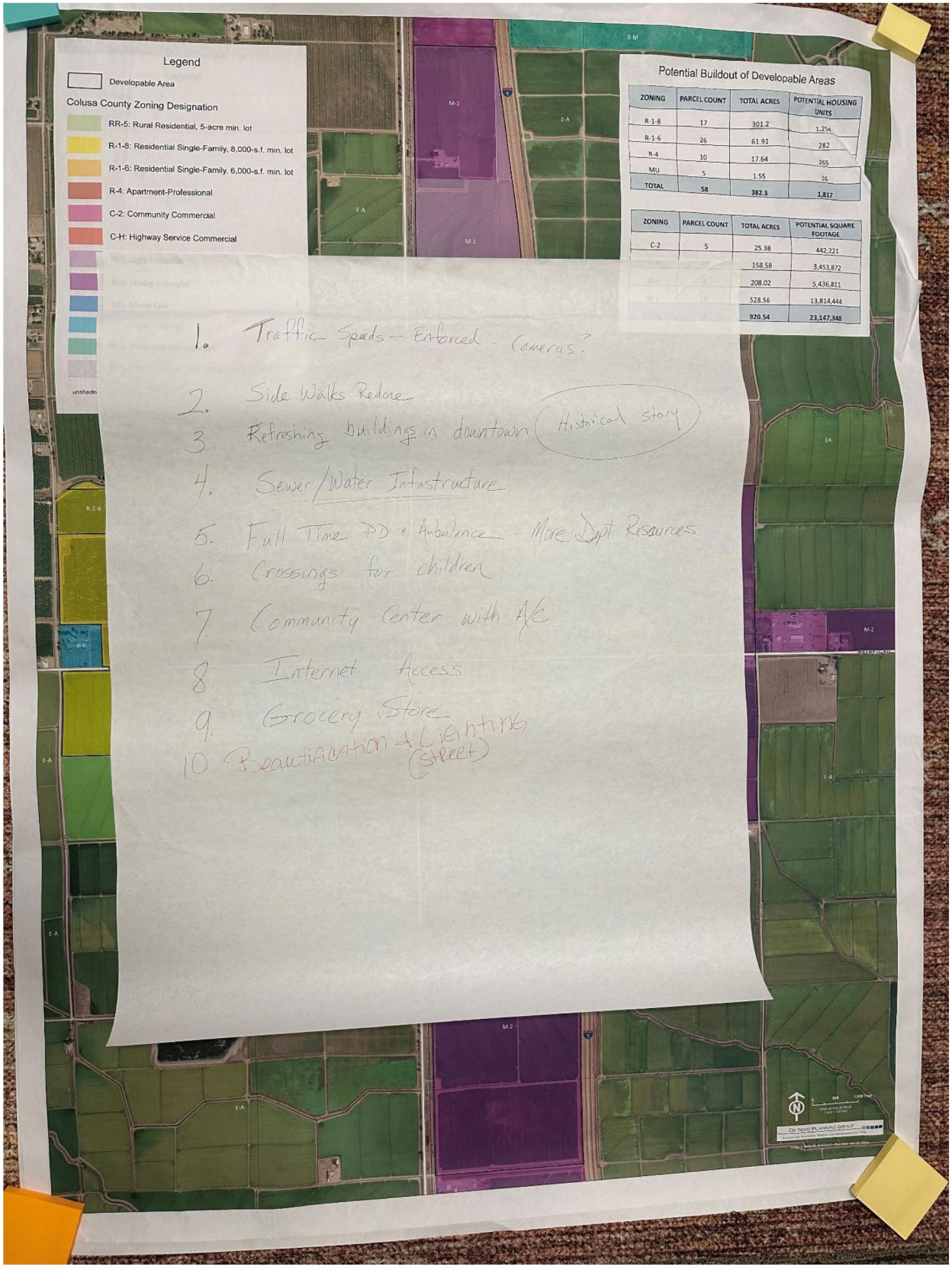

Activity #2: Post-it Note Activity

De Novo Planning Group hosted an information community workshop, along with Colusa County, on July 24th, 2024 in Maxwell, CA. This meeting was intended to garner feedback and comments from residents of Colusa County regarding the Maxwell Community Plan and the Sites Reservoir Area Plan. The public was encouraged to provide feedback and comments on the project through a post-it note activity. The display boards for this activity were divided into four categories: Challenges (Near-Term), Challenges (Long-Term), Opportunities (Near-Term), and Opportunities (Long-Term). This allowed members of the public to provide specific feedback on the project's near- and long-term opportunities and challenges that can be considered by both De Novo Planning Group and Colusa County.

The responses from participants show numerous trends in what members of the public view as opportunities and challenges that will come from this project. Many members of the public responded that temporary housing for construction workers will be necessary, and potentially will cause additional strain on an already limited housing stock in the area. Water quality and sewer capacity were also common issues raised with many respondents stating that expansions and updates of water infrastructure will need to occur. Other members of the public stated that traffic issues may arise as construction of these projects occurs. Often in conjunction with traffic concerns, were concerns about safety for residents, specifically near schools.

Regarding opportunities, trends about economic development, increased housing stock, employment opportunities, and community beautification were common among respondents. Many members of the public stated a desire for increased economic diversity that could expand the number and type of businesses in the area. Others stated that these projects would bring opportunities for employment during the construction cycle, as well as after. The necessity of temporary housing stock brought comments about the desire to increase the overall housing stock in the area, as many felt that there is a lack of housing already. Some respondents saw these projects as an opportunity to improve parts of the community, namely the utility infrastructure for water and sewer lines, as well as expanding open space and public parks throughout the area. The broad desire for city beautification was expressed for both near- and long-term opportunities for these projects.

The responses from this informational meeting were collected and are stated below, verbatim.

Community Feedback

Challenges (Near-Term)

- I have a 1 acre parcel with a home built in the 1950s. it is zoned commercial. I would like to be able to put an ADU for additional income but it would have to be rezoned.
- Time – 2 years is not enough to complete many projects
- Lodging for workers
- Storage
- Fuel – diesel
- Emergency services
- Rest stop
- Utilities – housing – traffic
- No capacity – no housing – public service
- Impact on schools – businesses may not keep pace with demand – law enforcement
- Housing (not enough) – poor infrastructure – no money to improve existing services and buildings or add new services – public services
- Police protection – fire protection – grocery store – medicine – rest stop – road improvements
- Housing near
- Stop signs need to be installed on Oak St.
- Housing – traffic
- Stop signs/controlled intersections throughout the whole town
- Potential for additional school students – schools may need to be expanded
- Sewer upgrade – water needs – housing for workers
- Water/sewer isn't capable to handle what we have now
- Limited housing accommodations – limited resources for influx population – environmental damages & financial burden
- Housing
- Preserving/restoring original Maxwell Building
- Housing shortage exists now, even without 1000+ worker influx
- Foot/bike traffic paths & street lighting
- Upgrade septic – water quality filter system +pressure – zonings
- Housing – traffic – grocery stores
- Traffic – accommodations/housing – services
- Revenue – jobs – growth – housing shortages – traffic – school overcrowding
- Traffic control – influx of workers & housing shortages – lack of infrastructure
    - Stores
    - Eating joints
- Housing – support infrastructure
- Construction traffic – temporary housing – water use?
- Traffic (trucks and workers) – supplies (groceries – fuel) – water/sewer – police – fire – improvements support
- Traffic control – traffic flow – available housing – water quality
- Traffic – current road conditions – current infrastructure



Challenges (Long-Term)

- Emergency services
- Rest stop – not burden on stores
- Housing – medical
- Opportunity for new businesses in the community
  - Restaurants
  - Hardware
  - Groceries
  - Etc.
- Upgrading school facilities (football, soccer, baseball) – no community park/gathering area – lack of basic storefront options (grocery, mechanic, food)
- Jobs leaving area – keeping area vibrant
- Fuel service
  - Diesel
- After workers leave is housing is vacant, what types of people come? Look at Oroville
- Upgrade septic system + water system, needs to be expanded
- Growth – schools – businesses
- Social dynamic changes – excess infrastructure – unemployment
- Fix roads after the project is complete
- Schools (larger) – housing – stores (food, gas, fuel) – traffic control – Maxwell City Government
- Strong sales for businesses & services + sales tax for county – enhanced community services; public safety for the town of Maxwell – create seasonal tourist area for continued revenue
- Financing = property taxes – schooling + transportation – water
- Increase of crime
- Invasion of private communities – flooding if anything happens – increase in expenses
- Infrastructure
  - Roads
  - Water
  - Sewage

  - Retail stores?
  - Schools
- Infrastructure – roadways/sidewalks – planning housing
- Housing – traffic – businesses + services
- New housing construction – crime – more business – restaurants – gas
- Permanent housing – lack of stores/hotels – infrastructure (roads, pipes, power)
- Stores + service
- Population after dam built? Continued funding sources for the town if maintained – traffic control
- Commerce – improve aesthetics
- Improve city beautification
- Safety (fire + law enforcement) – sewer capacity – housing
- Police/safety – road maintenance



Opportunities (Near-Term)

- First, new HVAC for this hall (and PA system). Second, new sewer lines
- Remodel 64 Oak Street as a visitor's center and basketball court for the kids
- First, a full time police dept. and ambulance service
- Short-term housing – supply (support food, fuel, internet)
- Jobs – restoration of businesses and services – investments & improvements in infrastructure
- More growth towards economy contribution of the county/city – employment opportunities – benefits from the government for initiating this project
- More commerce, food, stores
- Town services improved
- Local business sales support – tax increase
- Housing – temporary trailer parks to accommodate construction workers
- Make money (business & services make money) – employment for members of community
- Grow stores/restaurants – town park/facility stop – town beautification

- Income potential – develop housing
- Ability to build new projects on lots that need different zone
- Economic boost to town – grow resource availability in town
- Economic growth – increased tourism – public infrastructure improvements
- Businesses – improve infrastructure – beautiful town – community park
- Oak St. traffic control
    - New road
    - Roundabouts?
- Street lights
- Construction jobs – publicity – funds for Maxwell Parks and Rec
- Housing – water – increase traffic
- Water/sewer
- Grant writers
- Housing & local stores & services



Opportunities (long-Term)

- Housing opps. – revenue
- Increased ADA for schools (more $$$) – businesses that stay open after construction
- Parks, playground – more businesses
- Expansion of tourism economy – larger residential population – long awaited utility updates
- More jobs in county – more resources in Maxwell – more commuter resources
- Diversity in the community – growth of city – tourist attraction and increasing Maxwell city name
- Too many houses built remaining empty – infrastructure (roads, water, sewer, community services from county) – all are limited needs improvement
- Beautification of town – bike path – park
- Sheriff substation – more deputies in town – traffic lights – sewer
- Develop recreation – supply support services for recreation – develop support services for the committee housing for support personnel
- Recreational support services – storage space for boats and services
- Town services updated (water/sewer) – town beautification/town center/park
- Update old stores – have people be able to open new stores
- Grocery store – small sports complex for kids pool, baseball field, gym – sheriff substation
- Improve commerce – benefit from improved infrastructure + parks
- Rebuild/renew Main Street + sidewalks
- Financial growth/job opportunities – fast food (high school kid employment)
- Reservoir jobs – more public services – rezoning/more housing
- Business opportunities for seasonal use of reservoir
- To improve water in community – better streets – grocery stores – improve streets + roads



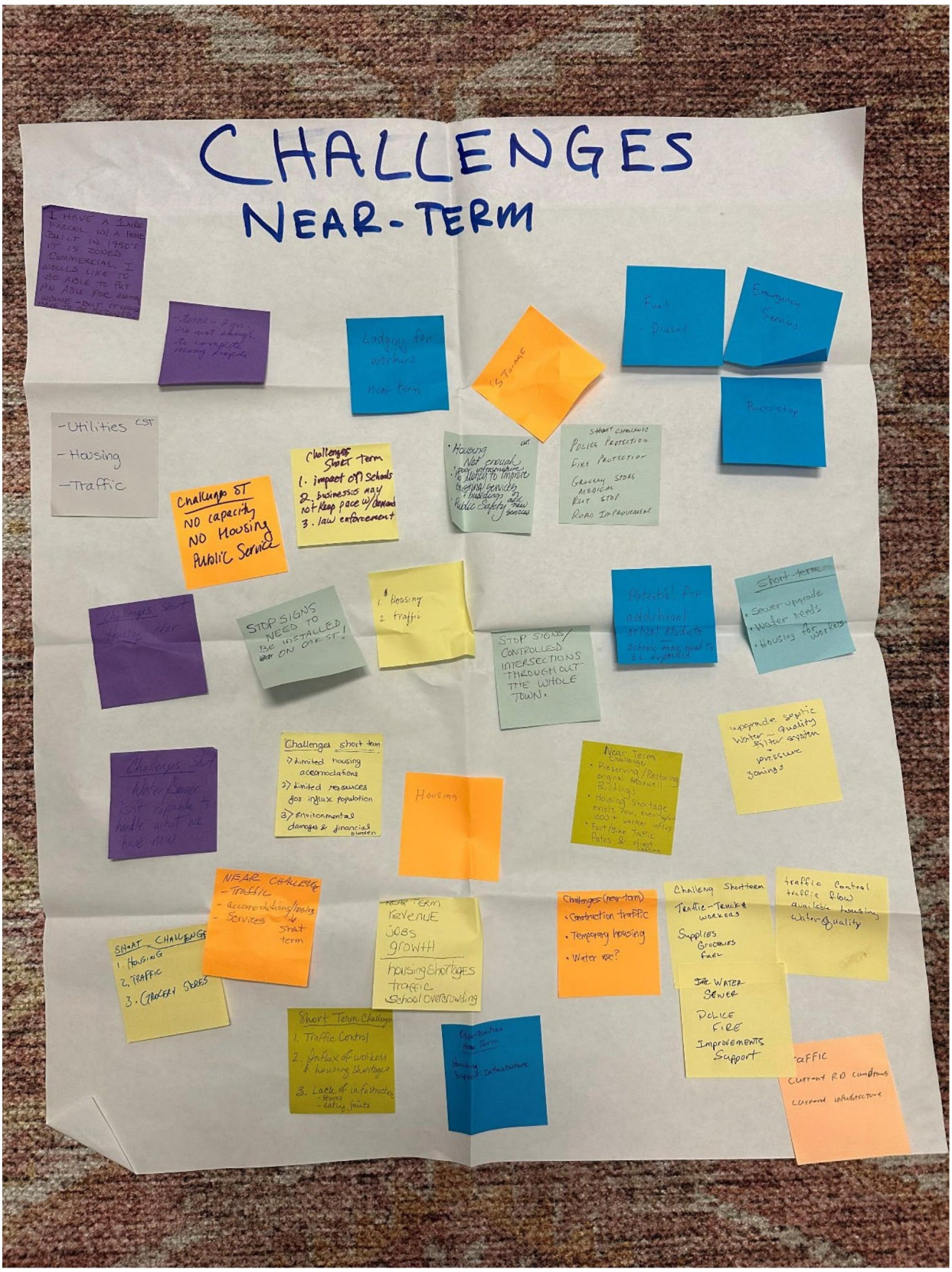
CHALLENGES
NEAR-TERM
I HAVE A LARGE PARCEL W/ A HOME BUILT IN 1950'S IT IS ZONED COMMERCIAL. I WOULD LIKE TO BE ABLE TO PUT AN ADU FOR AGING
Lodging for workers
Near Term
Full
Paved
Emergency Services
Rest Stop
-Utilities CST
-Housing
-Traffic
Challenges ST
NO capacity
NO Housing
Public Service
Challenges Short Term
1. impact on Schools
2. businesses may not keep pace w/ demand
3. law enforcement
Housing
Not enough
Public Safety
POLICE PROTECTION
FIRE PROTECTION
GROCERY STORES
MEDICAL
REST STOP
ROAD IMPROVEMENT
STOP SIGNS NEED TO BE INSTALLED ON OAK ST.
Housing
traffic
STOP SIGNS/ CONTROLLED INTERSECTIONS THROUGHOUT THE WHOLE TOWN.
Potential for additional school students
Short term
Sewer upgrade
Water Needs
Housing for workers
Challenges short term
limited housing accomodations
limited resources for influx population
environmental damages & financials
Housing
Near Term Challenges
Preserving/Restoring original historic Buildings
Housing Shortage exists now, eventually
Fast/slow Traffic
upgrade septic
Water Quality
Water system
pressure
zonings
NEAR CHALLENGE
- TRAFFIC
- Accomodations/Housing
- Services
Short term
NEAR TERM
REVENUE
JOBS
GROWTH
housing Shortages
Traffic
School overcrowding
SHORT CHALLENGE
1. Housing
2. TRAFFIC
3. GROCERY STORES
Challenges (near-term)
Construction traffic
Temporary housing
Water use?
Challenges Short term
Traffic - Tenkey workers
Supplies
Groceries
Fuel
traffic Control
traffic flow
available housing
Water Quality
Sewer
POLICE
FIRE
Improvements
Support
Short Term Challenges
1. Traffic Control
2. influx of workers & housing shortages
3. Lack of infrastructure
- Streets
- aging joints
Opportunities
Near Term
Improving
Current Infrastructure
TRAFFIC
Current RD conditions
Current infrastructure

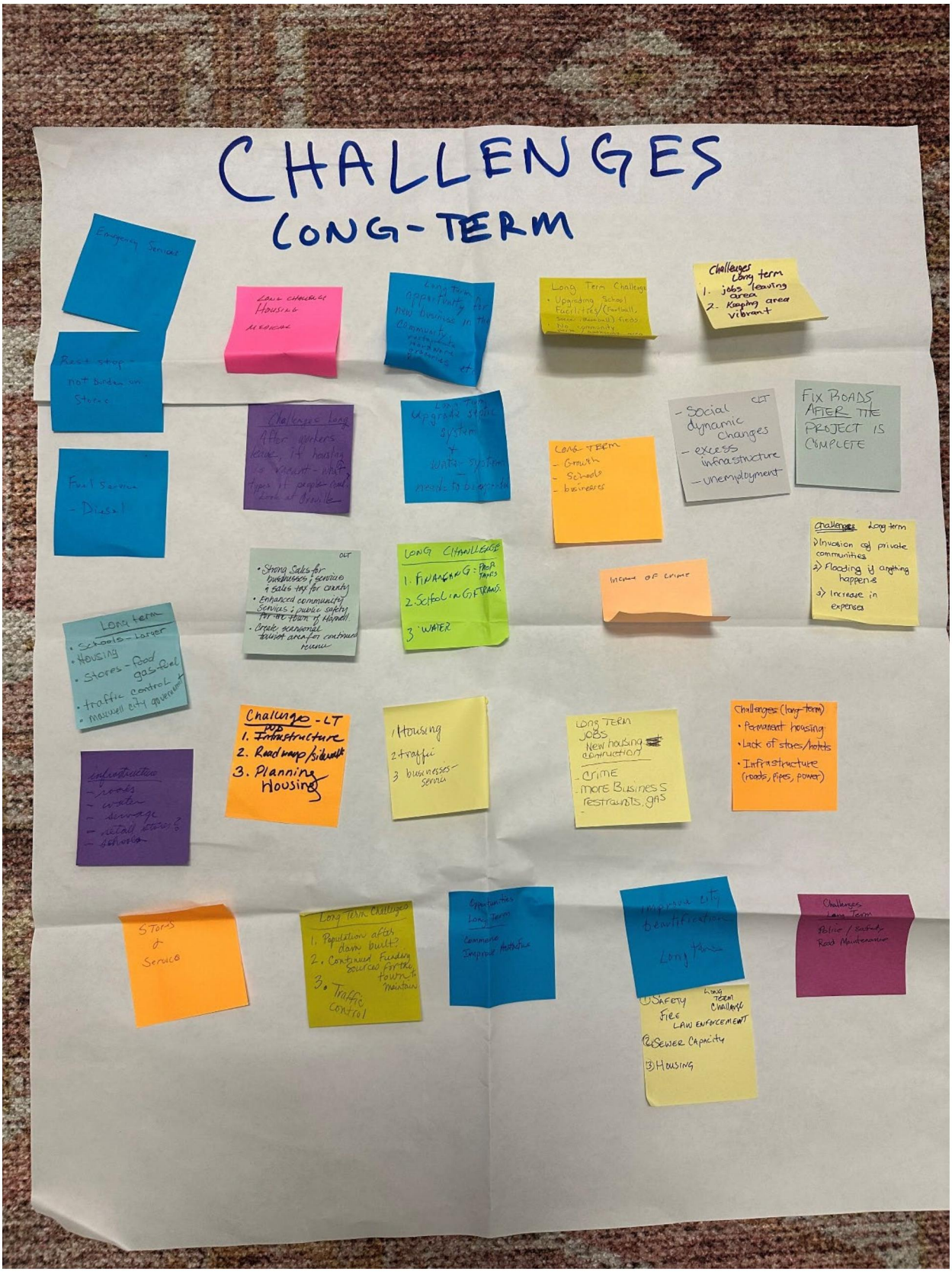
CHALLENGES
LONG-TERM
Emergency Services
Rest stop - not burden on Stores
Fuel Service - Diesel
Long Term Challenge
Challenges Long term
1. jobs leaving area
2. Keeping area vibrant
Challenges Long
Long Term
- Growth
- Schools
- businesses
- Social dynamic changes
- excess infrastructure
- unemployment
FIX ROADS AFTER THE PROJECT IS COMPLETE
Challenges Long term
1) Invasion of private communities
2) Flooding if anything happens
3) Increase in expenses
LONG CHALLENGE
1. FINANCING - PROP TAXES
2. SCHOOLING & TRANS.
3. WATER
Long term
• Schools - Larger
• Housing
• Stores - food gas fuel
• traffic control
• maxwell city government
Challenges - LT
1. Infrastructure
2. Roadwaup/sidewalk
3. Planning Housing
1 Housing
2 traffic
3 businesses - service
LONG TERM
JOBS
New housing construction
- crime
- more Business restraints, gas
Challenges (long-term)
• Permanent housing
• Lack of stores/hotels
• Infrastructure (roads, pipes, power)
infrastructure
- roads
- water
- sewage
- retail stores?
- schools
Stores & Service
Long Term Challenges
1. Population after dam built?
2. Continued Funding sources for the town to maintain
3. Traffic control
Opportunities Long Term
Commerce
Improve Aesthetics
Improve city beautification
Long term
Challenges Long Term
Police / Safety
Road Maintenance
1) Safety Fire Law Enforcement
Long Term Challenge
2) Sewer Capacity
3) Housing

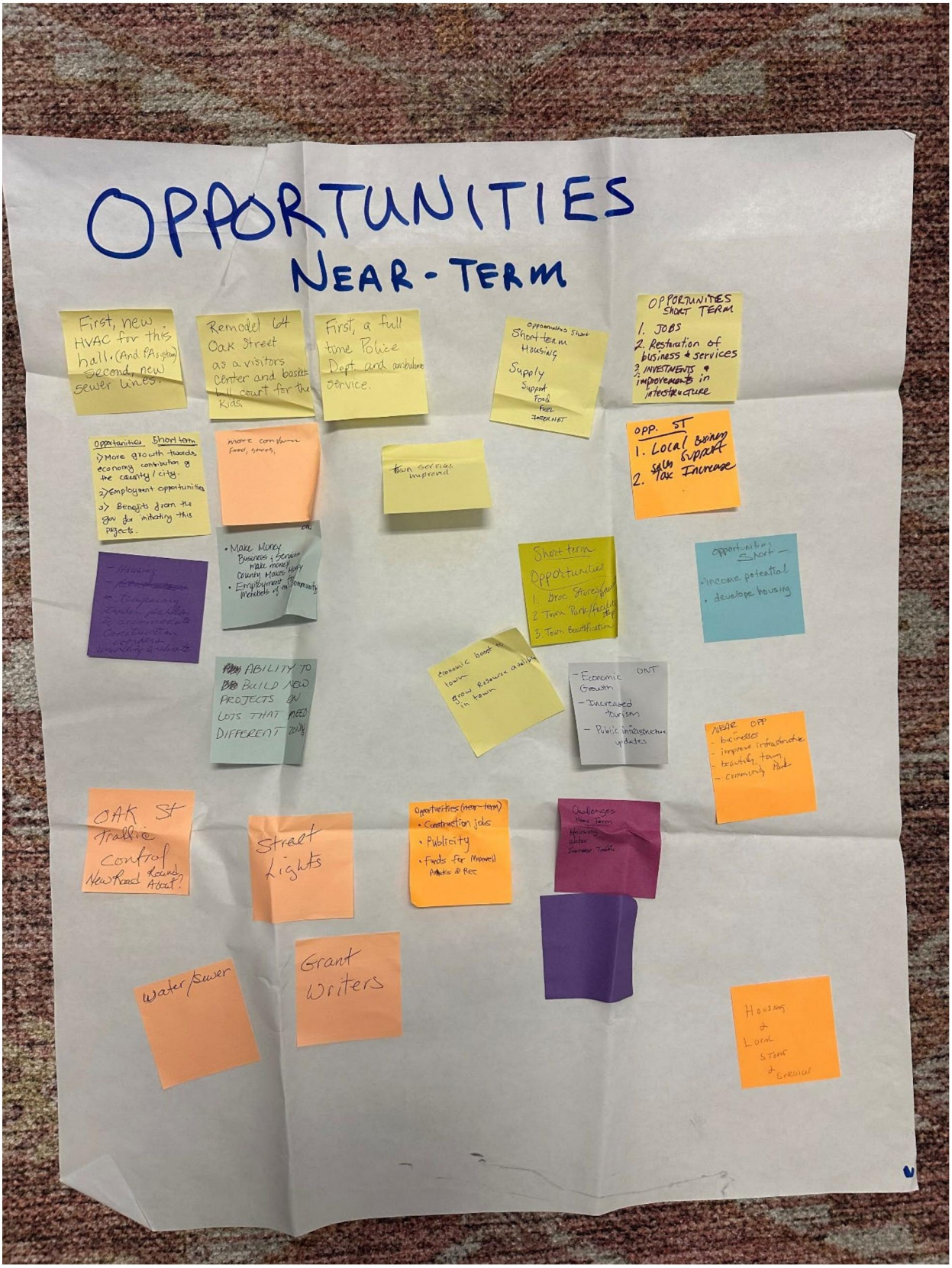
OPPORTUNITIES
NEAR-TERM
First, new HVAC for this hall. (And PA system) Second, new sewer lines.
Remodel 64 Oak Street as a visitors center and basket ball court for the kids.
First, a full time Police Dept. and ambulance service.
Short term Housing
Supply
Support
Food
Fuel
INTERNET
OPPORTUNITIES SHORT TERM
1. JOBS
2. Restoration of business & services
3. INVESTMENTS & improvements in interstructure
Opportunities Short term
1) More growth towards economy contribution of the county / city.
2) Employment opportunities
3) Benefits from the gov for initiating this projects.
more commun food, stores,
town services improved
OPP. ST
1. Local Business Support
2. Sales Tax Increase
• Make Money Business & Services make money County Makes Money
• Employment for Members of the community
Short term Opportunities
1. Grocery Stores
2. Town Park/facility stop
3. Town Beautification
opportunities Short —
• income potential
• develope housing
ABILITY TO BUILD NEW PROJECTS ON LOTS THAT NEED DIFFERENT ZONING
economic boost to town
grow Resource available in town
- Economic Growth ONT
- Increased tourism
- Public infrastructure updates
NEAR OPP
- businesses
- improve infrastructure
- beautify town
- community Park
OAK St Traffic Control New Road Round About?
Street Lights
Opportunities (near-term)
• Construction jobs
• Publicity
• Funds for Maxwell Patrick & Rec
Challenges
Near Term
Housing
Water
Increase Traffic
Grant Writers
water/sewer
Housing & Local Store & Services

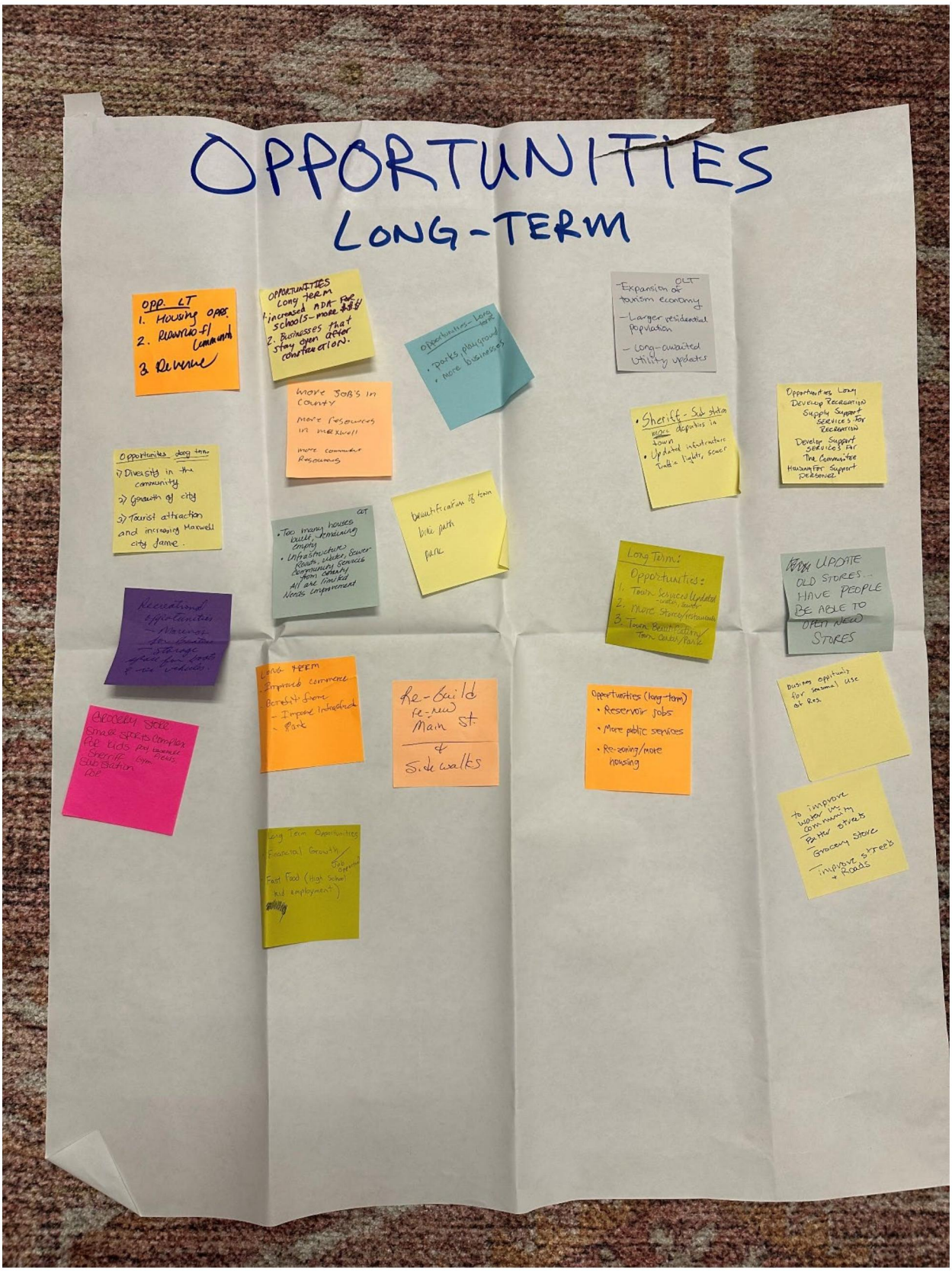
OPPORTUNITIES
LONG-TERM
OPP. LT
1. Housing opps.
2. Revenue f/ Community
3. Revenue
OPPORTUNITIES Long term
1. increased ADA for schools - more $$$
2. Businesses that stay open after construction.
Opportunities - Long term
• parks, playground
• more businesses
OLT
- Expansion of tourism economy
- Larger residential population
- Long-awaited utility updates
more Job's in County
more resources in maxwell
more commuter Resources
• Sheriff - Sub station
more deputies in town
• Updated infrastructure
Traffic lights, sewer
Opportunities Long
Develop Recreation
Supply Support Services for Recreation
Develop Support Services for The Committee
Housing for Support Personnel
Opportunities long term
1) Diversity in the community
2) Growth of city
3) Tourist attraction and increasing Maxwell city game.
OLT
• Too many houses built, remaining empty
• Infrastructure
Roads, water, sewer
Community services from county
All are limited
Needs improvement
beautification of town
bike path
park
Long Term:
Opportunities:
1. Town Services Updated
2. More Stores/restaurants
3. Town Beautification/ Town Center/Park
UPDATE OLD STORES... HAVE PEOPLE BE ABLE TO OPEN NEW STORES
Recreational opportunities
- Marinas
- Storage
Long term
Improved commerce
Benefit from
- Impose infrastructure
- Park
Re-build
re-new
Main St.
&
Sidewalks
Opportunities (long-term)
• Reservoir jobs
• More public services
• Re-zoning/more housing
Business opportunity for seasonal use of Res.
Grocery store
Small sports complex for kids pool, baseball fields, Sheriff gym, Sub station for
Long Term Opportunities
Financial Growth
Job Opportunities
Fast Food (High School kid employment)
to improve water in community
Better streets
Grocery store
Improve streets + Roads

Appendix B: General Plan Policies

Policy LU 1-10: Concentrate future development within or adjacent to the communities that provide urban services, including Arbuckle, College City, Colusa, Grimes, Maxwell, Princeton, Stonyford, and Williams, with an emphasis on placing large-scale and more intense development projects in these population centers as opposed to other rural and remote areas that lack public services and amenities or are not connected to an exiting community.

Policy LU 1-15: To conserve open space and agricultural lands outside of planned urban areas and provide the efficient use of public services, make land use decisions that reinforce the cultural and economic viability of unincorporated community centers of the County, including Arbuckle, College City, Grimes, Maxwell, Princeton, and Stonyford.

Policy LU 3-17: Ensure that zoning and land use designations at the Interstate 5 freeway interchanges at Arbuckle, Maxwell, and the unincorporated area near Williams are used for highway-oriented commercial use. These uses, which include hotels, restaurants, and service stations, should be oriented to interstate travelers, tourists, and visitors to the County's various open space recreation and agricultural opportunities. Development at these interchanges should be planned to minimize traffic and safety hazards on local streets and regional transportation facilities to the extent feasible.

> ***Action LU 3-C:*** *Revise the Zoning Ordinance to include updated design standards that promote attractive development for commercial, industrial, office, institutional, and multiple family development; include design recommendations that encourage "green" design construction; and address the following provisions:*
>
> 1. *Site planning sensitive to the natural environment and that addresses creating functional and attractive places.*
> 2. *Building rehabilitation and modification to improve existing structures.*
> 3. *Low environmental impact materials and products, including recycled and local materials, and recycling of construction waste.*
> 4. *Passive and active solar elements and use of efficient heating and cooling systems.*
> 5. *Standards for building design and appropriate use of materials to provide high-quality development, including requiring buildings to be sited toward the street, except for approved plazas, seating areas, and entry nooks; off-street parking, if any, located to the rear of the building or lot; architecture that incorporates a pedestrian scale with varied articulated facades, windows and building features; and community design features, such as landscaping, entry features, fountains, plazas, pedestrian furniture and similar features.*
> 6. *Landscaping and design elements to screen unsightly elements from public and neighboring views.*
> 7. *Standards for adequate off-street parking and alternatives to on-site parking in downtown and historic areas.*
> 8. *Standards for exterior lighting, signage, and trash/recycling containment facilities.*
> 9. *Gateway concepts for entryway treatment for Arbuckle, Maxwell, Princeton, Grimes, and Stonyford.*

Action CC 1-C: *prepare and implement general countywide design guidelines and minimum design requirement (standards) for new residential and commercial development as described in Action LU 3-C. The design guidelines should include more specific and detailed standards for new development in the communities of Arbuckle and Maxwell. The design guidelines should provide for attractive growth that respects the cultural heritage and character of each community and should be developed with input from each community.*

Maxwell

Policy CC 2-35: Support the downtown area as the central hub of the community.

Policy CC 2-36: Encourage and facilitate the rehabilitation and beautification of historical properties in the downtown area.

Policy CC 2-37: Encourage the development of vacant parcels in the downtown area with resident- and visitor-serving commercial, retail, and service, uses.

Policy CC 2-38: Recognize and expand Maxwell's role as a "gateway" to numerous recreational opportunities in western Colusa County.

Policy CC 2-39: Require new development in Maxwell to include design and aesthetic characteristics that complement and enhance the existing community. Design features may include components that reflect the small-town, rural, historic and agrarian character of Maxwell in an attractive manner.

Policy CC 2-40: Encourage new and expanded industrial operations to locate along the Interstate 5 corridor north and south of Maxwell.

Policy CC 2-41: Support the establishment of highway commercial land uses near existing Interstate 5 interchanges in Maxwell.

Policy CC 2-42: Require new urban development in Maxwell to connect to the municipal water and wastewater systems.

Policy CC 2-43: Explore the feasibility of establishing a service district for the beautification or revitalization of Maxwell. Volunteer or community fund-raising efforts to beautify the community should be supported.

Policy CC 2-44: Encourage new development proposals to include a balanced mix of jobs and housing.

Policy CC 2-45: Increase pedestrian and bicycle connectivity between residential areas and the downtown area.

Policy CC 2-46: Vacant and underdeveloped lands within the Maxwell Public Utility District Service Area should be developed before additional undeveloped lands are annexed into the PUD's Service Area.

Action CC 2-E: *Assist residents and businesses in Maxwell in establishing a service district for the beautification and revitalization of Maxwell, if such a district is feasible. Provide County*

support through efforts to create a district and assist with securing State or Federal funds for improving the buildings, streetscapes, and public areas within the community.

Action CC 2-F: *Assist the Maxwell Parks and Recreation District in updating their development impact fees to provide additional funding for the expansion of parks facilities in Maxwell.*

Action CC 2-G: *If the Sites Reservoir project is approved, develop a Maxwell Community Plan to capitalize on economic development opportunities, including lodging, shopping, dining, and other tourism uses, created by increased visitors and County residents using Sites Reservoir. The Maxwell Community Plan shall emphasize aesthetic and design standards that recognize the historic character of Maxwell and importance of the area as the gateway to recreation opportunities in the western County.*

Chapter 6. Economic Development Element

Action ED 2-A: *Apply for Community Development Block Grant/Technical Assistance and Economic Development Allocation funds and coordinate the preparation of a business incentive program, sign program, and development of marketing materials and a marketing strategy. Other programs should include preparation of economic development strategic and downtown revitalization plans for the communities of Arbuckle, Maxwell, Princeton, College City and Grimes.*

Action ED 2-C: *Assist businesses and interested parties in establishing Main Street Programs and business districts in established communities, particularly in Arbuckle and Maxwell.*

Responsible (R) - The agency or entity that performs the work required to complete a task, or has a role in implementation

Accountable (A) - The agency or entity that is ultimately answerable for the successful completion of a task. May also be the Resonsible Entity.

Consulted (C) - The agency or entity whose input is needed or desired before a decision or action is taken.

Informed (I) - The agency or entity that should be kept up-to-date on the progress or outcome of a task.

Maxwell Community Plan RACI Matrix for Implementation of Strategies

	Implementation Strategies	Colusa County	Sites Authority	Maxwell Unified School District	Maxwell Fire Protection District	Maxwell PUD	Sites Contractors	Maxwell Parks and Rec District	Notes
	Housing Strategies								
	H-1 *The County should consider amending the Zoning Code to provide for the ability of local landowners to establish temporary workforce housing utilizing recreational vehicles. The Zoning Code amendment should consider such factors as the permit process, appropriate locations and zoning districts, development standards, temporary utility provisions, the need for transit occupancy tax, and post construction restoration requirements.*	A	R	C	C	C	R	C	While the County is responsible and accountable for amending the Zoning Code, as applicable, the Sites Authority and Sites Contractors will also play a role in implementation.
	H-2 *The County should establish standards and provisions that ensure that any properties used for temporary workforce housing during the construction of Sites Reservoir are not permitted to provide ongoing temporary housing following reservoir construction. This provisions should include standards and requirements that ensure any trailers or other temporary housing units are removed, that the site is cleaned of all waste and housing remnants, and that any temporary support infrastructure such as fencing or restrooms are removed.*	A	R	C	C	C	R	I	While the County is responsible and accountable for amending the Zoning Code, as applicable, the Sites Authority and Sites Contractors will also play a role in implementation.
	H-3 *The County should consider amending the Zoning Code to allow residential properties that were re-zoned to commercial uses in the County's comprehensive 2014 Zoning Code update to construct accessory dwelling units (ADUs) under similar requirements as residential zoned properties.*	A	I	C	C	C	I	C	The County is responsible and accountable for amending the Zoning Code. ADUs are considered permanent housing, and while they could be used for workforce housing associated with the construction of the Sites Reservoir Project, that will not be the primary use.
	H-4 *The County should consider amending its Zoning Code to allow rental housing units to be established on commercial zoned property in the downtown Maxwell area, and potentially the downtown areas of the other unincorporated communities throughout the County of Colusa.*	A	I	C	C	C	I	C	The County is responsible and accountable for amending the Zoning Code. Rental housing units are permanent housing, and while they could be used for workforce housing associated with the construction of the Sites Reservoir Project, that will not be the primary use.
	H-5 *The County should consider amending its Light Industrial Zoning District to permit the establishment of Mobile Home and Special Occupancy Parks.*	A	I	C	C	C	I	C	The County is responsible and accountable for amending the Zoning Code. Mobile Home units are permanent housing, and while they could be used for workforce housing associated with the construction of the Sites Reservoir Project, that will not be the primary use.

	H-6 *The County should explore how to further streamline its ADU permit process which could include the development of a set of pre-approved building permit plans for ADU's.*	A	I	I	R	C	I	I	The County is responsible and accountable for amending the Zoning Code and for plan checking any ADU construction plans that will be included in a set of pre-approved building permit plans. All fire districts within the County, including the Maxwell Fire Protection District, will be responsible for reviewing the ADU construction plans for compliance with applicable fire codes.
	H-7 *The County should seek to stabilize and improve housing conditions in existing residences and neighborhoods in Maxwell by seeking state and/ or federal funding through CDBG, HOME, BEGIN, and/ or Cal HOME for housing rehabilitation and/ or home ownership activities on a regular basis.*	A	R	I	I	I	N/A	I	The County is responsible and accountable for seeking funding and applying for grant funds. The Sites Authority, in compliance with an approved Impact Alleviation Agreement or Development Agreement, shall be responsible for providing a funding commitment to the County to assist with the applicable associated administrative services.
	H-8 *The County should explore a range of tools and strategies to spur additional permanent housing development in Maxwell. Strategies may include, but are not limited to, streamlined development permitting, reducing permitting fees, assistance with infrastructure costs and extensions, and other strategies to reduce the cost of housing unit construction.*	A	N/A	I	C	C	N/A	I	The County is responsible and accountable for implementing any adopted strategies.
	H-9 *The County should encourage the Sites Authority to include provisions in their contracting requirements to encourage Site Reservoir construction firms to assist the local community in rehabilitating existing vacant or underutilized housing units to be used for both short-term and long-term permanent construction workforce housing.*	R	A	I	I	I	A	I	The County is responsible for encouraging the Sites Authority; the Sites Authority and the Sites Contractors are accountable for the inclusion of any applicable provisions in their contracting requirements.
	H-10 *The County should consider expanding code enforcement activities in Maxwell to identify dilapidated and sub-standard housing units, and connect owners with resources that provide financial assistance to improve the condition of their housing units.*	A	I	I	C	I	I	N/A	The County is responsible and accountable for code compliance enforcement in the community of Maxwell.
	Infrastructure Strategies								
	I-1 *The County should support ongoing efforts by the Maxwell PUD to help ensure sufficient municipal services and infrastructure to meet short- and long-term needs of the community. This may include, but is not limited to, proactively pursuing funding opportunities, including State and federal grants, fees, taxes and assessments, and other funding sources to: Replace antiquated concrete wastewater conveyance piping with modern PVC pipes; Expand water treatment capacity and/or secure new land to drill a new water well to replace Well #6; Extend water and sewer conveyance lines east of I-5.*	R	N/A	I	I	A	N/A	I	The County is responsible for supporting the efforts by the Maxwell PUD; the Maxwell PUD is responsible and accountable for ensuring sufficient municipal services and infrastructure are in place to meet short- and long-term community needs.
	I-2 *The County should require new urban development (commercial, residential, and industrial) to connect to municipal water and wastewater services provided by the Maxwell PUD, consistent with the requirements established in the General Plan. Exceptions may be granted for temporary or short-term workforce housing, provided that it can be demonstrated that adequate and water and wastewater services can be provided.*	A	N/A	N/A	I	R	N/A	N/A	The County is responsible and accountable for requiring new urban development to connect to municipal water and wastewater services; The Maxwell PUD is responsible for providing municipal water and wastewater services.
	Community Facilities Strategies								

	CF-1 *The County should support the Maxwell Park and Recreation District in constructing a gateway entry park west of I-5 along Maxwell Colusa Road or Old Highway 99. The gateway park should have distinct and well-designed signage, signaling to visitors that they have entered the community of Maxwell, and should include public restrooms and a pet relief area. The gateway park should also include features such as lawn areas, shade, and picnic tables.*	R	R	C	C	C	N/A	A	The County is responsible for supporting the Maxwell Park and Recreation District in constructing a gateway entry park; the Maxwell Park and Recreation District is responsible and accountable for ensuring a gateway entry park is constructed and maintained; the Sites Authority, in compliance with an approved Impact Alleviation Agreement or Development Agreement, shall be responsible for procuring and funding the design of the park consistent with the conceptual design described in the Maxwell Community Plan and in coordination with the design of the Sites Reservoir recreation facilities.
	CF-2 *The County should support the Maxwell Park and Recreation District as it seeks opportunities to expand parks and recreational facilities in the community through the acquisition of additional lands and the improvement and expansion of existing facilities.*	R	N/A	C	C	C	N/A	A	The County is responsible for supporting the Maxwell Park and Recreation District; the Maxwell Parks and Rec District is responsible and accountable for seeking and implementing any expansions to existing parks and recreational facilities.
	CF-3 *Support the Maxwell Unified School District in campus beautification efforts and maintenance of joint-use recreational facilities.*	R	N/A	A	I	I	N/A	R	The County is responsible for supporting the Maxwell Unified School District; the Maxwell Unified School District is responsible and accountable for any campus beautification efforts and maintenance of joint-use recreational facilities; and the Maxwell Parks and Recreation District is responsible for maintenance of joint-use recreational facilities.
	Community Safety Strategies								
	CS-1 *The County should prepare for an increased number of Sheriff's response calls during both the construction and operational phases of the Sites Reservoir project, and provide increased staffing levels and patrol frequency, as needed, to ensure community safety.*	A	R	C	C	I	R	C	The County is responsible and accountable for the Sheriff's response times; the Sites Authority, in compliance with an approved Impact Alleviation Agreement or Development Agreement, shall be responsible for making efforts to allevaite service demand increases related to construction and workforce road use, temporary workforce domestic issues, and recreation operations; Sites Contractors shall be responsible for holding their workforce accountable during the construction and operation of the Sites Reservoir project.
	CS-2 *The County should support the Maxwell Fire Protection District in their mission to provide excellent fire and EMS services to the community. Identify additional demand caused by increases in temporary worker populations and increased tourism and visitors following completion of Sites Reservoir.*	R	R	C	A	C	R	C	The County is responsible for supporting the Maxwell Fire Protection District in their mission; The Sites Authority, in compliance with an approved Impact Alleviation Agreement or Development Agreement, shall be responsible for making an effort to alleviate service demand increases related to construction, workforce and reservoir related tourisim; Sites Contractors are responsible for any increase in fire and EMS services associated with the construction and operation of the Sites Reservoir project; and the Maxwell Fire Protection District is responsible and accountable for providing excellent fire and EMS services to the community.

	CS-3 *In collaboration with the Maxwell Unified School District, seek to establish and implement a Safe Routes to School Program. The Program should identify key intersections and roadways in the vicinity of local schools that may require safety upgrades such as stop signs, crosswalks, sidewalks, etc. Improvements should be made prior to the start of the construction of Sites Reservoir.*	R	R	A	C	C	R	C	The County is responsible for collaborating with the Maxwell Unified School District; the Sites Authority, in compliance with an approved Impact Alleviation Agreement or Development Agreement, shall be responsible for providing a funding commitment to the County and the Maxwell Unified School District to assist with any applicable associated administrative services to secure grants; the Maxwell Unified School District is responsible and accountable for seeking and establishing a Safe Routes to School Program; and Sites Contractors shall be responsible for holding their workforce accountable during the construction and operation of the Sites Reservoir project.
	CS-4 *Coordinate with the Sites Authority and the Sheriff's Department to ensure that the truck and construction roadway segments identified in the Sites Reservoir Environmental Impact Report (EIR) are used throughout the duration of construction activities at Sites Reservoir, and truck and worker vehicles are not utilizing non-approved local roadways in Maxwell.*	R	A	C	C	I	R	I	The County is responsible for the Sheriff's enforcement; the Sites Authority, in compliance with an approved Impact Alleviation Agreement or Development Agreement, shall be responsible and accountable for alleviating impacts associated with service demand increases related to construction and workforce road use, and for the implementation of mitigation measures identified in the Sites Reservoir Environmental Impact Report (EIR); Sites Contractors shall be responsible for holding their workforce accountable during the construction and operation of the Sites Reservoir project.
	CS-5 *Monitor pavement conditions throughout the community and correct existing deficiencies. A reassessment should be completed following construction of Sites Reservoir.*	A	R	C	C	C	R	C	The County is responsible and accountable for local roadway conditions and the ongoing assessment. The Sites Authority, in compliance with an approved Impact Alleviation Agreement or Development Agreement, shall be responsible for alleviating impacts related to construction and workforce road use; and Sites Contractors will be responsible for any associated payment repair.
	CS-6 *Encourage the Sites Authority to include provisions for local roadway improvements and post-construction roadway repair in contractor bids and in ongoing agreements with the County.*	R	A	C	C	C	R	C	The County is responsible for encouraging the Sites Authority; the Sites Authority is accountable for including provisions for local roadway improvements; and the Sites Contractors are responsible for implementing local roadway improvements and post-construction roadway repair.
	Economic Development Strategies								
	ED-1 *The County should focus business attraction on a two-pronged strategy – short-term/temporary solutions for the short-term influx of workers through Maxwell, and long-term solutions for future tourism expansion.*	A	I	I	I	I	N/A	I	The County is responsible and accountable for economic development, tourism, and business attraction.
	ED-2 *The County should consider amending the Zoning Code to include provisions that allow food trucks, other mobile/temporary businesses, and workforce park-n-ride lots to be located on commercially and industrially zoned parcels in Maxwell during the multi-year construction phase of the Sites Reservoir Project.*	A	C	I	C	I	R	I	The County is responsible and accountable for amending the Zoning Code and code compliance/enforcement. Sites Contractors are responsible for establishing workforce park-n-ride lots and requiring the workforce to park in designated locations.
	ED-3 *The County should consider collaborating with local land owners to identify potential hotel development sites near I-5 and work closely with a hotel site selector to determine the feasibility of establishing a new hotel in Maxwell.*	A	I	I	C	C	N/A	I	The County is responsible and accountable for collaborating with local land owners to identify potential hotel development sites.

	ED-4 *The County should encourage local landowners to rehabilitate existing vacant commercial spaces for permanent business locations, and encourage the establishment of tourist-serving business such as boating/fishing, supplies, food service, etc. Consider incentives such as tax breaks or grant funds to attract developers, and leverage existing business assistance initiatives (including CDBG participation and small business programs).*	A	N/A	I	C	C	N/A	I	The County is responsible and accountable.
	ED-5 *The County should strongly encourage the Sites Authority to include local hiring requirements in all contractor bids, and proactively work with the North Central Counties Consortium to establish and implement local labor training programs to upskill the existing local labor force to meet the needs of Reservoir construction activities.*	R	A	I	N/A	N/A	R	N/A	The County is responsible for encouraging the Sites Authority; Sites Authority is accountable for including local hiring requirements in all contract bids; and Sites Contractors are responsible and accountable for establishing and implementing local labor training programs to meet project construction needs.
	ED-6 *The County should use the visitor-serving potential of the Sites Reservoir to develop a broader tourism marketing program for Colusa County. Engage with regional tourism marketing partnerships to promote Sites Reservoir as a destination for the Sacramento Valley.*	A	R	I	I	I	N/A	C	The County is accountable for regional marketing and collaborating with any Sites Reservoir marketing efforts; the Sites Authority is responsible and accountable for tourism marketing that promotes Sites Reservoir as a tourist destination. should financially contribute to a regional tourism marketing campaign to promote the Sites Reservoir as a destination.
	ED-7 *The County should encourage and facilitate the expansion of energy-based jobs and economic development opportunities in Maxwell on industrial sites physically separated from sensitive receptors. The County should update the Zoning Code to allow uses such as hydrogen production, biomass cogeneration, underground hydrogen storage, etc. by right in appropriate industrial zones, and develop standards for setbacks, operational safety and storage requirements, and site security.*	A	N/A	C	C	C	N/A	C	The County is responsible and accountable for amending the Zoning Code.
	ED-8 *The County should identify a County grants coordinator, and partner with the Sites Authority, to proactively pursue state and federal funds to implement improvements identified in this plan.*	A	R	C	C	C	N/A	C	The County is responsible and accountable for seeking funding and applying for grant funds. The Sites Authority, in compliance with an approved Impact Alleviation Agreement or Development Agreement, shall be responsible for providing a funding commitment to the County to assist with the applicable associated administrative services.
	Downtown Maxwell Strategies								
	D-1 *The County should prepare and adopt Design Guidelines for Downtown Maxwell. The Guidelines should include provisions for residential and commercial design standards, streetscape and public space beautification, and preserve and protect the historic character of Downtown Maxwell.*	A	N/A	C	C	C	N/A	C	The County is responsible and accountable for preparing and adopting Design Guidelines for Downtown Maxwell.
	D-2 *The County should take proactive steps to improve the physical appearance and economic vitality of Downtown Maxwell. Strategies for consideration may include:* *Formation of a Community Facilities District (CFD), which is a special tax district that could fund public improvements and on- going services within the Downtown. Parks, streets, sewer improvements, and public safety services are some of the public improvements and services that may be financed by a CFD.* *Facilitate building façade and exterior improvements assistance program for Downtown Maxwell.* *Invest in landscaping and street improvements to boost general awareness, enhance walkability and vitality, and attract visitors.*	A	N/A	C	C	C	N/A	C	The County is responsible and accountable.

RESOLUTION NO. 25-006

RESOLUTION OF THE COLUSA COUNTY PLANNING COMMISSION RECOMMENDING THAT THE COLUSA COUNTY BOARD OF SUPERVISORS APPROVE A STATUTORY EXEMPTION AND THE MAXWELL COMMUNITY PLAN

WHEREAS, on March 26, 2024, the Colusa County Board of Supervisors approved Contract No. C24-034 a Memorandum of Understanding with the Sites Project Authority for the creation and implementation of the Sites Reservoir Area Plan and the Maxwell Community Plan per the requirements of the County's General Plan;

WHEREAS, on April 23, 2024, the Colusa County Board of Supervisors approved Contract No. C24-050 with DeNovo Planning Group to prepare the Sites Reservoir Area Plan and the Maxwell Community Plan with funding from the Authority;

WHEREAS, community engagement workshops were held on June 20, 2024, and July 24, 2024, to gather community feedback and input on community priorities to be addressed in the Maxwell Community Plan; and

WHEREAS, the administrative draft Maxwell Community Plan was presented to the Colusa County Board of Supervisors on December 17, 2024, for the initial review and input;

WHEREAS, a third community engagement workshop was held on February 13, 2025, to gather community feedback and input on the Administrative Draft Maxwell Community Plan for incorporation into the Final Draft Maxwell Community Plan;

WHEREAS, the final draft Maxwell Community Plan was presented to the Colusa County Planning Commission on June 4, 2025, and the Board of Supervisors on June 17, 2025, for their review and input;

WHEREAS, a fourth community engagement workshop was held on September 18, 2025, to gather community feedback and input on the revisions to the final draft Maxwell Community Plan in response to feedback received during the June 2025 review by the Colusa County Planning Commission and Board of Supervisors, and the Maxwell Community Plan RACI Matrix for plan identified implementation strategies;

WHEREAS, Colusa County is the Lead Agency under the California Environmental Quality Act (CEQA) for the project and has determined that a Statutory Exemption is appropriate for the proposed project;

WHEREAS, in accordance with California Government Code, the Colusa County Planning Commission conducted a public hearing on the proposed Maxwell Community Plan detailed in Exhibit "A" attached to this resolution; and

NOW, THEREFORE, BE IT RESOLVED that the Colusa County Planning Commission, based on facts contained within the Planning Staff's report on the Project (including, without limitation, the final draft Maxwell Community Plan and proposed environmental determination), all public testimony, all other written and oral testimony, and totality of the public record of the Project makes the following findings:

1. The Maxwell Community Plan detailed in Exhibit "A" attached hereto and incorporated by reference is consistent with the General Plan, the County Code, and all other applicable plans or regulations; the Maxwell Community Plan is in conformance with the public convenience and general welfare of persons residing in the immediate area and will not be detrimental or injurious to property or persons in the general neighborhood or the general welfare of the residents of the County as a whole; and the Maxwell Community Plan will promote the orderly development of property or the preservation of property values in the Maxwell area.

2. That the proposed project is exempt from the California Environmental Quality Act (CEQA) pursuant to Title 14, Division 6, Chapter 3, Article 5, Section 15061(b)(3) of the California Code of Regulations because there is no possibility that this project may have a significant effect on the environment.

NOW, THEREFORE, BE IT FURTHER RESOLVED that based upon the findings of the Resolution, the Colusa County Planning Commission recommends to the Colusa County Board of Supervisors that the Board approve a Statutory Exemption pursuant to Title 14, Division 6, Chapter 3, Article 5, Section 15061(b)(3) of the California Code of Regulations because there is no possibility this project may have a significant effect on the environment and approve the Maxwell Community Plan, attached hereto as Exhibit "A" and incorporated herein by reference subject to any minor amendments by County Counsel.

PASSED AND ADOPTED by the Colusa County Planning Commission on the 1st day of October, 2025, by the following vote:

AYES: Commissioners Dave McCullough, Heath Krug, Gerry Nall, Kirk Pendleton and Elizabeth Yerxa.

NOES: None.

ABSENT: None.

Heath Krug, Chair,
Colusa County Planning Commission

ATTEST: Xzandrea Fowler, Secretary
to the Colusa County Planning Commission

Ann Nordyke, Chief Deputy Clerk

APPROVED AS TO FORM:

Jennifer Sutton, Sr. Deputy County Counsel

EXHIBIT A



MAXWELL
COMMUNITY PLAN

A Vision for the Maxwell Sites Reservoir Area

Prepared for:

Colusa County
Community Development Department
1213 Market Street
Colusa, CA 95932
530.458.0480

COLUSA COUNTY
— CALIFORNIA —

Prepared by:

De Novo Planning Group
Ben Ritchie | Principal
1020 Suncast Lane #106
El Dorado Hills, CA 95762
916.949.3231

September 2025

Table of CONTENTS

04 | Introduction & Purpose

Provides an overview of the Maxwell Community Plan's goals, setting the framework for responsible development.

06 | Sites Reservoir Overview

Details the role and impact of the Sites Reservoir on Maxwell, including potential expected benefits for local and regional growth.

11 | Existing Conditions in Maxwell

Reviews Maxwell's current economic, and environmental conditions to establish a foundation for proposed planning initiatives.

19 | Community Outreach Efforts

Summarizes the engagement efforts with local residents, stakeholders, agencies and other stakeholders to ensure the plan reflects community needs and priorities.

23 | Key Issues

Identifies the primary challenges and directives Maxwell will be addressing through the community plan.

25 | Goals, Strategies & Implementation

Outlines actionable steps to achieve the plan's vision.

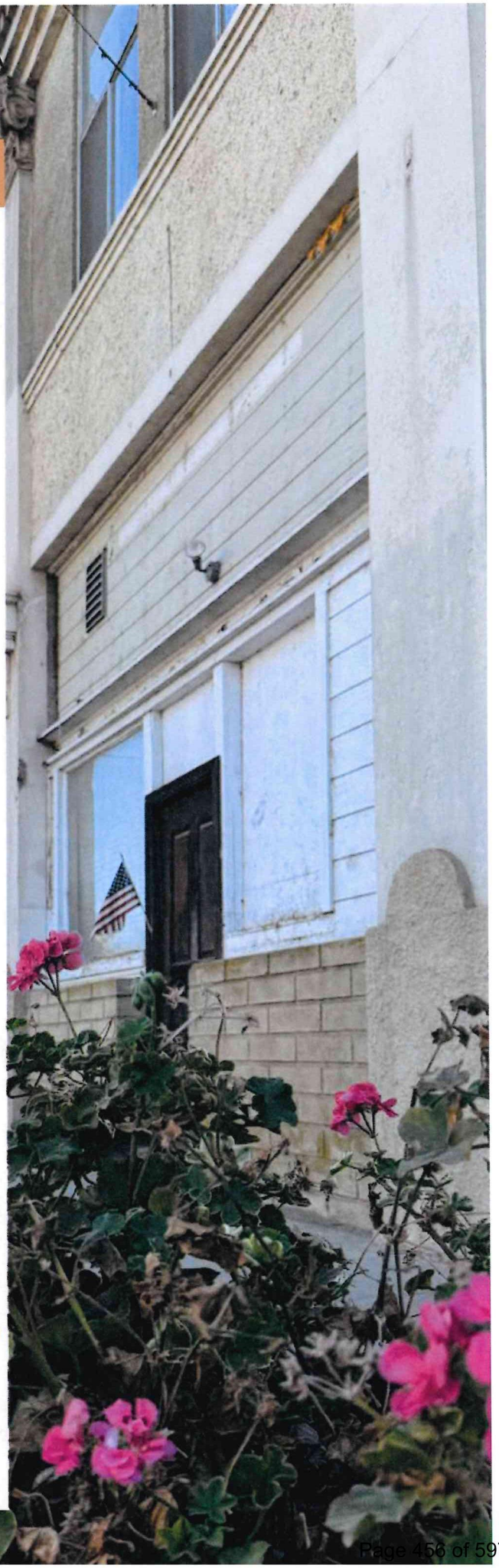



INTRODUCTION & PURPOSE

1.0: Executive Summary

The Maxwell Community Plan has been developed in order to help guide and shape future conditions in Maxwell, and is spurred in part by the pending construction and operation of the Sites Reservoir Project.

This community plan has been prepared to reflect the guidance and direction for the Maxwell community articulated in the Colusa County General Plan, and responds to the vision and local priorities expressed by Maxwell residents and local agencies.

The chapter is organized into the following sections:

1.1 Vision Statement

1.2 Objectives

1.1: VISION STATEMENT

This vision statement is an aspirational description of how the Maxwell community should look and feel when the Maxwell Community Plan is implemented incrementally in subsequent years.

- **Ensure that Maxwell has effectively capitalized and responded to the opportunities and challenges afforded and posed by the construction and operation of Sites Reservoir.**
- Support Downtown Maxwell as the historic heart of the community where the past is celebrated, and the future is embraced.
- Maxwell remains grounded in its agricultural roots, while providing expanded economic development opportunities related to tourism, services, alternative energy, and construction/ manufacturing.



SITES RESERVOIR OVERVIEW

2.0: Summary

The Sites Reservoir, a proposed off-stream water storage project located west of Maxwell, offers critical water storage potential for California's water supply challenges, aiming to capture excess runoff in wet years to provide reliable water resources during dry periods. This project promises economic, environmental, and community benefits, including improved water security, job creation, and increased recreational opportunities. This overview introduces the reservoir's anticipated role within the community, aligning with long-term sustainability goals for the Central Valley and beyond.

The chapter is organized into the following sections:

2.1 Sites Reservoir Context

2.2 Sites Reservoir Description

2.1: Sites Reservoir Context

2.1.1: PROJECT HISTORY

The concept for a surface water storage facility at Sites originates in the 1950s where the location was proposed as a reservoir location to meet growing water demands throughout the State. Sites was not officially considered by developers until 1995 when the CALFED Bay-Delta Program (CALFED) initiated the evaluation of expanded surface water storage in the Sacramento and San Joaquin Valleys as a part of a long-term plan to restore the ecological health of the Sacramento-San Joaquin Delta and its watershed. CALFED initially identified and analyzed over 50 potential surface water storage locations across the state during the development of its environmental impact report and environmental impact statement. This screening of potential locations indicated a preference for offstream surface water storage to avoid redirected impacts on aquatic species in the primary tributaries in the Delta.

Figure 1. Vicinity Map

EXHIBIT A

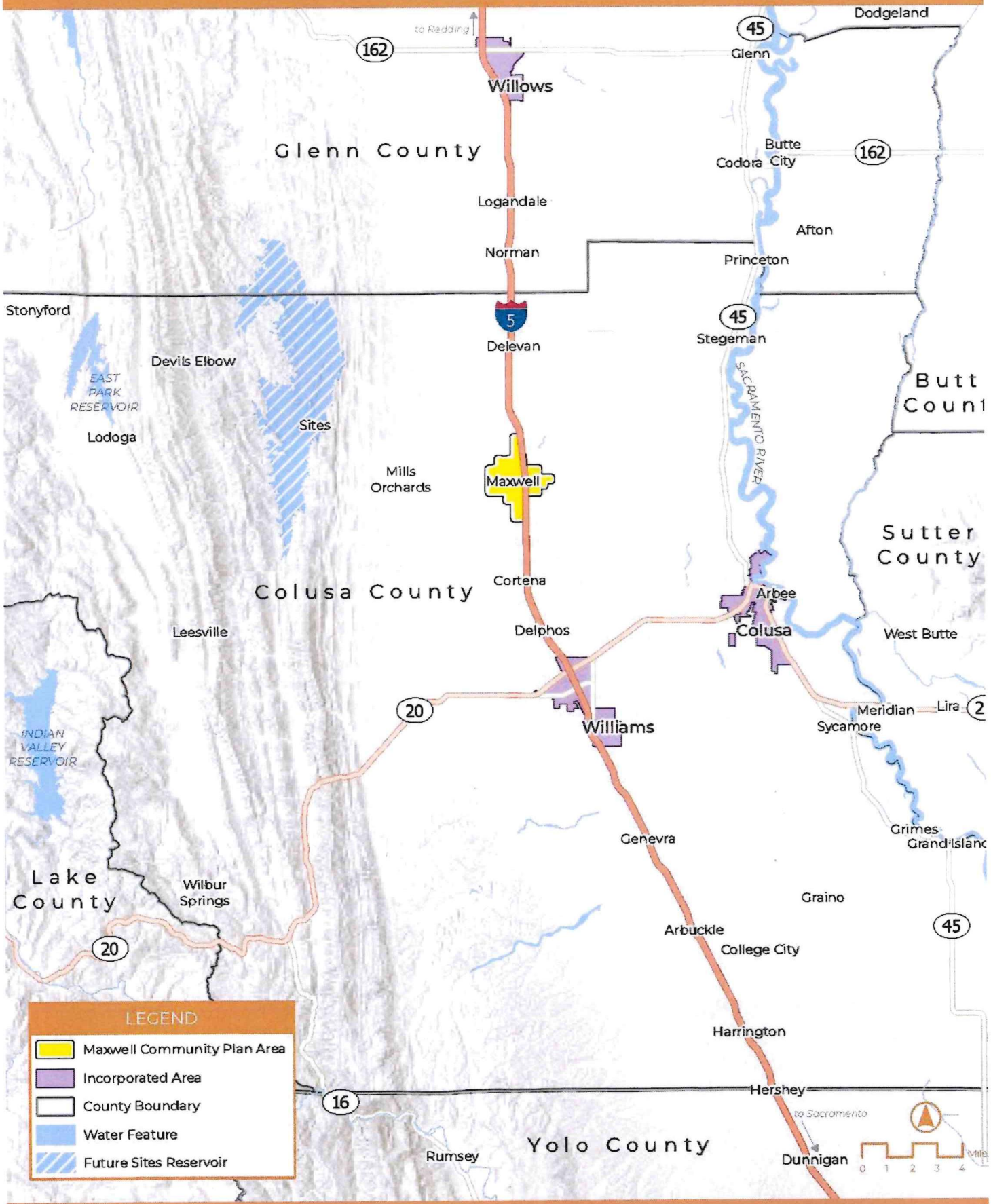

2.2.4: SITES RESERVOIR CONSTRUCTION AND EMPLOYMENT

The construction of Sites Reservoir is anticipated to occur over an approximately 7-year period and may ultimately employ or use the services of 4,000 or more persons. Total employment needs will vary year by year throughout the duration of project construction, with years 2 and 4 projected to have the highest employment levels. At peak employment during year 2 of construction, 1,000 or more workers may be employed during construction operations. Year 7 is projected to have the lowest employment levels at approximately 158 workers employed.

The Sites Authority has projected that project jobs such as laborers, haulers, carpenters, and other trades have the potential to be sourced primarily from the local area, while more technical jobs such as operating engineers, would be sourced from outside of the local area. The Authority's analysis identified the "local area" as consisting of the counties of Colusa, Glenn, Yuba, Yolo, Butte, Placer, Sacramento, Shasta, Sutter, and Tehama.

Once construction of the reservoir is complete, the Authority estimates that approximately 35 people would be employed annually to oversee and manage operation of the reservoir.



The nearest regional rail access stations are the Amtrak Stations along the "Coast Starlight" route, located to the south in both Davis and Sacramento, and to the north in Chico. Maxwell is served by the Colusa County Transit Agency, which offers a dial-a-ride system and one half-day trip per month to Yuba City. Transit service from Maxwell connects residents to surrounding communities, including Williams, Colusa, and Yuba City, on a limited basis.

3.1.2: LOCAL CONTEXT

Maxwell is an agricultural community within the Northern Portion of California's Central Valley. The town was officially recognized sometime between 1874 and 1877. The first mention of Occident (later to become known as Maxwell) occurred in the Weekly Colusa Sunday newspaper in the issue of March 17, 1877 when it reported that "a new town had been laid out on the survey of the Northern Railroad about 10 miles north of Williams called Occident. Then, on September 14, 1878, the Weekly Colusa Sunday Newspaper reported that "the Railroad Company had decided to call the town formerly known as Occident, Maxwell".

The community is largely composed of single-family residential neighborhoods with commercial uses located throughout the community, primarily along Old Highway 99W and Oak Street. Commercial, with industrial uses on the same road both in the outer areas of the community. Highway-serving commercial and additional industrial uses are along Maxwell Road concentrated near the on/off-ramps for I-5. Public and community uses in Maxwell include a community park, little league field, Maxwell Elementary School, Maxwell Middle School, and Maxwell High School.

As of 2022, Maxwell had population of 1,181 residents, which represents about 5.4% of the broader Colusa County population (21,811 residents). The median age of Maxwell residents is 30 years old. Maxwell has an estimate of 438 housing units and an average of 2.91 persons per household in owner-occupied units, and 3.17 persons per household in renter-occupied units. As of 2022, just about 11%, or 48 of the housing units in Maxwell are vacant. Of the occupied units, some 58% are owner-occupied while 42% are renter occupied. The median annual household income as of 2022 was approximately $64,000 with some15.7% of households below the poverty level.

Maxwell's economic characteristics are dominated by local agricultural operations with 42% of the working population employed by the agricultural sector. Other significant sectors include manufacturing (15% of workers) and public administration (14% of workers). Other employment sectors with a lesser percentage of the larger employment stock are educational services, transportation, utilities, construction, retail, and wholesale trade. The total number of employed residents in Maxwell, as of 2022, was 827, approximately 70% of the population.

Within the community itself there are few commercial uses including the Maxwell Inn, Bar, and Grill, Caldwell's Mini Mart, BM Bar Custom Meats, Herreras Bakery, Cy A. Hawkins Insurance, Grow West, and Pacific Metal Buildings . There are several public administration and utilities services operating out of Maxwell including the Maxwell Public Utility District, the Colusa County Road Department, the EnviroPro Energy Company, and the Sites Project Authority. The community is also served the Maxwell Branch Library of the Colusa County Library, and the Maxwell Parks and Recreation District.

According to the most recent employment data provided by the United States Census Bureau, approximately 220 of those employed at jobs in Maxwell live elsewhere and commute into the community for work. Approximately 298 of residents who live in Maxwell are employed elsewhere and commute to other areas for work. Approximately 18 people both live and work in Maxwell. The average commute time of workers living in Maxwell is approximately 21 minutes. These disparities are likely impacted by the large percentage of workers employed by agricultural operations, and the industrial/ construction sector, that typically require commuting outside of the community. The relative lack of jobs for those who live in Maxwell can also be attributed to its small size and location in Colusa County.

3.2: Utilities & Infrastructure

3.2.1: WATER

Water supplied to Maxwell comes from two sources: groundwater and surface water. As with all of Colusa County, domestic water is supplied with groundwater, while most irrigation systems are supplied with surface water. Water supply and distribution is managed by the Maxwell Public Utilities District (MPUD). The municipal water uses in Maxwell are supplied by three groundwater wells that have a total combined capacity of 1,225 gallons per minute (GPM). The District serves over 400 residential connections with a maximum daily pumping capacity for the three groundwater wells is 2,016,000 gallons per day (GPD) compared to an average daily pumping demand of 326,483 GPD, which is more than enough to support existing demand.

3.2.2: SOLID WASTE

Solid waste services in Maxwell is provided by Recology and coordinated in cooperation with Colusa County. The nearest solid waste facility is the Maxwell Transfer Station located just south of Maxwell on Old Highway 99. The facility's existing capacity, in conjunction with other nearby facilities, is adequate to support the solid waste needs of Maxwell and Colusa County as a whole. Currently, there is no program in Colusa County to handle and dispose of hazardous waste.


RAIL ROAD CROSSING
REPORT PROBLEM OR EMERGENCY
1-800-800-2203
X-ING 750 415C

Figure 2. Land Use Map

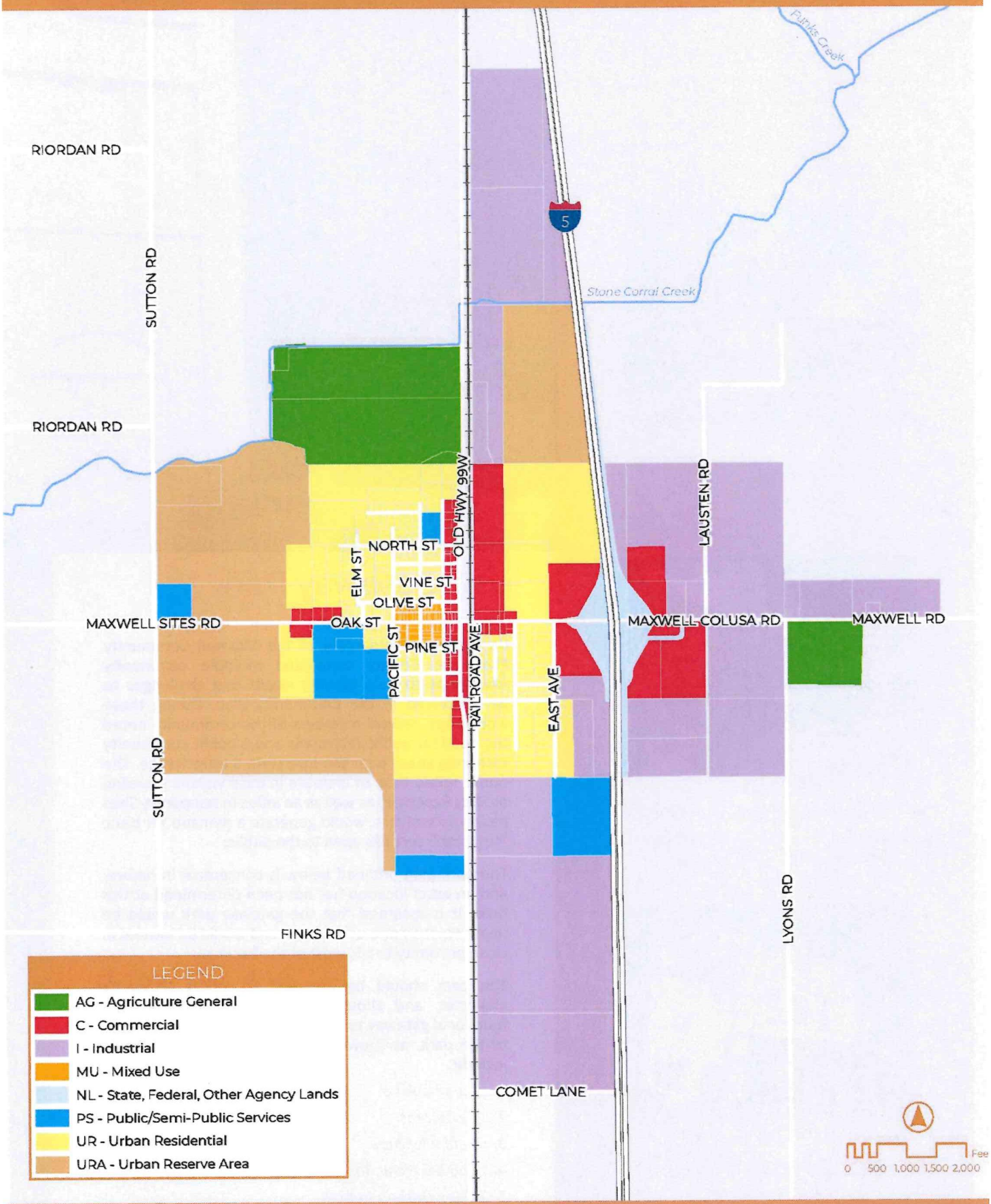

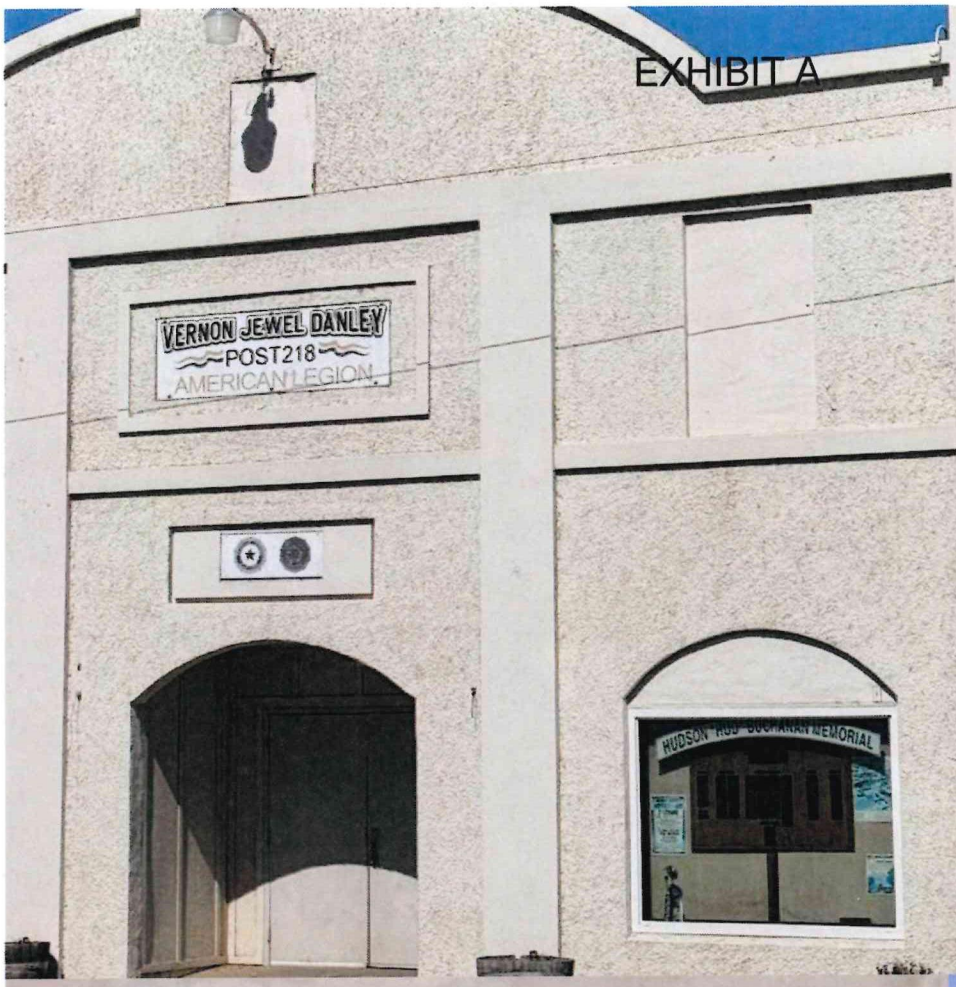
VERNON JEWEL DANLEY
POST218
AMERICAN LEGION

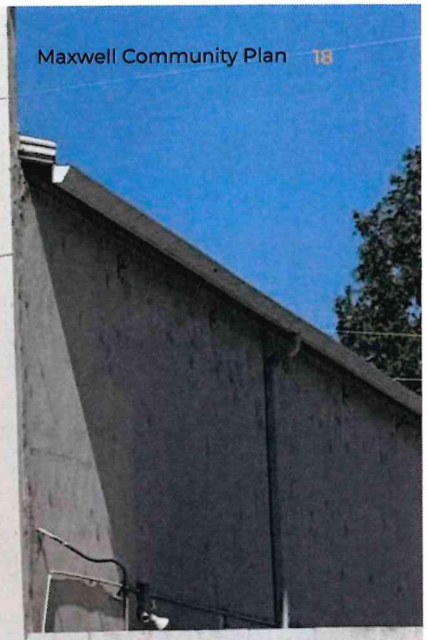

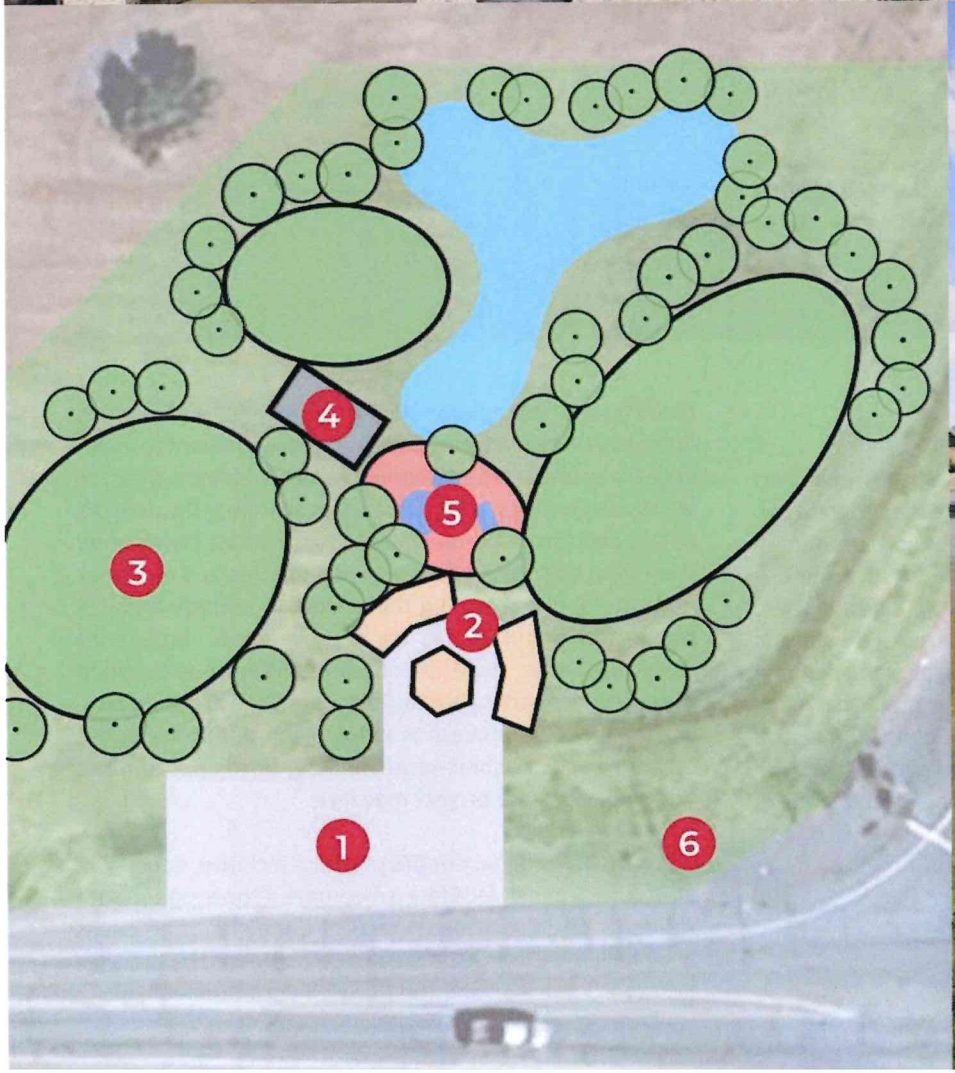
4
5
3
2
1
6

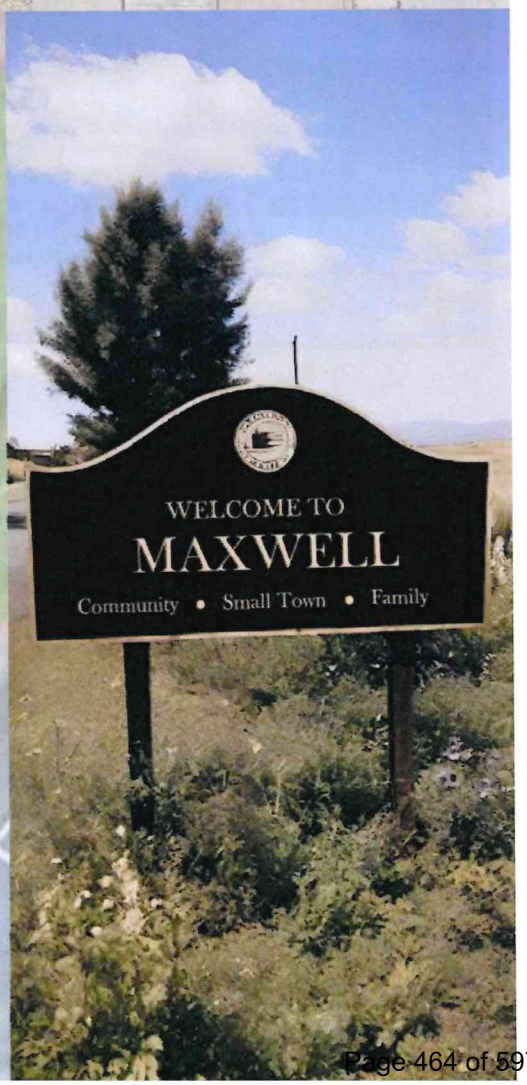
WELCOME TO
MAXWELL
Community • Small Town • Family

Community Outreach Efforts

Workshop details and feedback received are described below.

The Outreach Summary report is included as Appendix A.



Board of Supervisors

The Board of Supervisors held a kickoff meeting for the Maxwell Community Plan to introduce the planning efforts for the Maxwell Community Plan and detail the overview of the Sites Reservoir Project.



Sites Authority Workshop

The Sites Authority Meeting served as an introductory session to inform the Maxwell community and interested stakeholders about the Sites Reservoir Project, providing an overview of project details, anticipated benefits, and upcoming outreach opportunities to encourage community engagement and feedback.



Maxwell Community Workshops

De Novo Planning Group hosted two informational community workshops, along with Colusa County. These meetings were intended to gather feedback and comments from residents of Colusa County, local agencies, and other stakeholders regarding the Maxwell Community Plan and the Sites Reservoir Area Plan.

Scan the Barcode or visit the County of Colusa Website for more information.
www.countyofcolusaca.gov

Visioning Boards

The public was encouraged to provide feedback and comments on the project through a visioning board activity that displayed a map of the site, with space to attach post-it notecards with comments. Five vision boards received comments, with board four having two sets of comments (4A and 4B). This activity allowed members of the public to provide broad feedback on the project that can be considered by both De Novo Planning Group and Colusa County. The responses from this informational meeting were collected and are stated in the Outreach Summary Report which can be found on the project website.

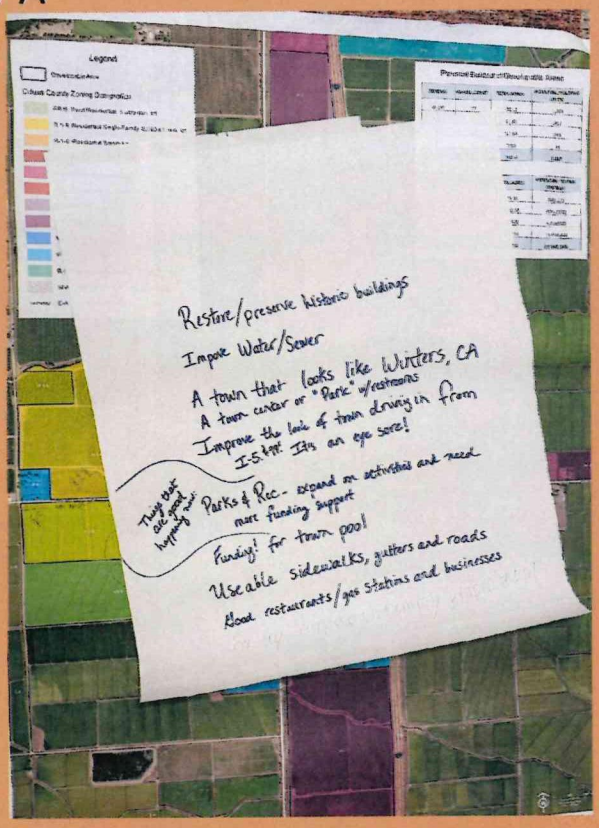



Goals for economic development throughout Maxwell are multi-faceted; emphasizing the expansion of industrial, highway commercial, and agricultural uses along the I-5 corridor and revitalization of the downtown area through the use of underdeveloped and vacant lots. Pursuing these goals can support economic diversification and long-term growth and stability of Maxwell while also solidifying the downtown area as the commercial and social core of the town. Improved pedestrian and active transportation connections between the downtown and residential neighborhoods can be supported through infrastructure improvements to sidewalks, pedestrian pathways, and the development of bicycle lanes.

The General Plan also provides a framework for pursuing funding opportunities for community beautification and economic development. Applications for Community Development Block Grant/Technical Assistance and Economic Development Allocation funds, as well as partnerships with local businesses and interested parties can provide needed funds to support existing/ new opportunities. Further exploration into Main Street Programs and the establishment of business districts also provides additional funding for broader goals set forth in the General Plan.

Appendix B details the Colusa County General Plan policies.

> **If the Sites Reservoir project is approved, develop a Maxwell Community Plan to capitalize on economic development opportunities, including lodging, shopping, dining, and other tourism uses, created by increased visitors and County residents using Sites Reservoir. The Maxwell Community Plan shall emphasize aesthetic and design standards that recognize the historic character of Maxwell and importance of the area as the gateway to recreation opportunities in the western County.**

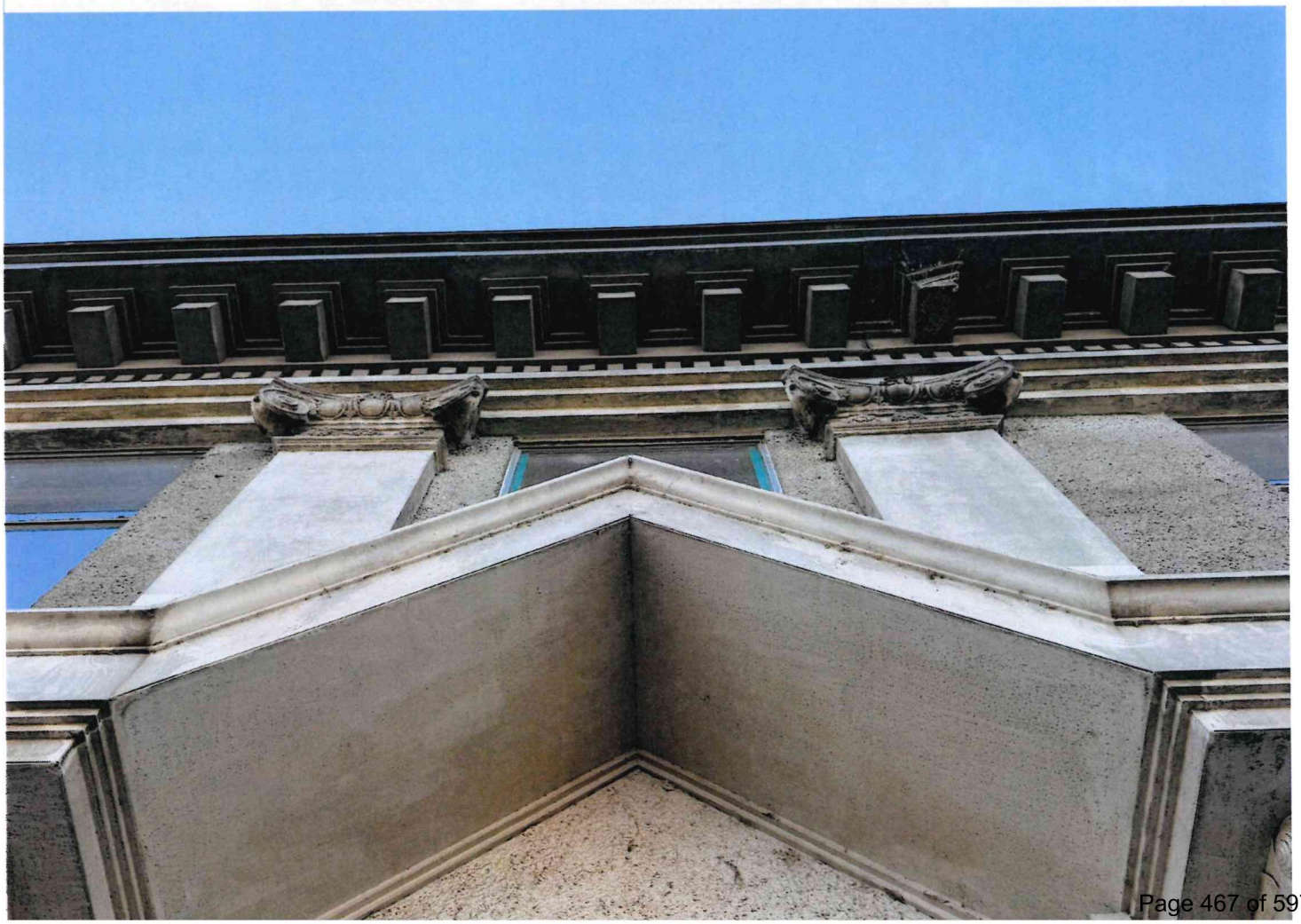

Housing

H-1 *The County should consider amending the Zoning Code to provide for the ability of local landowners to establish temporary workforce housing utilizing recreational vehicles. The Zoning Code amendment should consider such factors as the permit process, appropriate locations and zoning districts, development standards, temporary utility provisions, the need for transit occupancy tax, and post construction restoration requirements.*

H-2 *The County should establish standards and provisions that ensure that any properties used for temporary workforce housing during the construction of Sites Reservoir are not permitted to provide ongoing temporary housing following reservoir construction. These provisions should include standards and requirements that ensure any trailers or other temporary housing units are removed, that the site is cleaned of all waste and housing remnants, and that any temporary support infrastructure such as fencing or restrooms are removed.*

H-3 *The County should consider amending the Zoning Code to allow residential properties that were re-zoned to commercial uses in the County's comprehensive 2014 Zoning Code update to construct accessory dwelling units (ADUs) under similar requirements as residential zoned properties.*

H-4 *The County should consider amending its Zoning Code to allow rental housing units to be established on commercial zoned property in the downtown Maxwell area, and potentially the downtown areas of the other unincorporated communities throughout the County of Colusa.*

H-5 *The County should consider amending its Light Industrial Zoning District to permit the establishment of Mobile Home and Special Occupancy Parks.*

H-6 *The County should explore how to further streamline its ADU permit process which could include the development of a set of pre-approved building permit plans for ADU's.*

H-7 *The County should seek to stabilize and improve housing conditions in existing residences and neighborhoods in Maxwell by seeking state and/ or federal funding through CDBG, HOME, BEGIN, and/ or Cal HOME for housing rehabilitation and/ or home ownership activities on a regular basis.*

H-8 *The County should explore a range of tools and strategies to spur additional permanent housing development in Maxwell. Strategies may include, but are not limited to, streamlined development permitting, reducing permitting fees, assistance with infrastructure costs and extensions, and other strategies to reduce the cost of housing unit construction.*

H-9 *The County should encourage the Sites Authority to include provisions in their contracting requirements to encourage Site Reservoir construction firms to provide assistance to the local community to rehabilitate existing housing units to be used for both short term and long term permanent construction workforce housing.*

H-10 *The County should consider expanding code enforcement activities in Maxwell to identify dilapidated and sub-standard housing units, and connect owners with resources that provide financial assistance to improve the condition of their housing units.*

Infrastructure

I-1 *The County should support ongoing efforts by the Maxwell PUD to help ensure sufficient municipal services and infrastructure to meet short- and long-term needs of the community. This may include, but is not limited to, proactively pursuing funding opportunities, including State and federal grants, fees, taxes and assessments, and other funding sources to:*

- *Replace antiquated concrete wastewater conveyance piping with modern PVC pipes.*
- *Expand water treatment capacity and/or secure new land to drill a new water well to replace Well #6.*
- *Extend water and sewer conveyance lines east of I-5.*

I-2 *The County should require new urban development (commercial, residential, and industrial) to connect to municipal water and wastewater services provided by the Maxwell PUD, consistent with the requirements established in the General Plan. Exceptions may be granted for temporary or short-term workforce housing, provided that it can be demonstrated that adequate and water and wastewater services can be provided.*

Community Facilities

CF-1 *The County should support the Maxwell Park and Recreation District in constructing a gateway entry park west of I-5 along Maxwell Colusa Road or Old Highway 99. The gateway park should have distinct and well-designed signage, signaling to visitors that they have entered the community of Maxwell, and should include public restrooms and a pet relief area. The gateway park should also include features such as lawn areas, shade, and picnic tables.*

CF-2 *The County should support the Maxwell Park and Recreation District as it seeks opportunities to expand parks and recreational facilities in the community through the acquisition of additional lands and the improvement and expansion of existing facilities.*

CF-3 *Support the Maxwell Unified School District in campus beautification efforts and maintenance of joint-use recreational facilities.*


MAXWELL
INN
BAR & GRILL
OPEN

EXHIBIT A

Appendix A: Outreach Summary Report

area to be addressed by the Sites Reservoir Area Plan and the Maxwell Community Plan. Workshop details and feedback received are described below.

MAXWELL COMMUNITY WORKSHOP #1



Activity: Community Discussion

De Novo Planning Group hosted an informational community workshop, along with Colusa County staff, on June 20th, 2024 at the American Legion Building located at 250 Oak Street in Maxwell, CA. This meeting was intended to be an informational session for members of the public to learn about the upcoming development of the Maxwell Community Plan and the Sites Reservoir Area Plan. Approximately 100 members of the public attended this meeting. The public was encouraged to provide feedback and comments on the project. While there was no formal activity undertaken at the meeting, there was an opportunity for the community to provide their input. The responses from this informational meeting were collected and sorted according to the broad project category to which they apply.

The community feedback can be broadly categorized into multiple issues and topics: traffic concerns, public utilities, economic development, funding, emergency services, and general community concerns. Throughout the discussion, many respondents expressed concerns about how increased traffic and changes to roadways may affect broader public safety. Participants expressed a desire for re-routing roadways towards commercial centers to improve economic development.

Another prominent concern raised was the potential to improve local utilities (water, sewage, drainage, etc.) to better meet both existing service demands, as well as potential increased service demands. Broader community concerns were raised about pedestrian safety during the construction process, especially regarding children near schools. Additionally, members of the community expressed concerns about temporary housing during the construction process and permanent housing to improve housing stock throughout the area.

COMMUNITY WORKSHOP #2



Activity #1: Visioning Board

De Novo Planning Group hosted an informational community workshop, along with Colusa County, on July 24th, 2024 in Maxwell, CA. This meeting was intended to gather feedback and comments from residents of Colusa County regarding the Maxwell Community Plan and the Sites Reservoir Area Plan. Approximately 50 members of the public attended this meeting. The public was encouraged to provide feedback and comments on the project through a visioning board activity that displayed a map of the site, with space to attach post-it notecards with comments. Five vision boards received comments, with board four having two sets of comments (4A and 4B). This activity allowed members of the public to provide broad feedback on the project that can be considered by both De Novo Planning Group and Colusa County. The responses from this informational meeting were collected and are stated below, verbatim.

Community Feedback	
Map 1	**Map 2**
• Add stop signs on Oak St. at high school/ at Elm St. • Put grocery store where old blue grocery store was?	• Restore/preserve historic buildings • Improve water/sewer • A that looks like Winters, CA • A town center or "park" with restrooms • Improve the look of town driving in from I-5 & 99! It's an eyesore! • Things that are good happening now: Parks & Rec – expand on activities and need more funding support • Funding! For town pool • Useable sidewalks, gutters and roads • Good restaurants/ gas stations and businesses • Fix up run down & empty properties!!!

EXHIBIT A

Site's Reservoir Area Plan & Maxwell Community Plan

Sites Reservoir Area Map and Maxwell Community Plan Project Site

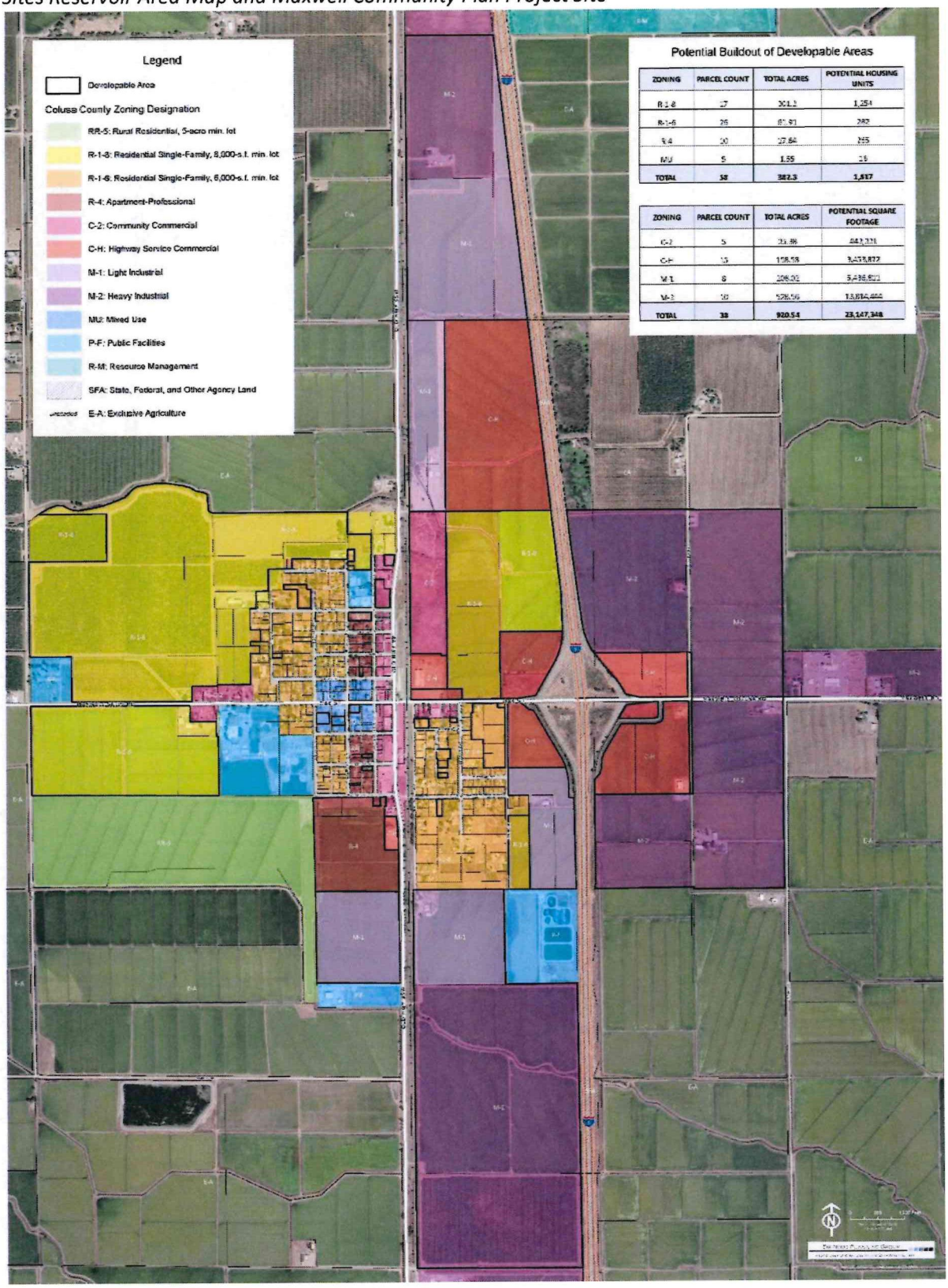

EXHIBIT A

Site's Reservoir Area Plan & Maxwell Community Plan

Vision Board #2

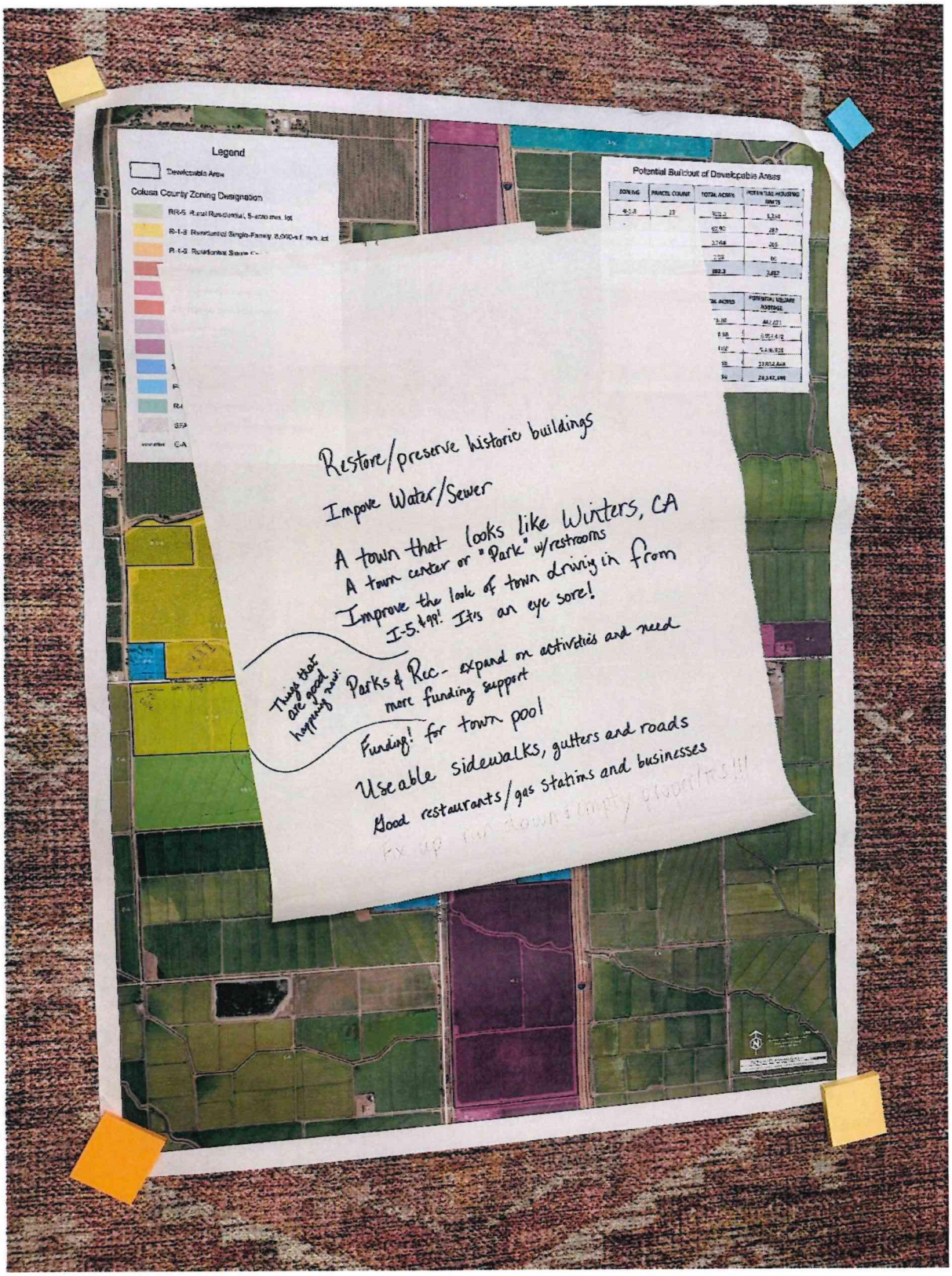

EXHIBIT A

Site's Reservoir Area Plan & Maxwell Community Plan

Vision Board #4A

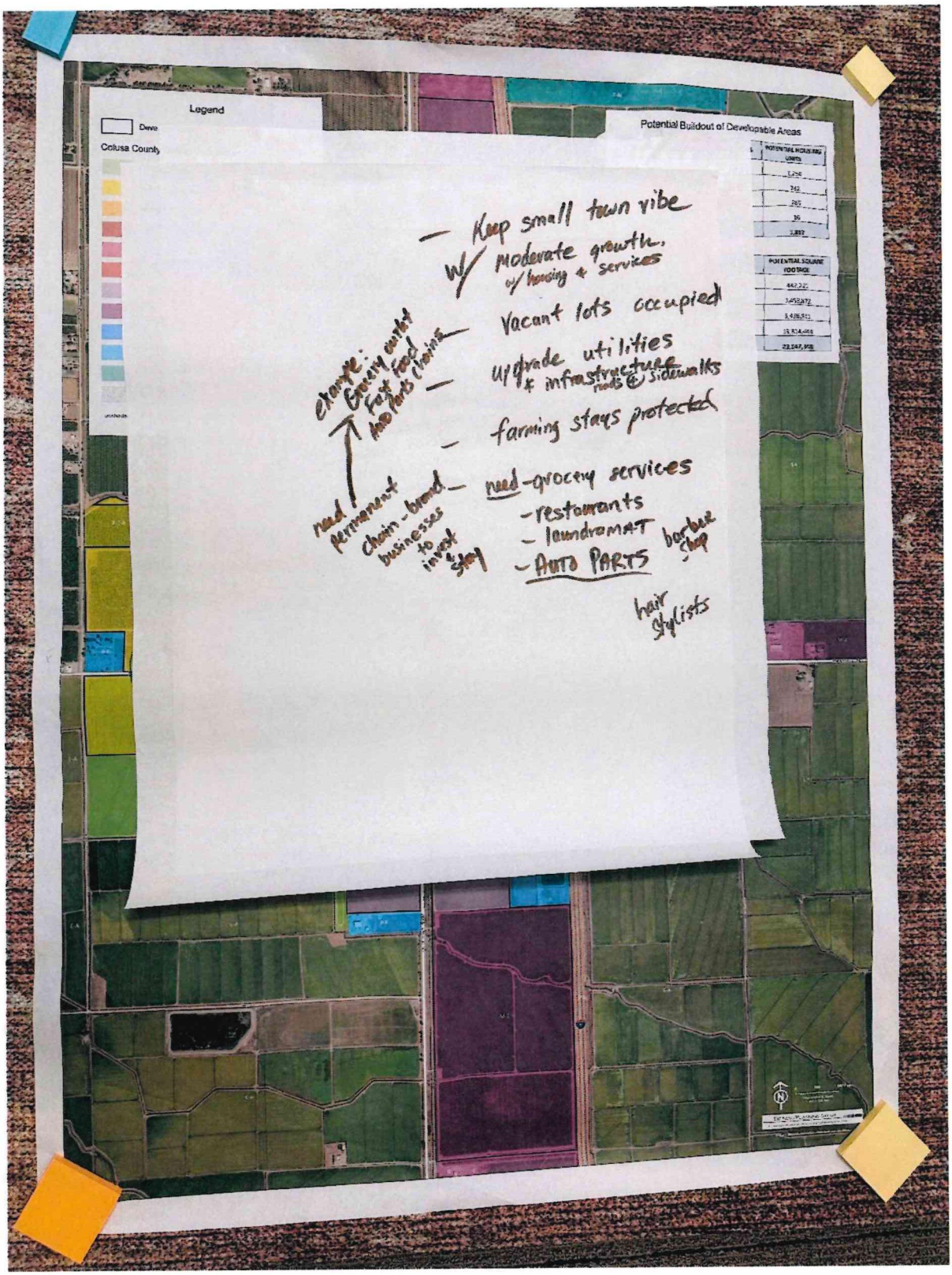

EXHIBIT A

Site's Reservoir Area Plan & Maxwell Community Plan

Vision Board #5

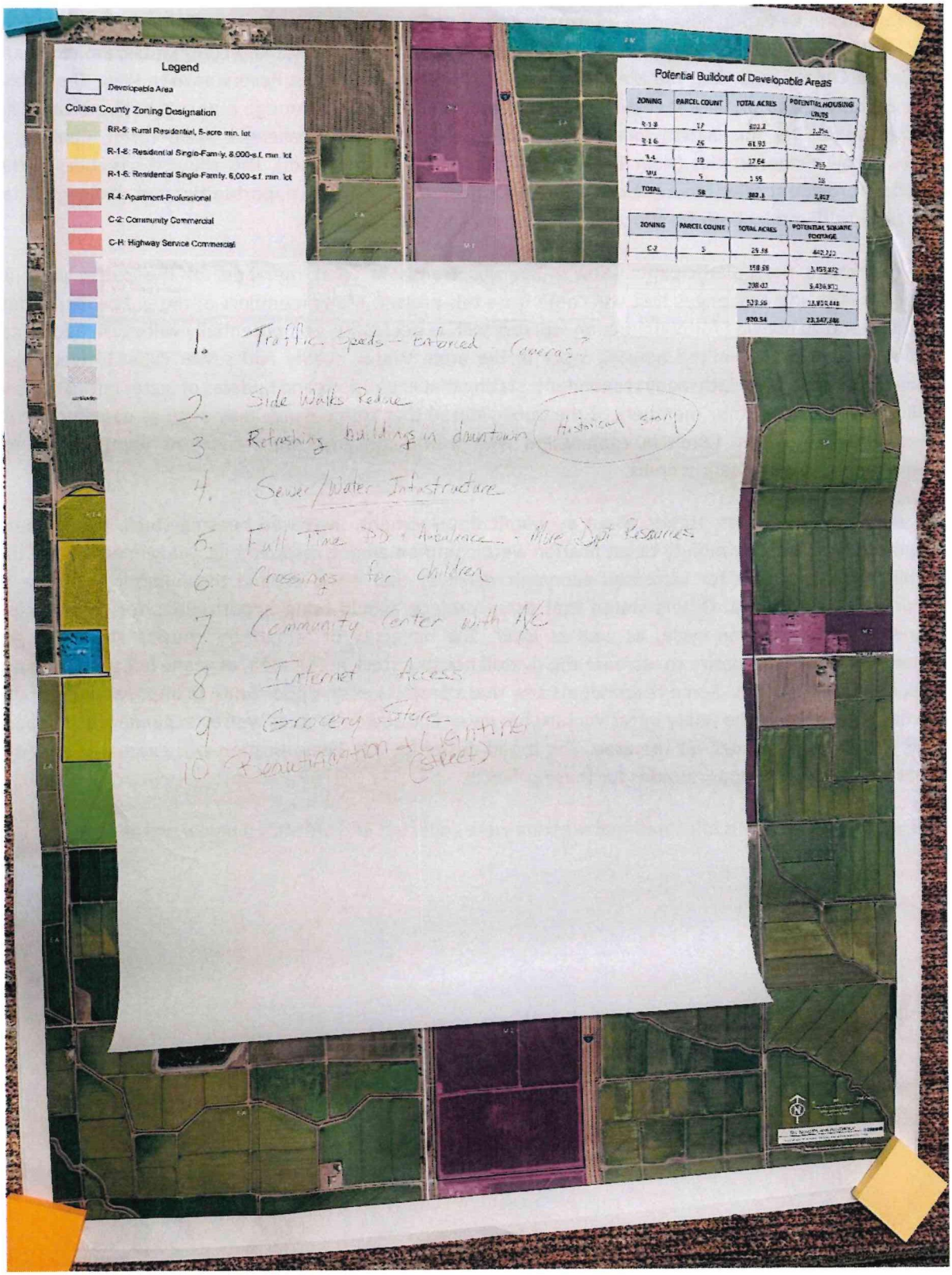

Community Feedback

Challenges (Near-Term)

- I have a 1 acre parcel with a home built in the 1950s. it is zoned commercial. I would like to be able to put an ADU for additional income but it would have to be rezoned.
- Time – 2 years is not enough to complete many projects
- Lodging for workers
- Storage
- Fuel – diesel
- Emergency services
- Rest stop
- Utilities – housing – traffic
- No capacity – no housing – public service
- Impact on schools – businesses may not keep pace with demand – law enforcement
- Housing (not enough) – poor infrastructure – no money to improve existing services and buildings or add new services – public services
- Police protection – fire protection – grocery store – medicine – rest stop – road improvements
- Housing near
- Stop signs need to be installed on Oak St.
- Housing – traffic
- Stop signs/controlled intersections throughout the whole town
- Potential for additional school students – schools may need to be expanded
- Sewer upgrade – water needs – housing for workers
- Water/sewer isn't capable to handle what we have now
- Limited housing accommodations – limited resources for influx population – environmental damages & financial burden
- Housing
- Preserving/restoring original Maxwell Building
- Housing shortage exists now, even without 1000+ worker influx
- Foot/bike traffic paths & street lighting
- Upgrade septic – water quality filter system +pressure – zonings
- Housing – traffic – grocery stores
- Traffic – accommodations/housing – services
- Revenue – jobs – growth – housing shortages – traffic – school overcrowding
- Traffic control – influx of workers & housing shortages – lack of infrastructure
    - Stores
    - Eating joints
- Housing – support infrastructure
- Construction traffic – temporary housing – water use?
- Traffic (trucks and workers) – supplies (groceries – fuel) – water/sewer – police – fire – improvements support
- Traffic control – traffic flow – available housing – water quality
- Traffic – current road conditions – current infrastructure

  - Retail stores?
  - Schools
- Infrastructure – roadways/sidewalks – planning housing
- Housing – traffic – businesses + services
- New housing construction – crime – more business – restaurants – gas
- Permanent housing – lack of stores/hotels – infrastructure (roads, pipes, power)
- Stores + service
- Population after dam built? Continued funding sources for the town if maintained – traffic control
- Commerce – improve aesthetics
- Improve city beautification
- Safety (fire + law enforcement) – sewer capacity – housing
- Police/safety – road maintenance



Opportunities (Near-Term)

- First, new HVAC for this hall (and PA system). Second, new sewer lines
- Remodel 64 Oak Street as a visitor's center and basketball court for the kids
- First, a full time police dept. and ambulance service
- Short-term housing – supply (support food, fuel, internet)
- Jobs – restoration of businesses and services – investments & improvements in infrastructure
- More growth towards economy contribution of the county/city – employment opportunities – benefits from the government for initiating this project
- More commerce, food, stores
- Town services improved
- Local business sales support – tax increase
- Housing – temporary trailer parks to accommodate construction workers
- Make money (business & services make money) – employment for members of community
- Grow stores/restaurants – town park/facility stop – town beautification

Opportunities (long-Term)

- Housing opps. – revenue
- Increased ADA for schools (more $$$) – businesses that stay open after construction
- Parks, playground – more businesses
- Expansion of tourism economy – larger residential population – long awaited utility updates
- More jobs in county – more resources in Maxwell – more commuter resources
- Diversity in the community – growth of city – tourist attraction and increasing Maxwell city name
- Too many houses built remaining empty – infrastructure (roads, water, sewer, community services from county) – all are limited needs improvement
- Beautification of town – bike path – park
- Sheriff substation – more deputies in town – traffic lights – sewer
- Develop recreation – supply support services for recreation – develop support services for the committee housing for support personnel
- Recreational support services – storage space for boats and services
- Town services updated (water/sewer) – town beautification/town center/park
- Update old stores – have people be able to open new stores
- Grocery store – small sports complex for kids pool, baseball field, gym – sheriff substation
- Improve commerce – benefit from improved infrastructure + parks
- Rebuild/renew Main Street + sidewalks
- Financial growth/job opportunities – fast food (high school kid employment)
- Reservoir jobs – more public services – rezoning/more housing
- Business opportunities for seasonal use of reservoir
- To improve water in community – better streets – grocery stores – improve streets + roads



EXHIBIT A

Site's Reservoir Area Plan & Maxwell Community Plan

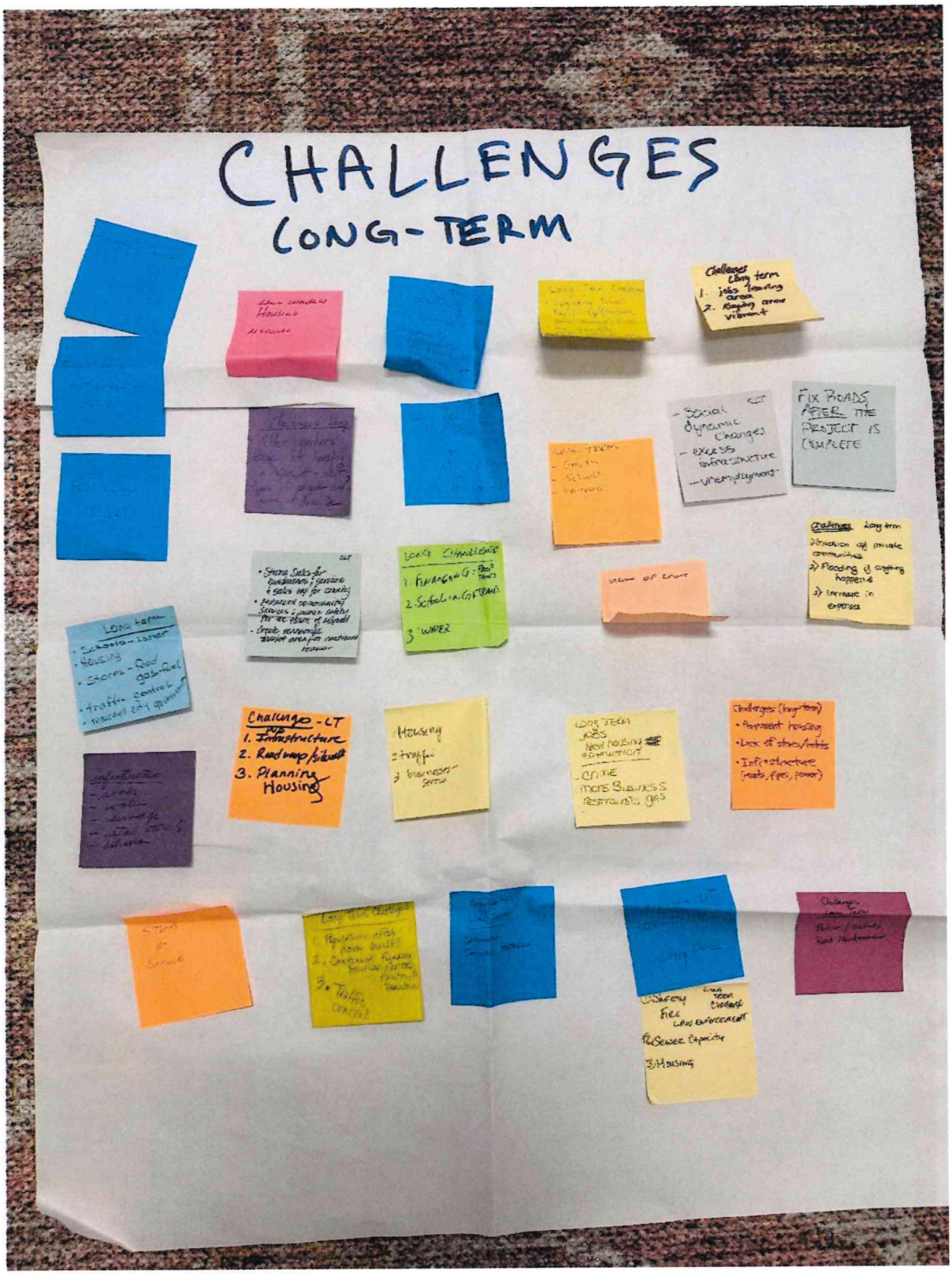

EXHIBIT A

Site's Reservoir Area Plan & Maxwell Community Plan

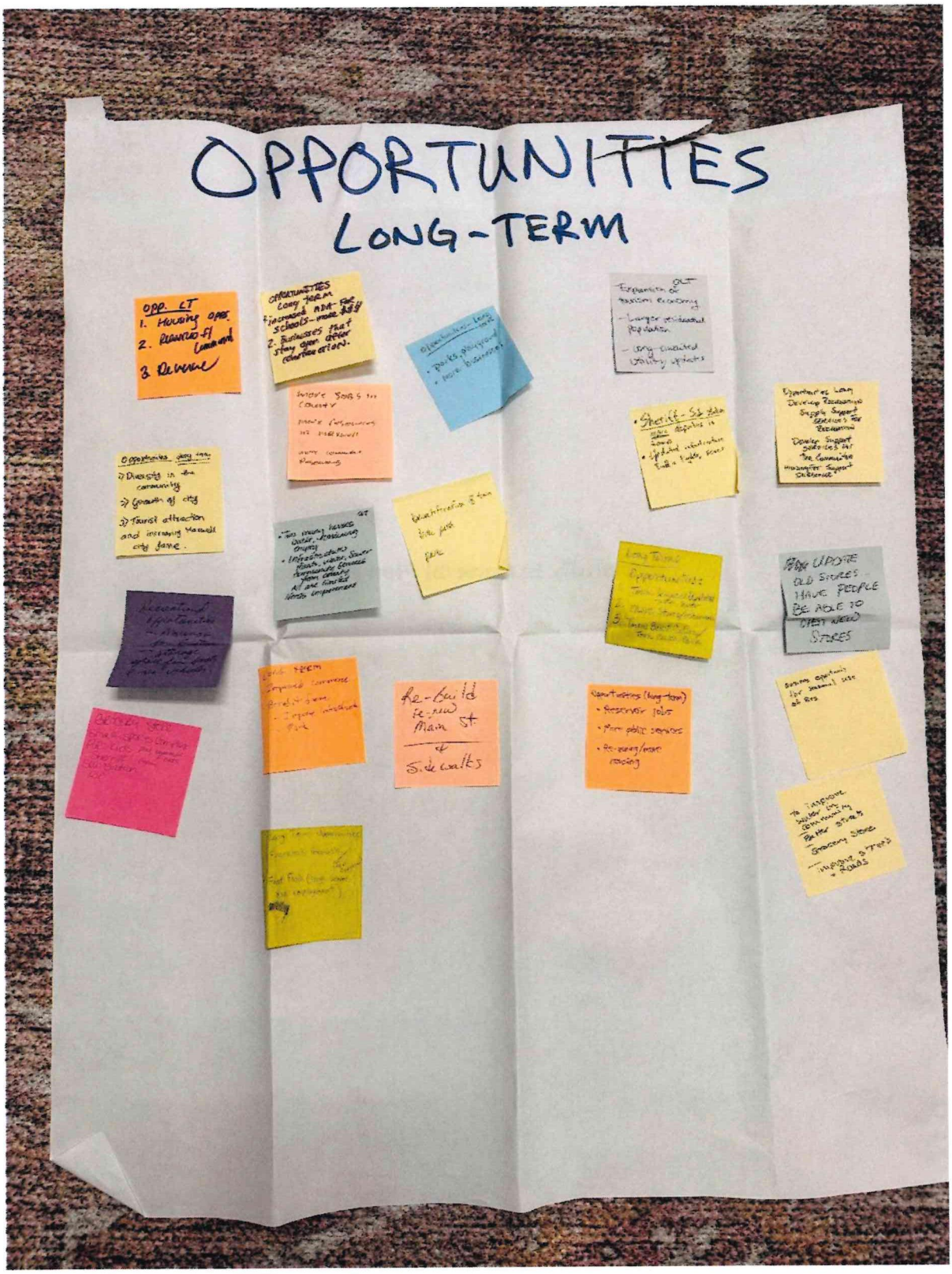

EXHIBIT A

Chapter 8. Land Use Element

Policy LU 1-10: Concentrate future development within or adjacent to the communities that provide urban services, including Arbuckle, College City, Colusa, Grimes, Maxwell, Princeton, Stonyford, and Williams, with an emphasis on placing large-scale and more intense development projects in these population centers as opposed to other rural and remote areas that lack public services and amenities or are not connected to an exiting community.

Policy LU 1-15: To conserve open space and agricultural lands outside of planned urban areas and provide the efficient use of public services, make land use decisions that reinforce the cultural and economic viability of unincorporated community centers of the County, including Arbuckle, College City, Grimes, Maxwell, Princeton, and Stonyford.

Policy LU 3-17: Ensure that zoning and land use designations at the Interstate 5 freeway interchanges at Arbuckle, Maxwell, and the unincorporated area near Williams are used for highway-oriented commercial use. These uses, which include hotels, restaurants, and service stations, should be oriented to interstate travelers, tourists, and visitors to the County's various open space recreation and agricultural opportunities. Development at these interchanges should be planned to minimize traffic and safety hazards on local streets and regional transportation facilities to the extent feasible.

> ***Action LU 3-C:*** *Revise the Zoning Ordinance to include updated design standards that promote attractive development for commercial, industrial, office, institutional, and multiple family development; include design recommendations that encourage "green" design construction; and address the following provisions:*
>
> 1. *Site planning sensitive to the natural environment and that addresses creating functional and attractive places.*
> 2. *Building rehabilitation and modification to improve existing structures.*
> 3. *Low environmental impact materials and products, including recycled and local materials, and recycling of construction waste.*
> 4. *Passive and active solar elements and use of efficient heating and cooling systems.*
> 5. *Standards for building design and appropriate use of materials to provide high-quality development, including requiring buildings to be sited toward the street, except for approved plazas, seating areas, and entry nooks; off-street parking, if any, located to the rear of the building or lot; architecture that incorporates a pedestrian scale with varied articulated facades, windows and building features; and community design features, such as landscaping, entry features, fountains, plazas, pedestrian furniture and similar features.*
> 6. *Landscaping and design elements to screen unsightly elements from public and neighboring views.*
> 7. *Standards for adequate off-street parking and alternatives to on-site parking in downtown and historic areas.*
> 8. *Standards for exterior lighting, signage, and trash/recycling containment facilities.*
> 9. *Gateway concepts for entryway treatment for Arbuckle, Maxwell, Princeton, Grimes, and Stonyford.*

support through efforts to create a district and assist with securing State or Federal funds for improving the buildings, streetscapes, and public areas within the community.

Action CC 2-F: *Assist the Maxwell Parks and Recreation District in updating their development impact fees to provide additional funding for the expansion of parks facilities in Maxwell.*

Action CC 2-G: *If the Sites Reservoir project is approved, develop a Maxwell Community Plan to capitalize on economic development opportunities, including lodging, shopping, dining, and other tourism uses, created by increased visitors and County residents using Sites Reservoir. The Maxwell Community Plan shall emphasize aesthetic and design standards that recognize the historic character of Maxwell and importance of the area as the gateway to recreation opportunities in the western County.*

Chapter 6. Economic Development Element

Action ED 2-A: *Apply for Community Development Block Grant/Technical Assistance and Economic Development Allocation funds and coordinate the preparation of a business incentive program, sign program, and development of marketing materials and a marketing strategy. Other programs should include preparation of economic development strategic and downtown revitalization plans for the communities of Arbuckle, Maxwell, Princeton, College City and Grimes.*

Action ED 2-C: *Assist businesses and interested parties in establishing Main Street Programs and business districts in established communities, particularly in Arbuckle and Maxwell.*

NOTICE OF PUBLIC HEARING:
FOR THE MAXWELL COMMUNITY PLAN

NOTICE IS HEREBY GIVEN THAT that the Colusa County Planning Commission will conduct a Public Hearing on Wednesday, October 1, 2025 beginning at 9:00 a.m. in the Board of Supervisors Chambers located at 546 Jay Street, Suite 108, Colusa, CA, to consider the following:

Public Hearing: The Planning Commission will hold a public hearing to consider the Maxwell Community Plan and whether to adopt a resolution that would recommend that the Board of Supervisors adopt an Ordinance approving the Maxwell Community Plan and General Rule Exemption (Section 15061(b)(3) pursuant to CEQA Guidelines, which provides that a project is exempt where it can be seen with certainty that there is no possibility of a significant effect. The adoption of the Maxwell Community Plan will not directly result in any development. All persons are invited to attend and be heard.

Project Description/Location: The Maxwell Community Plan is intended to respond to the challenges and opportunities presented by the future development of the Sites Reservoir Project by providing guidance, strategies, and implementation actions to help guide and shape the future of the Maxwell Community in accordance with the Colusa County General Plan specific to Sites and Maxwell areas.

If you have questions or concerns regarding this matter, or would like to submit comments, you may do so to the following: Secretary to the Planning Commission, 1213 Market Street, Colusa, CA (530)458-0480, or by e-mail at xfowler@countyofcolusaca.gov.

If you challenge the proposed project or environmental determination in court, you may be limited to raising only those issues you or someone else raised at the public hearing described in this notice, or in written correspondence delivered at, or prior to, the public hearing.

Dated: September 12, 2025

By: ORIGINAL SIGNED
Ann Nordyke, Clerk

09/19/2025 · CCPR

WILLIAMS PIONEER REVIEW: Please publish on
Friday, September 19, 2025
POSTED: At the Colusa Courthouse on Monday, September 15, 2025

NOTICE OF PUBLIC HEARING: FOR THE MAXWELL COMMUNITY PLAN

NOTICE IS HEREBY GIVEN THAT that the Colusa County Planning Commission will conduct a Public Hearing on Wednesday, **October 1, 2025 beginning at 9:00 a.m.** in the Board of Supervisors Chambers located at 546 Jay Street, Suite 108, Colusa, CA, to consider the following:

Public Hearing: The Planning Commission will hold a public hearing to consider the Maxwell Community Plan and whether to adopt a resolution that would recommend that the Board of Supervisors adopt an Ordinance approving the Maxwell Community Plan and General Rule Exemption (Section 15061(b)(3) pursuant to CEQA Guidelines, which provides that a project is exempt where it can be seen with certainty that there is no possibility of a significant effect. The adoption of the Maxwell Community Plan will not directly result in any development. All persons are invited to attend and be heard.

Project Description/Location: The Maxwell Community Plan is intended to respond to the challenges and opportunities presented by the future development of the Sites Reservoir Project by providing guidance, strategies, and implementation actions to help guide and shape the future of the Maxwell Community in accordance with the Colusa County General Plan specific to Sites and Maxwell areas.

If you have questions or concerns regarding this matter, or would like to submit comments, you may do so to the following: Secretary to the Planning Commission, 1213 Market Street, Colusa, CA (530)458-0480, or by e-mail at xfowler@countyofcolusaca.gov.

If you challenge the proposed project or environmental determination in court, you may be limited to raising only those issues you or someone else raised at the public hearing described in this notice, or in written correspondence delivered at, or prior to, the public hearing.

Dated: September 12, 2025

By: _____
Ann Nordyke, Clerk

NOTICE OF PUBLIC HEARING: FOR THE MAXWELL COMMUNITY PLAN

NOTICE IS HEREBY GIVEN THAT the Colusa County Board of Supervisors will conduct a Public Hearing on Tuesday, November 4, 2025 beginning at 9:30 a.m. in the Board of Supervisors Chambers located at 546 Jay Street, Suite 108, Colusa, CA, to consider the following:

Public Hearing: The Board of Supervisors will hold a public hearing to consider adopting a Resolution approving the Maxwell Community Plan and General Rule Exemption (Section 15061(b)(3) pursuant to CEQA Guidelines, which provides that a project is exempt where it can be seen with certainty that there is no possibility of a significant effect. The adoption of the Maxwell Community Plan will not directly result in any development. On October 1, 2025, the Colusa County Planning Commission adopted a Resolution recommending the approval of the Maxwell Community Plan and CEQA Exemption. All persons are invited to attend and be heard.

Project Description/Location: The Maxwell Community Plan is intended to respond to the challenges and opportunities presented by the future development of the Sites Reservoir Project by providing guidance, strategies, and implementation actions to help guide and shape the future of the Maxwell Community in accordance with the Colusa County General Plan specific to the Sites and Maxwell areas.

If you have questions or concerns regarding this matter, or would like to submit comments, you may do so to the following: Secretary to the Planning Commission, 1213 Market Street, Colusa, CA (530)458-0480, or by e-mail at xfowler@countyofcolusa.com.

If you challenge the proposed project or environmental determination in court, you may be limited to raising only those issues you or someone else raised at the public hearing described in this notice, or in written correspondence delivered at, or prior to, the public hearing.

Dated: October 15, 2025

By: ORIGINAL SIGNED
Patricia Rodriguez, Deputy Clerk **10/24/2025 · CCPR**

Colusa County

Agenda Request Form

Item ID#: 2025-75 **Agenda Date:** 11/4/2025 **Item 2**

COMMUNITY DEVELOPMENT DEPARTMENT

Public Hearing and Adoption of an Ordinance, read by title only, approving a Development Agreement with the Sites Project Authority for the development and operation of the Sites Reservoir Project.

Detailed Description/Background of Request
The Sites Reservoir Project, a proposed 1.3 - 1.5 million acre-foot off-stream reservoir, will be located approximately 10 miles west of the town of Maxwell, California, and will provide water storage and supply for the entities that pay to participate and receive benefits, including the County of Colusa. It will also provide public benefits, including environmental water supplies, recreation, and regional flood control benefits.

The proposed Development Agreement outlines County procedures and actions, purpose and applicability of the Agreement, best management practices, community benefits, assurances by both parties, impacts to existing and new County roads and crossing structures, default and general provisions.

To strengthen the public planning process, encourage private participation in comprehensive planning, and reduce the economic risk of development, the State of California Development Agreement Act authorizes the County to enter into binding development agreements establishing certain development rights in real property with persons having legal or equitable interests in such property.

ENVIRONMENTAL REVIEW:

The proposed Development Agreement anticipates a variety of later activities that may result in "projects" within the meaning of CEQA. As of the date of this Agreement, however, no such projects have been identified, explored, formulated, or proposed in any level of meaningful detail. For all of these reasons, environmental review of such projects is thus premature and not required by CEQA. The Parties shall conduct all appropriate environmental review, if necessary, at the time when such review is required, and before the approval or implementation of any project that may result from the activities anticipated in this Agreement. Responsibility for performing environmental review, including which entity will serve as the "lead agency," will be determined at the appropriate time and in the legally required manner.

The Sites Project Authority is the lead agency for the Sites Reservoir Project under CEQA, and the U.S. Department of Interior, Bureau of Reclamation is the lead agency under the National Environmental Policy Act (NEPA). Over the past several years, the

Authority has issued various environmental review documents for the Project pursuant to CEQA and NEPA, including a Revised Draft Environmental Impact Report/Supplemental Draft Environmental Impact Statement (RDEIR/SDEIS) on November 12, 2021, and a Final Environmental Impact Report/Environmental Impact Statement (Final EI/EIS) on November 2, 2023. The RDEIR/SDEIS and Final EIR/EIS include various Project alternatives, including two alternatives (Alternative 1 and 3) that include Project Facilities and potential mitigation elements involving placing lands in conservation easement within Colusa County. On November 17, 2023, the Authority certified the Final EIR/EIS and took various related actions, including approving Alternative 3 as the Project for implementation.

Therefore, the Authority and the County desire to see the Project advance in a manner that will achieve its objectives, address impacts to affected County roads, adhere to various Best Management Practices (BMPs) outlined in the Final EIR/EIS, and promote certain shared goals such as strengthening local workforce training and development, and contributing sales tax revenues to the local economy. Additionally, the Authority seeks, through mutual agreement with the County, to identify and mitigate negative impacts to the County that were not identified in the Final EIR/EIS that result from the construction and operation of the Project.

DEVELOPMENT AGREEMENT:

Section 44-1.100 of the County Code establishes the procedures and requirements for the adoption of a development agreement in compliance with Government Code Section 65864 et seq. A development agreement provides assurances to an applicant (the Authority) of a development project that, upon approval, the project may proceed in accordance with the conditions placed upon it by the review authority, as well as with existing policies, rules, and regulations. The proposed Development Agreement meets the findings required by Section 44-1.100.020 of the County Code.

The designated approving authority for a development agreement within the County of Colusa is the Board of Supervisors, with review and recommendation by the Planning Commission. Approval of a development agreement is required to be by ordinance. Additionally, the Sites Project Authority also has a Board of Directors that has the authority to approve a development agreement within its jurisdiction.

The Board of Supervisors' Development Agreement Ad Hoc Committee developed the proposed Development Agreement. Exhibit "A" is the Development Agreement Ordinance and the Development Agreement that has been crafted for the Sites Reservoir Project. As written, the Development Agreement includes standard development agreement language (i.e., definitions, legal recitals, specified agreement and assurance provisions, review, and default provisions) and specific obligations of the Authority (project developer) and the County. In exchange for the County's commitment to allow the project to be developed, the developer agrees to the following:

Commitment to implement Best Management Practices (BMPs) during Sites Reservoir

construction and operation (Section 2.5.1 Commitment)

Commitment to support and implement community benefit actions and to create policies and programs that support local workforce training and development, consistent with the Maxwell Community Plan (Section 2.6 Community Benefits)

Commitment to enter into Impact Alleviation Agreements with the Maxwell Unified School District, Maxwell Fire District, Maxwell Public Utilities District, Maxwell Park and Recreation District, Colusa County Sheriff, and Colusa County Public Works (Section 3.1.6 Impact Alleviation Agreements)

Funding commitment for the design, construction, and ownership transfer of the proposed Sites Lodoga Bridge project (Section 3.2 Impacts to County Roads and Crossing Structures and New Roads and Exhibit C)

Commitment to annual payments in lieu of taxes (PILT) for properties under the Authority's ownership or any lands purchased for the purpose of project mitigation (Section 3.3.14 Payment in Lieu of Taxes and Exhibit B)

Commitment to maximizing local taxes collected on behalf of the County (Section 3.3.16 Sales Tax/Office)

$600,000 funding commitment for County Fiscal Analyst position to handle internal accounting and Grant Writer for the implementation of the Maxwell Community Plan and other project-associated community benefit actions (Section 3.3.18 Impact Alleviation on County Administrative Services)

Commitment to funding the 100% design of a gateway entry park, as identified in the Maxwell Community Plan (Section 3.3.20 Maxwell Gateway Park Design)

Prior Board Action

The Board of Supervisors' Development Agreement Ad Hoc Committee developed the proposed Development Agreement. Exhibit "A" is the Development Agreement Ordinance and the Development Agreement that has been crafted for the Sites Reservoir Project.

Fiscal Impact/Funding Source

The proposed Development Agreement will result in fiscal benefits to the County because the Authority, at its sole cost and expense, will do the following:

Restore to as good or better condition all County roads and crossing structures impacted by the Project construction.

Improve local roads and crossing structures identified in Exhibit C (Local Roads and Crossing Structures) to County standards, including improvements and repairs, and

reconstruction necessary to meet the "good or better condition."

Build new roads needed for Project construction.

Design up to a 3-acre gateway entry park consistent with the Maxwell Community Plan.

Pay all applicable processing and inspection fees for permits and approval required for the Project, as listed in Exhibit A (Permit Requirements Matrix).

Pay all applicable Encroachment permit fees.

Reimburse the County for all covered expenses associated with the project.

Pay all applicable Impact Fees, which will be calculated at the time of the County's issuance of the relevant permits and assessed based on values existing at that time.

Make annual payments in lieu of taxes (PILT) for properties under the Authority's ownership as shown in Exhibit B, plus any Authority-owned lands purchased for the purpose of mitigating environmental effects, equivalent to the amount of property taxes that the County would have received based on assessment.

Make annual lump sum payments for seven years, totaling $600,000, for grant assistance and County financial analyst services, effective when the first construction contract is initiated following the start of Project Phase 3.

Additional fiscal benefits include:

11. Maximized local taxes collected due to the requirement that Project construction contractors shall participate in jobsite sub-permit reporting through the California Department of Tax and Fee Administration (CDTFA). All Project construction contractors, under contracts in excess of $1 million, providing services, labor, and materials, shall participate and designate a location within the County as the place of use of materials and or sale of fixtures used in the construction of the Project.

12. Explore the assignment of the USDA Rural Small Community Program Loan, not to exceed $450 million, terms and conditions to the County.

Fiscal Impact/Funding Source
The proposed Development Agreement will result in fiscal benefits to the County because the Authority, at its sole cost and expense, will do the following:

1. Restore to as good or better condition all County roads and crossing structures impacted by the Project construction.

2. Improve local roads and crossing structures identified in Exhibit C (Local Roads and Crossing Structures) to County standards, including improvements and repairs, and reconstruction necessary to meet the "good or better condition."

3. Build new roads needed for Project construction.

4. Design up to a 3-acre gateway entry park consistent with the Maxwell Community Plan.

5. Pay all applicable processing and inspection fees for permits and approval required for the Project, as listed in Exhibit A (Permit Requirements Matrix).

6. Pay all applicable Encroachment permit fees.

7. Reimburse the County for all covered expenses associated with the project.

8. Pay all applicable Impact Fees, which will be calculated at the time of the County's issuance of the relevant permits and assessed based on values existing at that time.

9. Make annual payments in lieu of taxes (PILT) for properties under the Authority's ownership as shown in Exhibit B, plus any Authority-owned lands purchased for the purpose of mitigating environmental effects, equivalent to the amount of property taxes that the County would have received based on assessment.

10. Make annual lump sum payments for seven years, totaling $600,000, for grant assistance and County financial analyst services, effective when the first construction contract is initiated following the start of Project Phase 3.

Additional fiscal benefits include:

11. Maximized local taxes collected due to the requirement that Project construction contractors shall participate in jobsite sub-permit reporting through the California Department of Tax and Fee Administration (CDTFA). All Project construction contractors, under contracts in excess of $1 million, providing services, labor, and materials, shall participate and designate a location within the County as the place of use of materials and or sale of fixtures used in the construction of the Project.

12. Explore the assignment of the USDA Rural Small Community Program Loan, not to exceed $450 million, terms and conditions to the County.

Action for the Clerk
A final version of the Development Agreement shall be provided to the Clerk of the Board of Supervisors within ten (10) days after the effective date of the Development Agreement, and the Clerk shall have the Development Agreement recorded with the County Recorder.

A copy of the recorded Development Agreement shall be provided to the Community Development Director for the administrative record and mailed to the Sites Project Authority, Attn: Jerry Brown, Executive Director.

The Ordinance shall be published as required and sent to code publishing.

Prior Board Action
The Board of Supervisors' Development Agreement Ad Hoc Committee developed the proposed Development Agreement. Exhibit "A" is the Development Agreement Ordinance and the Development Agreement that has been crafted for the Sites Reservoir Project.

Attachments:
1. Ordinance Approving Development Agreement with Sites Project Authority
2. Exhibit A - Development Agreement_9.25.2025
3. Proof of Publication
4. PC Resolution No.25-07 Recommending the Board adopt an Ordinance

ORDINANCE NO.

AN UNCODIFIED ORDINANCE OF THE COLUSA COUNTY BOARD OF SUPERVISORS APPROVING A DEVELOPMENT AGREEMENT BETWEEN THE COUNTY OF COLUSA AND THE SITES PROJECT AUTHORITY

WHEREAS, the Sites Project Authority ("Applicant") submitted planning applications to the Colusa County Community Development Department for the construction, operation, maintenance, and decommissioning of the Sites Reservoir Project ("Project"), a 1.3 – 1.5 million acre-foot off-stream reservoir, located approximately 10 miles west of the unincorporated town of Maxwell, within Colusa County;

WHEREAS, the County of Colusa ("County"), and the Applicant, negotiated a development agreement for the Project ("Development Agreement"), the substantive form of which is attached as Exhibit A;

WHEREAS, the Development Agreement establishes the rights and obligations of the Applicant and the County relating to the development of the Project, secures Applicant's vested right to develop the Project in accordance with the terms of the Development Agreement, and establishes community and public benefits that the Project will provide;

WHEREAS, on October 1, 2025, the Colusa County Planning Commission held a duly noticed public hearing where it received oral and written testimony regarding the Development Agreement in consideration of making a recommendation to the Board of Supervisors regarding the approval or disapproval of the Development Agreement;

WHEREAS, at the conclusion of the hearing on October 1, 2025, the Colusa County Planning Commission adopted Resolution No. 25-07 recommending the Colusa County Board of Supervisors approve the Development Agreement and adopt this ordinance;

WHEREAS, the Sites Project Authority is considered a Lead Agency under the California Environmental Quality Act (CEQA) and the U.S. Department of Interior, Bureau of Reclamation is the lead agency under the National Environmental Policy Act (NEPA) for this Project and has determined that an Environmental Impact Report (EIR) /Environmental Impact Statement (EIS) was necessary to fully review and consider all potentially significant impacts for the Project;

WHEREAS, the Sites Project Authority issued a Revised Draft Environmental Impact Report/Supplemental Draft Environmental Impact Statement (RDEIR/SDEIS) on November 12, 2021, and a Final Environmental Impact Report/Environmental Impact Statement (Final EI/EIS) on November 2, 2023. The RDEIR/SDEIS and Final EIR/EIS include various Project alternatives, including two alternatives (Alternative 1 and 3) that include Project Facilities and potential mitigation elements involving placing lands in conservation easement within Colusa County. On November 17, 2023, the Sites Project Authority certified the Final EIR/EIS and took various related actions, including approving Alternative 3 as the Project for implementation;

WHEREAS, the Authority and the County desire to see the Project advance in a manner that will achieve its objectives, address impacts to affected County roads, adhere to various Best

Management Practices (BMPs) outlined in the Final EIR/EIS, and promote certain shared goals such as strengthening local workforce training and development, and contributing sales tax revenues to the local economy. Additionally, the Authority seeks, through mutual agreement with the County, to identify and mitigate negative impacts to the County that were not identified in the Final EIR/EIS that result from the construction and operation of the Project;

WHEREAS, on November 4, 2025, the Colusa County Board of Supervisors held a duly noticed public hearing where it fully reviewed and considered the Planning Staff's report on the Project, all public testimony, all other written and oral testimony, and the totality of the public record for the Project. Additionally, it considered the Planning Commission's recommendation, and concluded the public hearing prior to adoption of this Ordinance; and

WHEREAS, the Colusa County Board of Supervisors is the decision-making body for the County of Colusa and has the authority to approve the proposed Development Agreement.

NOW, THEREFORE, THE BOARD OF SUPERVISOR FOR THE COUNTY OF COLUSA ORDAINS AS FOLLOWS:

SECTION 1

The Development Agreement is consistent with the General Plan, the County Code, and any other applicable plans or regulations.

SECTION 2

The Development Agreement is in conformance with the public convenience and general welfare of persons residing in the immediate area and will not be detrimental or injurious to property or persons in the general neighborhood or to the general welfare of the residents of the County as a whole.

SECTION 3

The Development Agreement advances the public convenience and general welfare of persons residing in the immediate area and residents within the County as a whole. Development of the Project will provide much-needed, cost-competitive clean energy and resiliency to the State of California and contribute significantly to the economy of the County, including through the generation of property and sales tax, payments in lieu of lost tax revenue, and through Developer's payment of community benefit fees for the life of the Project. Development of the Project will also support the economy by investing in the local community, creating local construction jobs, and increasing tax and fee revenue to the County.

SECTION 4

The Development Agreement will promote the orderly development of property or the preservation of property values.

SECTION 5

The Development Agreement advances the development of the Sites Reservoir Project, a 1.3 – 1.5 million acre-foot off-stream reservoir, located approximately 10 miles west of the unincorporated town of Maxwell, within Colusa County. The Project, in accordance with the terms of the Development Agreement, establishes community benefits and public benefits that the Project will provide to the County.

SECTION 6

The Development Agreement specifies the duration of the agreement, the permitted uses of the property, the density or intensity of use, the maximum height and size of proposed buildings (including through vesting the Applicant's rights to develop the Project in accordance with applicable laws), and provisions for reservation or dedication of land for public purposes.

SECTION 7

The development agreement is consistent with the requirements of State law, including Government Code Sections 65864 through 65869.5.

SECTION 8

The Development Agreement is approved by the County of Colusa through this Ordinance and the action of the Board of Supervisors, in the substantive form of which is attached as Exhibit A, and the Board of Supervisors authorizes the Chair of the Board of Supervisors to execute the approved Development Agreement on behalf of the County of Colusa, as soon as this Ordinance becomes effective.

SECTION 9

This Ordinance is adopted in accordance with the law and more specifically under California Government Code Section 65868 et seq. ("Development Agreement Statute") and Section 44-1.100 of the Colusa County Code ("Development Agreement Ordinance"), both of which provide for the ability of the County to adopt development agreements and set forth procedures and requirements for the consideration of those agreements.

SECTION 10

The Board of Supervisors finds that the Development Agreement complies with the requirements of the Development Agreement Ordinance and the Development Agreement Statute.

SECTION 11

A final version of the Development Agreement shall be provided to the Clerk of the Board of Supervisors within ten (10) days after the effective date of the Development Agreement and the Clerk shall have the Development Agreement recorded with the County Recorder.

SECTION 12

The Board of Supervisors authorizes all necessary subsequent action to be taken by County officials consistent with this Ordinance.

SECTION 13

This ordinance shall become effective thirty (30) days after its passage. It shall be published once with the names of the members of the Board of Supervisors voting for and against the ordinance in a newspaper of general circulation published in the County of Colusa, State of California, within fifteen (15) days after its passage

Passed and adopted by the Board of Supervisors of the County of Colusa, State of California, on the 4th day of November 2025, by the following roll call vote:

AYES:

NOES:

ABSENT:

_____
Daurice K. Smith, Chair,
Colusa County Board of Supervisors

ATTEST: Marcos Kropf, Interim
Clerk to the Board of Supervisors

_____
Patricia Rodriguez, Deputy Clerk

APPROVED AS TO FORM

_____
Richard Stout, County Counsel

DEVELOPMENT AGREEMENT

by and between

THE COUNTY OF COLUSA

and

Sites Project Authority

dated as of

_____, 2025

DEVELOPMENT AGREEMENT

TABLE OF CONTENTS

Page

RECITALS 1

AGREEMENT 3

1. DEFINITIONS 3

2. PURPOSE AND INTENT; BEST MANAGEMENT PRACTICES 7

2.1 County Procedures and Actions 7
2.1.1 County Planning Commission Action 7
2.1.2 Board of Supervisors Action 7
2.2 State Enabling Legislation 7
2.3 Purpose of this Agreement 7
2.3.1 Public Benefits 7
2.3.2 Authority Objectives 7
2.3.3 Mutual Objectives 8
2.4 Applicability of the Agreement 8
2.5 Best Management Practices. 8
2.5.1 Commitment .....
2.5.2 Applicable BMPs 9
2.5.3 Limitations. 9
2.5.3.1 Changes to BMPs 9
2.5.3.2 Landowner Concerns 9
2.5.3.3 Material Change to the Covered BMPs 10
2.5.3.4 Authority 10
2.6 Community Benefits 10

3. AGREEMENT AND ASSURANCES 10

3.1 Agreement and Assurance on the Part of the Authority 10
3.1.1 Project Development 11
3.1.2 Agreement for Design, Construction, Operation and Maintenance 11
3.1.3 Intentionally Deleted 11
3.1.4 Wind-Up Following Termination Prior to Completion 11
3.1.5 Tax Forms 11
3.1.6 Impact Alleviation Agreements. Maxwell Unified School District; Maxwell Fire District, Maxwell Public Utilities District, Maxwell Parks and Recreation District, Colusa County Sheriff, Colusa County Public Works 11
3.1.7 Local Hiring 12
3.2 Impacts to County Roads and Crossing Structures and New Roads. 12

3.2.1 Road and Crossing Structure Repairs 12
3.2.2 Road and Crossing Structure Improvements 12
3.2.3 New Roads 12
3.2.4 Permits, Cooperation and Implementation. 13
3.2.5 Design and Improvement Standards 14
3.2.6 Condition Assessment 15
3.2.7 Corrective Action 15
3.2.8 Reimbursement Procedure 16
3.3 Agreement and Assurances on the part of the County 16
3.3.1 Entitlement to Develop 16
3.3.2 Consistency in Applicable Rules 16
3.3.3 No Warranty of Completion 17
3.3.4 Changes in Applicable Rules 17
3.3.4.1 Nonapplication of Changes in Applicable Rules 17
3.3.4.2 Changes in Uniform Codes 17
3.3.4.3 Changes Mandated by Federal or State Law 17
3.3.5 Subsequent Development Review 17
3.3.6 Intentionally Deleted. 18
3.3.7 Effective Development Standards 18
3.3.8 Use of Property 18
3.3.9 Moratoria or Interim Control Ordinances 18
3.3.10 Infrastructure Financing 18
3.3.11 Impact Fees 18
3.3.12 Processing Fees 18
3.3.13 Timeframes and Staffing for Processing and Review 19
3.3.14 Payment in Lieu of Taxes 19
3.3.15 Ownership of Project; Prioritization of Local Agencies 20
3.3.16 Sales Tax / Office 20
3.3.17 [NOTE: COLUSA ONLY] [Memorandum of Understanding 20

4. DEFAULT PROVISIONS 21

4.1 Default By the Authority 21
4.1.1 Default 21
4.1.2 Notice of Default 21
4.1.3 Failure to Cure Default Procedure 22
4.1.4 Action by Board of Supervisors 22
4.1.5 Dispute Resolution 22
4.1.6 Termination or Modification of Agreement 22
4.2 Default By The County 22
4.2.1 Default 22
4.2.2 Notice of Default 22
4.2.3 Termination or Modification of Agreement 23
4.3 No Monetary Damages 23

5. GENERAL PROVISIONS 23

5.1 Effective Date 23
5.2 Term 23
5.3 Enforced Delay; Extension of Time of Performance 23
5.4 CEQA Compliance 24
5.5 Dispute Resolution 24
5.5.1 Informal Dispute Resolution Before Mediation 24
5.5.2 Mediation. 25
5.5.3 Conduct of Mediation. 25
5.6 Applicable Law 26
5.7 Amendments 26
5.8 Assignment 26
5.9 Covenants 26
5.10 Relationship of the Parties 26
5.11 Notices 26
5.12 Recordation 27
5.13 Constructive Notice and Acceptance 27
5.14 Successors And Assigns 27
5.15 Severability 27
5.16 Time of the Essence 27
5.17 Waiver 27
5.18 No Third Party Beneficiaries 28
5.19 Entire Agreement 28
5.20 Legal Advice, Neutral Interpretation, Headings, Table of Contents, and Index 28
5.21 Discretion to Encumber 28
5.22 Expedited Processing 28
5.23 Counterparts; Electronic Execution 28
5.24 Controlling Law Venue 28

EXHIBITS

EXHIBIT A Permit Requirement Matrix
EXHIBIT B Project Specific Information and Example of Calculation for Payment in Lieu of Taxes
ANNEX 1 Project Site Map
EXHIBIT C Local Roads and Crossing Structures - Designations
EXHIBIT D New and Improved Local Roads and Crossing Structures – Design, Construction, Maintenance, and County Acceptance Minimum Requirements

DEVELOPMENT AGREEMENT

This Development Agreement ("Agreement"), dated as of _____, 202[5], is entered into by and between the COUNTY OF COLUSA ("County"), and Sites Project Authority (the "Authority") (individually, a "Party"; collectively, the "Parties").

RECITALS

WHEREAS, the County is a political subdivision of the State of California; and

WHEREAS, the Authority is a joint powers agency created under California Government Code Sections 6500 et seq., was formed pursuant to the Sites Project Authority Joint Exercise of Powers Agreement, as such agreement may be amended and restated from time to time, and pursuant to which the formation of the Sites Reservoir Committee was authorized (the "JPA Agreement"), and is governed by Phase 3, 4, 5 Bylaws of the Sites Project Authority (the "Authority Bylaws"); and

WHEREAS, California Government Code Section 6508 provides that a joint powers agency shall possess and may exercise the common powers of its member agencies as specified in the joint powers agreement; and

WHEREAS, the Authority was formed in 2010 by its member agencies, all of whom are public agencies within the Sacramento River Watershed, for the following purpose: to design, permit, finance, construct, and ultimately own and operate the Sites Reservoir Project (the "Project"), a proposed 1.3-1.5 million acre-foot off-stream reservoir located approximately 10 miles west of the town of Maxwell, California. Once constructed, the Sites Reservoir Project will provide water storage and supply for the entities that pay to participate and receive benefits, including certain Authority members and other municipal entities and special districts (collectively, the "Participants"), as well as provide public benefits including environmental water supply, recreation, and regional flood control benefits; and

WHEREAS, the Authority intends to enter into a certain Benefits and Obligations Contract (the "Benefits and Obligations Contract") with the Participants and the State of California Department of Water Resources, which will detail, among other things, the obligations of the Authority to build and maintain the Project and obligations to restore the Project site in the event the Project is not completed; and

WHEREAS, certain facilities which will be used for the Project are located within the County, including facilities, related to the Tehama-Colusa and Corning Canals, Funks Reservoir and Associated Works which serve the irrigation needs of the water districts within the Sacramento Canals Unit of the Central Valley Project; and]

WHEREAS, the operation of the Project will significantly rely on utilization of existing conveyance facilities that are located within the County to divert water from the Sacramento River for storage into the reservoir and for releases along with impeding natural flow within the Funks Creek and Stone Corral Creek; and

WHEREAS, in order to construct and operate the Project, the Authority will need the assistance, permission, and cooperation of the County on a number of activities including planning, design, permitting, construction of the new infrastructure and facility improvements, the potential mitigation of certain project environmental effects which may require the placement of lands within the County in conservation easement, and integration of facilities in the County, as well as access to certain services provided in the County including public safety services in the area, including in recreational areas, in or directly adjacent to the Project; and

WHEREAS, the County and the Authority recognize that development of the Project within the County is anticipated to provide much-needed new water supplies in the State of California and should contribute significantly to the economy of the County, including through the measures, programs, and projects developed by the Local Community Working Group, and by establishing goals, incentives and preferences for local hiring and purchasing as described in Section 2.6 of this Agreement; and

WHEREAS, the County and the Authority recognize that certain Memorandum of Understanding between Colusa County and the Sites Project Authority Regarding Area of Origin Water Rights Claims to Funks and Stone Corral Creeks, and Related Matters, dated as of November 22, 2021; and

WHEREAS, the Authority is the lead agency for the Project under the California Environmental Quality Act (Pub. Res. Code § 21000, *et seq*.)("CEQA") and the U.S. Department of the Interior, Bureau of Reclamation ("Reclamation") is the lead agency under the National Environmental Policy Act ("NEPA"); and

WHEREAS, over the past several years, the Authority has issued various environmental review documents for the Project pursuant to CEQA and NEPA, including a Revised Draft Environmental Impact Report/Supplemental Draft Environmental Impact Statement ("RDEIR/SDEIS") on November 12, 2021, and a Final Environmental Impact Report/Environmental Impact Statement ("Final EIR/EIS") on November 2, 2023; and

WHEREAS, the RDEIR/SDEIS and Final EIR/EIS include various Project alternatives, [including two alternatives (Alternatives 1 and 3) that include Project Facilities and potentially mitigation elements involving placing lands in conservation easement within Colusa County; and

WHEREAS, on November 17, 2023, the Authority certified the Final EIR/EIS and took various related actions, including approving Alternative 3 (as defined for approval in findings adopted by Authority) as the Project for implementation; and

WHEREAS, the Parties desire to see the Project advance in a manner that will achieve its objectives, address impacts to affected County roads, adhere to various Best Management Practices ("BMPs") set forth in the Final EIR/EIS, and promote certain shared goals such as strengthening local workforce training and development, and contributing sales tax revenues to the local economy; and

WHEREAS, the Authority also seeks, through mutual agreement of the Parties, to identify and mitigate negative impacts to County not identified in the Final EIR/EIS that result from the construction and operation of the Project.

AGREEMENT:

NOW, THEREFORE, pursuant to the authority contained in the Development Agreement Act, as it applies to the County, and in consideration of the premises and mutual promises and covenants herein contained and other valuable consideration the receipt and adequacy of which the Parties hereby acknowledge, the Parties agree as follows:

1. DEFINITIONS.

For all purposes of this Agreement, except as otherwise expressly provided or unless the context requires otherwise:

"Agreement" has the meaning given in the introductory paragraph.

"Applicable Rules" means the rules, regulations, ordinances, and officially adopted policies of the County in force as of the Effective Date of this Agreement that are generally applicable to all or some properties within the County.

"Authority" has the meaning given in the introductory paragraph.

"Authority Bylaws" has the meaning given in the recitals to this Agreement.

"Benefits and Obligations Contract" has the meaning given in the recitals to this Agreement.

"BMP" has the meaning given in the recitals to this Agreement.

"CDTFA" has the meaning given in Section 3.1.5.

"CEQA" has the meaning given in the recitals to this Agreement.

"Construction Workforce Policy" means a policy to be adopted by the Authority in consultation with the County and the rest of the Authority Board members.

"County" has the meaning given in the introductory paragraph.

"County Agency" means each and every agency, department, board, commission, authority, employee, and/or official acting under the authority of the County, including without limitation, the County Board of Supervisors and the Planning Commission.

"County Board of Supervisors" means the Board of Supervisors of the County and the legislative body of the County pursuant to Section 25000 of the California Government Code.

"Covered BMPs" has the meaning given in Section 2.5.2.

"Covered Expenses" means (i) payroll costs for staff in the direct employ of the County including salaries and wages (at the hourly wage rate adopted by resolution of the Board of Supervisors), under schedules of job classifications agreed upon by the Authority and the County in advance of such performance, plus the cost of fringe benefits which shall include social security contributions, unemployment, excise and payroll taxes, workers' compensation, health and retirement benefits, bonuses, sick leave, vacation, and holiday pay applicable thereto incurred in the performance of the County's obligations under this Agreement; (ii) consultant and legal costs for services specifically related to this Agreement, including time spent in development and negotiation of this Agreement by County Counsel; (iii) general administrative costs and supplemental costs, including the proportion of necessary transportation, travel, and subsistence expenses of the County's employees incurred in discharge of duties connected with the County's obligations under this Agreement; (iv) all actual and necessary County time reasonably spent in connection with the encroachment permit, (v) all costs and expenses incurred in connection with seeking and entering into agreements regarding permits and approvals in accordance with Section 3.2.4, and (vi) other costs incurred in the performance of the County's obligations under this Agreement to the extent approved in writing by the Authority. Covered Expenses specifically exclude the Excluded Expenses.

"Development Agreement Act" means Article 2.5 of Chapter 4 of Division 1 of Title 7 (Sections 65864 through 65869.5) of the California Government Code.

"Discretionary Action" means an action that requires the exercise of judgment, deliberation or a decision on the part of the County and/or any County Agency, in the process of approving or disapproving a particular activity, as distinguished from an activity that merely requires the County and/or any County Agency, to determine whether there has been compliance with statutes, ordinances, or regulations.

"Effective Date" means the date on which this Agreement shall be effective in accordance with Section 5.1 hereof.

"ESAL" is Equivalent Single Axle Load and has the meaning given in Section 3.2.6.

"Excluded Expenses" means (i) overhead, mark-up or other general expense costs of any kind not specifically and expressly included in the definition of Covered Expenses, (ii) any costs related to the County's general involvement in the Project as a member of the Authority, a member of the Reservoir Committee, or as an investor in the Project, including payroll costs and other compensation of the County's officers, executives, general managers, estimators, attorneys, auditors, accountants, purchasing and contracting agents, expediters, timekeepers, clerks, and other personnel employed by the County whether at the site or in the County's offices for general administration of the County's work related to the Project, and (iii) expenses of the County's principal and branch offices.

"Fees" means Impact Fees, Processing Fees and any other fees or charges adopted by ordinance of the Board of Supervisors and collected by County.

"Final EIR/EIS" has the meaning given in the recitals to this Agreement.

"Impact Fees" has the meaning given in Section 3.3.11.

"Improved Local Roads and Crossing Structures" has the meaning given in Section 3.2.2.

"JPA Agreement" has the meaning given in the recitals to this Agreement.

"Land Use Approvals" means those Discretionary Actions to be taken by the County authorizing the Project. Land Use Approvals also include any subsequent Discretionary Actions that are necessary for implementation of the Project.

"Local Community Working Group" means the group organized by the Authority to provide input and feedback to the Authority to help inform Project planning and development activities. The Local Community Working Group generally consists of participating public agencies in the Project Area, labor, trade and business associations, local, state and federal elected officials and staff and other members of the ~~communities~~communities' potential affected by the Project.

"Local Area" means the Project Area plus Butte, Placer, Sacramento, Shasta, Sutter, Tehama, and Yuba counties.

"Local Roads and Crossing Structures" has the meaning given in Section 3.2.4.2.

"Local Roads and Crossing Structures for Repair" has the meaning given in Section 3.2.1.

"Maxwell Community Plan" means the planning activities being undertaken by Colusa County to evaluate and define the economic development opportunities associated with the Project and establish changes to land use designations or County codes, ordinances, or regulations that will be necessary to implement the adopted plan for the Maxwell community area.

"Ministerial Permits and Approvals" means the permits, approvals, plans, inspections, certificates, documents, licenses, and all other actions, if any, required to be taken by the County and/or County Agency in order for a Project developer to implement, develop and construct the Project in accordance with the Final Approved EIR/EIS, including without limitation, building permits, foundation permits, public works permits, grading permits, stockpile permits, encroachment permits, and other similar permits and approvals that may be required. Ministerial Permits and Approvals shall not include any Discretionary Actions.

"New Local Roads and Crossing Structures" has the meaning given in Section 3.2.3.

"NEPA" has the meaning given in the recitals to this Agreement.

"Parties" has the meaning given in the introductory paragraph.

"Party" has the meaning given in the introductory paragraph.

"Planning Commission" means the County Planning Commission and the planning agency of the County pursuant to Section 65867 of the California Government Code.

"Planning Director" means the individual designated by the Board of Supervisors as the Director of Planning or Planning Director or Director of Community Development, or Community Development Director for the applicable County.

"Processing Fees" means all processing fees and charges required by the County or any County Agency including, but not limited to, fees for land use applications, project permits, building applications, building permits, ministerial permits and approvals, grading permits, encroachment permits, tract or parcel maps, lot line adjustments, air right lots, street vacations, and certificates of occupancy that are necessary to accomplish the intent and purpose of this Agreement. Expressly exempted from Processing Fees are all Impact Fees.

"Project" has the meaning given in the recitals to this Agreement.

"Property" means the real property on which the Project will be located, and the pipeline route depicted on Annex 1 to Exhibit B (Project Specific Information).

"Project Area" means Colusa, Glenn, and Yolo counties.

"RDEIR/SDEIS" has the meaning given in the recitals to this Agreement.

"Reserved Powers" means the rights and authority excepted from this Agreement's restrictions on the County's police powers and which are instead reserved to the County. The Reserved Powers include the powers to enact regulations or take future Discretionary Actions after the Effective Date of this Agreement that may be in conflict with the Applicable Rules and Land Use Approvals, but: (1) are necessary to protect the public health and safety, and are generally applicable on a County-wide basis (except in the event of natural disasters as found by the Board of Supervisors such as floods, earthquakes and similar acts of God); (2) are amendments to Uniform Codes as defined in this Agreement regarding the construction, engineering and design standards for private and public improvements to be constructed on the Property; or (3) are necessary to comply with state or federal laws and regulations (whether enacted previous or subsequent to the Effective Date of this Agreement) as provided in Section 3.3.4.3. The Reserved Powers are limited by the authority of the Authority with respect to the siting, construction and operation of public utility above-ground storage facilities to the extent described in the Benefits and Obligations Contract, the JPA Agreement and the Authority Bylaws.

"Setting Date" means, with respect to any repair or improvement work, the date that is 60 days prior to the proposal due date for contractors to perform such work.

"Term" means the period of time for which this Agreement shall be effective in accordance with Section 5.2 hereof.

"Uniform Codes" means those building, electrical, mechanical, plumbing, fire and other similar regulations of a County-wide scope that are based on recommendations of a multi-state professional organization and become applicable throughout the County, such as, but not limited to, the Uniform Building Code, the Uniform Electrical Code, the Uniform Mechanical Code, Uniform Plumbing Code, or the Uniform Fire Code (including those amendments to the promulgated uniform codes that reflect local modification to implement the published recommendations of the multi -state organization and that are applicable County-wide).

2. PURPOSE AND INTENT; BEST MANAGEMENT PRACTICES.

2.1 County Procedures and Actions.

2.1.1 County Planning Commission Action. The County Planning Commission held a duly noticed public hearing on October 1, 2025, and recommended approval of this Agreement on October 1, 2025.

2.1.2 Board of Supervisors Action. The Board of Supervisors on _____, 20___, after conducting a duly-noticed public hearing, adopted Ordinance No. ____, to become effective on the thirty-first day after publication, approving this Agreement, and authorized the execution of this Agreement.

2.2 State Enabling Legislation. To strengthen the public planning process, encourage private participation in comprehensive planning, and reduce the economic risk of development, the Legislature of the State of California adopted the Development Agreement Act, which authorizes any County to enter into binding development agreements establishing certain development rights in real property with persons having legal or equitable interests in such property. Section 65864 of the Development Agreement Act expressly provides as follows:

> The Legislature finds and declares that:
>
> "(a) The lack of certainty in the approval of development projects can result in a waste of resources, escalate the cost of housing and other development to the consumer, and discourage investment in and a commitment to comprehensive planning, which would make maximum efficient utilization of resources at the least economic cost to the public.
>
> (b) Assurance to the applicant for a development project that upon approval of the project, the applicant may proceed with the project in accordance with existing policies, rules and regulations, and subject to conditions of approval will strengthen the public planning process, encourage private participation in comprehensive planning, and reduce the economic cost of development."

Notwithstanding the foregoing, to ensure that the County remains responsive and accountable to its residents while pursuing the benefits of development agreements contemplated by the Legislature, the County: (1) accepts restraints on its police powers contained in development agreements only to the extent and for the duration required to achieve the mutual objectives of the parties; and (2) to offset such restraints, seeks public benefits that go beyond those obtained by traditional County controls and conditions imposed on development project applications.

2.3 Purpose of this Agreement.

2.3.1 Public Benefits. This Agreement describes the relationship and mutual obligations of the Parties with regard to the Project and the Property within the County.

2.3.2 Authority Objectives. In accordance with the legislative findings set forth in the Development Agreement Act, and with full recognition of the County's policy

of judicious restraints on its police powers, the Authority wishes to obtain reasonable assurances that the Project may be developed in accordance with the Applicable Rules, Land Use Approvals, and with the terms of this Agreement and subject to the County's Reserved Powers. As provided by Section 3.1.1, the Authority anticipates making capital expenditures or causing capital expenditures to be made in reliance upon this Agreement. In the absence of this Agreement, the Authority would have no assurance that it can complete the Project for the uses and to the intensity of development set forth in this Agreement and the Land Use Approvals. This Agreement, therefore, is necessary to assure the Authority that in accordance with Government Code Section 65866, from and after the date of execution of this Agreement by all parties, the Project will not be (1) reduced or otherwise modified in intensity or use from what is set forth in the Authority's Final certified EIR/EIS, adopted Project and Project construction plans, as may be amended, and the County's Land Use Approvals of the Project, (2) subjected to new rules, regulations, ordinances, or official policies or plans that are not adopted or approved pursuant to the County's Reserved Powers.

2.3.3 Mutual Objectives. Development of the Project in accordance with this Agreement will provide for the orderly development of the Property. Moreover, a development agreement for the Project will eliminate uncertainty in planning for and securing orderly development of the Property, assure attainment of maximum efficient resource utilization within the County at the least economic cost to its citizens, and otherwise achieve the goals and purposes for which the Development Agreement Act was enacted. The Parties believe that such orderly development of the Project will provide public benefits, as described in Section 2.6, to the County under the provisions and conditions of this Agreement. Additionally, although development of the Project in accordance with this Agreement will restrain the County's land use or other relevant police powers, this Agreement provides the County with sufficient reserved powers during the term hereof to remain responsible and accountable to its residents. In exchange for these and other benefits to the County, the Authority will receive assurance that the Project may be developed during the term of this Agreement in accordance with the Applicable Rules, Land Use Approvals, and Reserved Powers, subject to the terms and conditions of this Agreement; that the County will expeditiously process the Land Use Approvals, any Discretionary Actions, any Ministerial Permits and Approvals, and any other approvals or actions required for the Project; and that if requested by the Authority, the County will affirmatively cooperate in supporting the Project, including written notification to State and Federal Agencies that the Project is locally supported by the community.

2.4 Applicability of the Agreement. This Agreement does not: (1) grant density or intensity in excess of that otherwise established in the Land Use Approvals; (2) eliminate future Discretionary Actions relating to the Project if applications requiring such Discretionary Action are initiated and submitted by the Authority or its successors after the Effective Date of this Agreement; (3) guarantee that the Authority will receive any profits from the Project; or (4) in and of itself, amend the County's [General Plan]. This Agreement has a fixed Term.

2.5 Best Management Practices.

2.5.1 Commitment. To address County's concerns with matters of Project implementation that are addressed in the BMPs adopted by the Authority, the Authority

commits to fully and faithfully implement the Covered BMPs (as defined below) in connection with work occurring within the County. This commitment is limited in certain respects, as expressly set forth herein.

2.5.2 Applicable BMPs. The Parties agree that the BMPs with significant potential to apply to work occurring within Colusa County ("Covered BMPs") are: BMP 10 (Salvage, Stockpiling, and Replacement of Topsoil and Preparation of a Topsoil Storage and Handling Plan); BMP 15 (Performance of Site-Specific Drainage Evaluations, Design, and Implementation); BMP 16 (Development and Implementation of a Construction Equipment, Truck, and Traffic Management Plan); BMP 22 (Development and Implementation of a Construction Noise Abatement Plan); and BMP 28 (Preparation and Implementation of Fugitive Dust Control Plans); all as may be revised from time to time in accordance with Section 2.5.3 of this Agreement.

Certain other BMPs are expected to be implemented, as appropriate, by terms and conditions included in ministerial County permits issued to the Authority or its contractor(s) and are not specifically designated as "Covered BMPs". Such BMPs include: BMP 1 (Conformance with Applicable Design Standards and Building Codes); BMP 3 (Completion of Preconstruction Geotechnical Evaluations and Data Reports); and BMP 6 (Decommissioning of Water Wells).

2.5.3 Limitations.

2.5.3.1 Changes to BMPs. The Parties recognize that the Authority retains its legal authority to consider and approve changes to all BMPs, including the Covered BMPs, before and during Project implementation. In connection with contemplated material changes to the Covered BMPs, the Authority will do at least the following:

(i) Provide at least 30 days prior written notice to the County of its intent to amend, rescind, or otherwise modify the BMP. Such notice shall describe the change(s) under consideration and the reasons for considering the change(s);

(ii) Consider in good faith any written comments submitted by the County within the 30-day period;

(iii) If requested by the County within the 30-day period, convene an in-person meeting attended by Authority's Executive Director, Authority's Board Chair, or both, to discuss in good faith County questions, concerns, or other matters of interest with respect to the change(s) under consideration prior to taking action thereon; and

(iv) Ensure that the County's concerns are presented to the Board of Directors prior to any action on the proposed change(s).

2.5.3.2 Landowner Concerns. If a private landowner requests that the Authority refrain from implementing a Covered BMP (in whole or part) on its property, the Authority will notify the County. If the County so requests within a reasonable timeframe (at least seven calendar days after notice unless circumstances require a shorter period), the Authority will confer with the County regarding any concerns or objections. The Parties agree that if a private landowner refuses to provide the Authority with permission or other rights

necessary to implement a Covered BMP (in whole or part) and, after the County and Authority have conferred on the issue or the County has declined to confer on the issue, the Authority cannot implement the Covered BMP as a result, no breach of this Agreement shall occur.

2.5.3.3 Material Change to the Covered BMPs. The County and the Authority will meet and confer prior to the start of construction of the Sites Reservoir to mutually agree, in writing, on what constitutes a material change to the Covered BMPs.

2.5.3.4 Authority. This Agreement does not limit or otherwise modify the Authority's sole authority to revise or rescind all BMPs, including the Covered BMPs. Similarly, this Agreement does not limit or in any way affect the legal remedies available to the County if the Authority revises or rescinds a BMP in a manner that County may contend fails to meet applicable legal requirements, including but not limited to CEQA.

2.6 Community Benefits. On an ongoing basis from the execution of this Agreement through Project construction, the Parties agree to cooperate in good faith to identify potential community benefit measures, programs or projects that could be implemented during Project construction or operation. It is understood that the Authority has formed a Local Community Working Group that represents community members across all areas affected by the Project. It is through this venue that potential community benefit measures, programs, and projects proposed by any parties are to be considered and evaluated. Also, it is understood that the Project is being developed according to the beneficiary pays principle, meaning the party that derives benefit from the Project will pay for such benefit. Further, the Authority agrees to support and implement community benefit actions and create policies and programs that support local workforce training and development consistent with the Construction Workforce Policy and the [Maxwell Community Plan].

The Authority agrees to cooperate and identify and implement programs and projects in the Local Area, including those within the jurisdiction of the County Board of Supervisors and within the jurisdiction of cities, schools, and special districts within the County, including within the affected communities within the unincorporated areas of the County, that satisfy the Authority's obligations with respect to air quality under mitigation measures EJ-1 (as stipulated under the Authority's MOU for construction with Certain Local Area County Air Pollution Control Districts) and EJ-2, and GHG-1.1 described in the CEQA approval. The Authority will work with the Local Area to implement these measures in a manner and in locations that coordinates the Local Area needs' with those of the Project, to the extent feasible.

2.6.1 The Parties recognize and agree a future amendment to this Agreement may be an appropriate means of ensuring the provision of community benefits in connection with the Project. Nothing in this Agreement requires either Party to enter into a development agreement or otherwise limits the Parties' respective authority regarding such matters.

3. AGREEMENT AND ASSURANCES.

3.1 Agreement and Assurance on the Part of the Authority. In consideration for the Authority entering into this Agreement, and as an inducement for the Authority to obligate itself

to carry out the covenants and conditions in this Agreement and effectuate the promises, purposes, and intentions in this Agreement, the County hereby agrees as follows:

3.1.1 Project Development. Subject to compliance with all applicable laws, Land Use Approvals, other governmental approvals, the terms of the Benefits and Obligations Contract and the terms and conditions of this Agreement, the Authority agrees to use commercially reasonable efforts to construct and complete the Project in substantial conformance with the approved design documents.

3.1.2 Agreement for Design, Construction, Operation and Maintenance and Ownership Transfer. The Authority and the County shall negotiate in good faith and endeavor to enter into an agreement for the design, construction and operation and maintenance for any New County Roads and Crossing Structure as described in Exhibit C (Local Roads and Crossing Structures), including, for the avoidance of doubt, the Sites-Ladoga Bridge which is to be constructed as part of the Project and transferred to the County upon completion of the bridge. All agreements between the Parties for such improvements shall be in writing. In addition, this Agreement will address the disposition of existing County property rights for the County roads that are being relocated with the new roads as applicable.

3.1.3 Intentionally Deleted.

3.1.4 Wind-Up Following Termination Prior to Completion. To the extent described in the Benefits and Obligations Contract, in the event that the Benefits and Obligations Contracted is terminated prior to completion of the Project, the Authority shall wind-up the Project in the manner described in Section 11.1 (Termination Prior to Completion of the Project) of the Benefits and Obligations Contract, including by appointing a winding-up agent who will prepare a plan for mitigating or remediating any hazardous or unsafe conditions located on the Project site that are a direct result of the construction of the Project.

3.1.5 Tax Forms. The Authority shall complete and submit appropriate State forms for sales tax revenue required by California Department of Tax and Fee Administration ("CDTFA").

3.1.6 Impact Alleviation Agreements. The Authority shall use its best efforts to enter into impact alleviation agreements ("Impact Alleviation Agreements") with the following parties:

1. Maxwell Unified School District ("School District") regarding concerns expressed by the School District in the areas of 1) removal of houses and parcels from the School District boundaries, 2) possible long term impacts on School District facilities due to changes in school enrollment, 3) additional mitigation needs, 4) economic challenges due to prevailing wage jobs, and 5) any other concerns or issues raised by the School District;
2. Maxwell Fire District regarding concerns expressed by the Maxwell Fire District in relation to increased emergency response demands due to construction related incidents, temporary workforce, recreation activities and population growth;

3. Maxwell Public Utilities District regarding concerns expressed by the Maxwell Public Utilities District in relation to increased strain on water and sewer systems from population increase; and
4. Colusa County Sheriff regarding concerns expressed by the Colusa County Sheriff in relation to service demand increases related to construction and workforce road use, temporary workforce domestic issues, and recreation operations.
5. Maxwell Parks and Recreation District regarding concerns expressed by the Maxwell Parks and Recreation District in relation to possible effects on facilities within their jurisdiction.
6. Colusa County Public Works Department regarding concerns expressed by the Colusa County Public Works Department in relation to facilities within their jurisdiction, not otherwise covered in this agreement.

3.1.7 Local Hiring. The Authority endeavors to establish a local annual hiring goal (covering the Project Area and the Local Area) for the project construction workforce and such goal shall be memorialized in an Authority adopted Construction Workforce Policy, or similar. Upon request by the County, the Authority shall report its actual hiring figures to the County on an annual basis.

3.2 Impacts to County Roads and Crossing Structures and New Roads.

3.2.1 Road and Crossing Structure Repairs. At its sole cost and expense, the Authority will restore to as good or better condition all County roads and crossing structures impacted by Project construction, including but not limited to roads and crossing structures applicable to the County that are shown to be repaired in the table "County Roads and Crossing Structures Work Related to Sites Reservoir Project" ("Local Roads and Crossing Structures for Repair") in Exhibit C (Local Roads and Crossing Structures). Such work may include repairs, reconstruction, and/or any other work necessary to meet the "as good or better condition" standard as described in Section 3.2.5 and Exhibit B (Project Specific Information) of this Agreement. Work pursuant to this Section is designed to address the impacts to Local Roads and Crossing Structures for Repair that are attributable to Project construction traffic and the Authority will not be required to address impacts to Local Roads and Crossing Structures for Repair that are attributable to traffic or other factors that are not related to the Project.

3.2.2 Road and Crossing Structure Improvements. At its sole cost and expense, the Authority will improve local roads and crossing structures to County standards described herein, roads and crossing structures applicable to the County that are shown to be improved in the table "County Roads and Crossing Structures Work Related to Sites Reservoir Project ("Improved Local Roads and Crossing Structures") in Exhibit C (Local Roads and Crossing Structures). Such work may include improvements and repairs, reconstruction, and/or any other work necessary to meet the "as good or better condition" standard for the Improved Local Roads and Crossing Structures upon completion of Project use. Work pursuant to this Section is designed to address the impacts to Improved Local Roadways and Crossing Structures that are attributable to Project construction traffic and the Authority will

not be required to address impacts to Improved Local Roads and Crossing Structures that are attributable to traffic or other factors that are not related to the Project.

3.2.3 New Roads and Crossing Structures. At its sole cost and expense, the Authority will build new roads needed for Project construction, including but not limited to new roads and crossing structures applicable to the County that are shown to be new in the attached table "County Roads Work Related to Sites Reservoir Project ("New Local Roads and Crossing Structures"). The Authority and the County will enter into a separate agreement specifying design and construction requirements, review and inspection rights and obligations and ownership transfer conditions for New Local Roads and Crossing Structures to become applicable County responsibility. Exhibit D is provided as minimum requirements of such agreement.

3.2.4 Permits, Cooperation and Implementation.

3.2.4.1 Without waiving any exemptions under the Government Code for facilities that are indispensable to the production, generation, storage, treatment, or transmission of water and exempt from local building and zoning ordinances, the Authority will apply for, obtain, and maintain, or cause to be applied for, obtained and maintained, all permits and approvals required for the Project listed in Exhibit A (Permit Requirement Matrix). The County shall cooperate with the Authority in its endeavors to obtain such permits and approvals and shall, at the request of the Authority, attempt with due diligence and in good faith to enter into binding agreements with any permitting entity having jurisdiction over any aspect of the Project to ensure the availability and approvals of such permits and all other approvals, if any. To the extent allowed by law, the Authority shall be a party to any such agreement, or a third party beneficiary thereof, entitled to enforce for its own benefit and on behalf of the County, or in its own name, the rights of the County or the Authority thereunder or the duties and obligations of the parties thereunder. The Authority shall reimburse the County for Covered Expenses incurred in connection with seeking and entering into any such agreement(s), provided that the Authority has requested such agreement(s).

3.2.4.2 Without limiting the general obligations in Section 3.2.4.1, the Authority will obtain an encroachment permit from the County prior to construction-related traffic on County roads. Each such permit will include provisions addressing County review of plans and specifications for Authority's use of Local Roads and Crossing Structures for Repair, Improved Local Roads and Crossing Structures and New Local Roads and Crossing Structures (together "Local Roads and Crossing Structures"); review and approval of placement of signage, traffic control, and construction schedule, which approval shall not be unreasonably withheld; and inspections of all work occurring within a County right of way. All Covered Expenses shall be reimbursed by Authority. The Authority shall, in a timely manner, provide the County with all documents, plans, fees, and other information necessary for the County to carry out its processing obligations pursuant to this Agreement.

3.2.4.3 Upon satisfactory completion by the Authority of all required preliminary actions and payment of appropriate Processing Fees, including any fee for processing this Agreement, the County shall:

1. commence and diligently and expeditiously process all required steps necessary for the implementation of this Agreement and any general plan update or zoning amendments necessary for development of the Project in accordance with the terms, provisions and conditions of this Agreement; and
2. to the extent County is reasonably able, cooperate with the Authority and provide or cause to be provided such limited information, documentation and administrative assistance as the Authority may reasonably request in connection with the Project to obtain the required permits and approvals for construction, operation and maintenance of the Project. Neither County nor any County Agency is obligated to (i) exercise its legal rights in order to avoid or eliminate the requirement to obtain any required permits or approvals, or (ii) grant permits and approvals for which it is the authorizing entity. County will apply its usual and customary procedures and criteria in considering applications from the Authority for such permits and approvals; and
3. Provided the Authority reasonably complies with all Countywide standard procedures for processing applications for the Land Use Approvals or other Discretionary Actions, the County shall expedite the processing of Land Use Approvals and Discretionary Actions to the maximum extent possible.

3.2.4.4 Cooperation. In the event of any opposition to the Project by a third party, including, but not limited to, governmental entity(ies) or official(s), the County hereby agrees, if requested by the Authority, to affirmatively cooperate in supporting the Project. Such cooperation does not include initiating any legal or administrative proceeding, intervening in such, or becoming a party to such proceedings.

3.2.4.5 Cooperation In the Event of Legal Challenge. In the event of any legal action instituted by a third party private or governmental entity or official challenging the validity of any term, provision or condition of this Agreement, the Parties hereby agree to affirmatively cooperate in defending against such challenge, but such cooperation shall not include bringing an action in the name of the County or sharing the expense of defense of any such legal action by the County.

3.2.4.6 Defense and Indemnification. The Authority agrees as a condition of receiving any land use approvals, entitlements, discretionary or ministerial permits (approvals) from the County related to the Project to indemnify and defend the County, at the Authority's sole cost and expense, from any claim, action, or proceeding brought against the County because of, or resulting from, the issuance of such approvals. The Authority will reimburse the County for any damages, court costs, and attorney fees which the County may be required by the court to pay as a result of such claim, action, or proceeding. The County shall promptly notify the Authority of any such claim, action, or proceeding and will cooperate in its defense. The County may also, at its sole discretion, participate directly in the defense of any such claim, action, or proceeding but such participation shall not relieve the Authority of its obligations under this condition.

3.2.5 Design and Improvement Standards. Standards for the performance of all road design covering repair and improvement on Local Roads and Crossing Structures shall meet or exceed the improvement standards listed in Exhibit B (Project Specific

Information) in effect as of the applicable Setting Date, unless the Parties later agree otherwise (including, but not limited to, in a development agreement that provides for application of then-existing improvement standards).

The County acknowledges the Authority's desire to have consistent road repair, improvement and new work standards across all affected jurisdictions (including Colusa and Glenn counties) and will collaborate with Authority to resolve any disputes concerning applicable standards.

3.2.6 Condition Assessment. Within 30 days prior to the commencement of Project construction work that is expected to impact Local Roads and Crossing Structures, the Authority will perform a preconstruction road condition survey of the Local Roads and Crossing Structures (including any County roads not specifically listed herein) anticipated to be affected by Project-related construction traffic and the County will calculate an estimated loss of road life by way of an Equivalent Single Axle Load ("ESAL") analysis. The preconstruction survey shall include video, photographs and other evidence sufficient to document the then-current condition of the affected Local Road and Crossing Structure segments. If construction is phased, the Authority will conduct or procure a further survey at the completion of each phase and at any additional times as may be required upon request, in County's reasonable discretion, to document the deterioration of road conditions during Project construction in anticipation of repairs pursuant to this Agreement. Consideration shall be given to other non-Project related factors that may cause roadway degradation in determining the Authority's responsibility for Local Road and Crossing Structure repairs. The Authority agrees to pay all costs reasonably incurred by the County in reviewing such surveys as set out in Section 3.2.8.

The Parties may elect for the County, rather than the Authority or its contractor, to perform the surveys required by this Section, subject to the Authority's reimbursement of Covered Expenses reasonably incurred.

3.2.7 Corrective Action. Unless the County and the Authority otherwise agree, the Authority shall prepare a corrective action plan for all project construction-related road damage pursuant to the "Condition Assessment" provision, above. Upon County approval thereof, which approval shall not be unreasonably withheld, unless the County and the Authority agree to defer implementation until Project completion, the Authority shall implement the plan at its sole cost and expense in a time and manner to be agreed upon with the County.

The Authority shall notify the County in writing (e-mail notice to the Public Works Director or designee is sufficient) at least 24 hours, or such longer period specified in the applicable permit, prior to commencing any corrective work. The Authority shall use commercially reasonable efforts to implement the plan as approved by the County, provided that the Authority shall be permitted to adjust the corrective action plan if strict adherence to the plan would result in unreasonable costs or schedule issues, and such adjustments shall not be considered a breach of this Agreement. In the event that the Authority determines an adjustment to an approved corrective action plan is required, the Authority shall notify the County in writing of such adjustment as soon as reasonably practicable.

Alternatively, if the Parties agree, rather than performing some or all of the corrective work itself, the Authority may provide reimbursement to the County for the County's Covered Expenses in exchange for the County's assumption of the obligation to perform such work.

The Parties acknowledge that the Project is expected to be constructed over 7 to 8 years' total time from start to end of construction and in some, but not all, instances work in specific locations may be intermittent with significant time passing between start of work and end of work. The actual use and damage of roads for the Project will vary and there may be times when Project damage is incurred of sufficient magnitude requiring interim maintenance to resume suitable road conditions for routine non-project related traffic. The Project team shall closely coordinate with the County during the entire project duration to ensure the County's needs for suitable, well-maintained roads to be in service is achieved at all times over the course of the entire Project. The Authority and the County agree that the Parties may find it mutually beneficial to pool resources in the delivery of intermittent repair of roads that are damaged because of Project activity.

3.2.8 Reimbursement Procedure. Prior to incurring Covered Expenses pursuant to this Agreement, the Authority and the County shall agree on reasonable methods for recording Covered Expenses (including, for example, staff and management timekeeping policies and procedures).

3.2.9 The County shall ensure that staff labor costs and task descriptions are recorded in reasonable detail and records kept in accordance with its records retention policies, or for any longer period required by law (including the Authority's Records Management Policy), or outside funding sources.

3.2.10 The County shall submit to the Authority an invoice on account of all amounts then payable by the Authority to the County on a monthly basis, no later than the tenth day following the last day of the month being invoiced, unless some other period is agreed to by the Parties in writing, until the expiration or earlier termination of this Agreement.

3.2.11 Each invoice shall include any supporting documentation reasonably necessary to enable the Authority to fully and accurately determine (without needing to refer to any other documentation or information) the amounts payable by the Authority to the County under this Agreement, including any such documentation or information, which the Authority may by written notice from time to time require the County to set out or attach, whether in relation to a specific invoice or all invoices generally.

3.2.12 Within 30 days after the Authority's receipt of a complete invoice that satisfies all the requirements set forth above, the Authority shall approve and pay such invoice or dispute all or a portion of such invoice. The Authority shall provide the County the reason(s) for any disputed portions of such invoice and withhold the disputed amount, while remitting timely payment for the undisputed portions of the subject invoice. The terms and conditions of Section 5.5 shall apply to any such dispute.

3.3 Agreement and Assurances on the part of the County. In consideration for the Authority entering into this Agreement, and as an inducement for the Authority to obligate itself

to carry out the covenants and conditions in this Agreement and effectuate the promises, purposes, and intentions in this Agreement, the County agrees as follows:

3.3.1 Entitlement to Develop. Authority has the vested right to develop the Project subject to the terms and conditions of this Agreement, the Applicable Rules, Land Use Approvals, the Final EIR/EIS and the Reserved Powers. The Authority's vested rights under this Agreement shall include, without limitation, the right to construct, operate and maintain the Project, and mitigate environmental effects subject to the Applicable Rules, Land Use Approvals, the Final EIR/EIS, the Reserved Powers and the Benefits and Obligations Contract.

3.3.2 Consistency in Applicable Rules. Based upon all information made available to the County up to or concurrently with the execution of this Agreement, and subject to approval of the Land Use Approvals, the County finds and certifies that no Applicable Rules prohibit or prevent the full completion and operation of the Project as described in the Final EIR/EIS.

3.3.3 No Warranty of Completion. By entering into this Agreement, the Authority does not warrant that it will construct and achieve completion of the Project, and failure to do so shall not be considered a default under this Agreement.

3.3.4 Changes in Applicable Rules.

3.3.4.1 Nonapplication of Changes in Applicable Rules. Any change in, or addition to, the Applicable Rules, including, without limitation, any change in any applicable general or specific plan, zoning or building regulation, adopted or becoming effective after the execution of this Agreement by all Parties, including, without limitation, any such change by means of ordinance, County charter amendment, initiative, referendum, resolution, motion, policy, order, or moratorium, initiated or instituted for any reason whatsoever and adopted by the County, the Board of Supervisors, the Planning Commission, or any other Board, Commission, Department, or Agency of the County, or any officer or employee thereof, or by the electorate, as the case may be, which would, absent this Agreement, otherwise be applicable to the Project and which would conflict in any way with the Applicable Rules, Land Use Approvals, or the Final EIR/EIS shall not be applied to the Project unless such changes represent an exercise of the County's Reserved Powers or are otherwise agreed to in this Agreement. Notwithstanding the foregoing, Authority may, in its sole discretion, consent in writing to the application to the Project of any change in the Applicable Rules.

3.3.4.2 Changes in Uniform Codes. Notwithstanding any provision of this Agreement to the contrary including Section 3.2.5, development of the Project shall be subject to changes that may occur from time to time in the Uniform Codes. The design and construction requirements for an individual action or construction contract under the Project shall be governed by the Uniform Code then in effect at the Setting Date.

3.3.4.3 Changes Mandated by Federal or State Law. This Agreement shall not preclude the application to the Project of changes in, or additions to, the Applicable Rules,

including rules, regulations, ordinances, and official policies, to the extent that such changes or additions are mandated to be applied to developments such as this Project by state or federal laws or regulations, pursuant to the Reserved Powers. In the event state or federal laws or regulations prevent or preclude compliance with one or more provisions of this Agreement, such provisions shall be modified or suspended as may be necessary to comply with such state or federal laws or regulations.

3.3.5 Subsequent Development Review. The County shall not require the Authority to obtain any approvals or permits for the development of the Project in accordance with this Agreement other than those permits or approvals that are required by the Applicable Rules, the Reserved Powers, the Land Use Approvals and/or Exhibit A (Permit Requirement Matrix), and subject to the siting and operational authority of the California Public Utilities Commission.

3.3.6 Intentionally Deleted.

3.3.7 Effective Development Standards. The County agrees that it is bound to the uses, intensities of use, and densities on this Property that are permitted by this Agreement and the Land Use Approvals, insofar as this Agreement and the Land Use Approvals so provide or as otherwise set forth in the Applicable Rules or the Reserved Powers. The County hereby agrees that it will not unreasonably withhold or unreasonably condition any Land Use Approval or other Discretionary Action that must be issued by the County in order for construction, operations and maintenance of the Project to proceed, provided that the Authority reasonably and satisfactorily complies with all countywide standard procedures for processing applications for the Land Use Approval or other Discretionary Action.

3.3.8 Use of Property. The County agrees that the Authority may use the Property for construction of the Project, and for a setup and staging area.

3.3.9 Moratoria or Interim Control Ordinances. In the event any ordinance, resolution or policy is enacted by action of the County that relates directly or indirectly to the Project or to the rate, amount, timing, sequencing, or phasing of the development or construction of the Project on all or any part of the Property, County agrees that such ordinance, resolution, or policy shall not apply to the Property or this Agreement, unless such changes are adopted pursuant to the Reserved Powers or other applicable provisions of this Agreement and are not otherwise superseded by the siting and operational authority of the Final approved EIR/EIS unless agreed to in writing by the Authority.

3.3.10 Infrastructure Financing. If Authority undertakes infrastructure financing, such as Mello-Roos community facilities districts, the County will cooperate fully in such undertaking and will process any related applications as expeditiously as possible.

3.3.11 Impact Fees. Impact Fees imposed by the County with respect to the Project shall be tied to a specific service or service capacity within the County, in existence as of the approval of this Agreement by the Board of ~~Supervisors, that~~Supervisors that is directly impacted by the Project and not already covered in this Agreement. Impact Fees shall

be calculated at the time of the County's issuance of the relevant permit and assessed based on values existing at that time. Impact Fees imposed by the County on the Project may not be increased in amount. This Agreement shall not limit any impact fees, linkage fees, exactions, assessments, fair share charges, or other similar fees or charges imposed by governmental entities not a party to this Agreement and which the County is required to collect or assess pursuant to applicable law (*e.g.,* school district impact fees pursuant to Government Code Section 65995).

3.3.12 Processing Fees. The Authority shall pay all Processing Fees. Processing Fees shall be limited to Processing Fees in effect on the Effective Date. The Authority shall pay such Processing Fees, on a pass through basis, without markup, within 30 days of Authority receiving a properly submitted and complete invoice from the County and otherwise set out in Section 3.2.8.

3.3.13 Timeframes and Staffing for Processing and Review; Consultants. The County agrees that expeditious processing of the Land Use Approvals, any Discretionary Actions, any Ministerial Permits and Approvals, and any other approvals or actions which may be required for the Project are critical to the implementation of the Project. In recognition of the importance of timely processing and review of the Land Use Approvals, any Discretionary Actions, and any Ministerial Permits and Approvals, the County agrees to work and cooperate with the Authority to establish time frames for processing and reviewing requests for such approvals and to comply with timeframes established to the greatest extent possible. Furthermore, the County shall expedite all requests by the Authority for any such approvals requested for the Project to the greatest extent possible. To facilitate the expeditious review of subsequent approvals, the County may engage a qualified third party consultant or consultants (e.g., civil engineers, electrical engineers, building plans permit examiner, plan check inspector, surveyors, land use/development review professionals, or similar professionals) (each, a "Consultant"), to assist the County in its review of subsequent approvals, provided, that the County shall retain its independent authority to issue any such subsequent approval. Consultants may provide the County with technical assistance required to review subsequent approvals, or assistance required to expedite the processing of subsequent approvals. The County will notify the Authority before engaging any Consultant for which it will seek reimbursement from Authority and provide the Authority with the Consultant's proposed scope of work and cost estimate, which will be subject to the Authority's review and approval, along with a proposed form of reimbursement agreement consistent with the terms of this Section 3.3.13. The Authority acknowledges and agrees that declining the use of a Consultant will mean that the subject subsequent approval will not be subject to expedited review and processing; provided, however, that such subsequent approval will remain subject to applicable law concerning permit review and approval and the County's normal permit review and approval process and timelines.

3.3.14 Payment in Lieu of Taxes. The Authority agrees that it shall pay to the County annual payments in lieu of taxes ("PILT") for properties under the Authority's ownership within the County shown in Exhibit B, plus any Authority owned lands purchased for the purpose of mitigating environmental effects, in an amount calculated and verified by the County's Auditor-Controller not to exceed the amount of property taxes without applying the Williamson Act that County would have received based on assessment to the Project

property prior to the sale of the Project property to the Authority had the Project been subject to County taxes based on the overall assessed value increase determined in accordance with applicable law (including transfer tax and recording fees arising from or associated with such properties). For purposes of illustration, the County has calculated the estimated PILT amounts payable to the County with respect to the properties under the Authority's ownership within the County, as set forth in Exhibit B (Project Specific Information). Upon acquiring fee title for each property within the County, the Authority agrees to pay directly to County the PILT amounts for each property within 30 days of the Authority receiving a properly submitted and complete invoice for the foregone property tax from the County Auditor-Controller and otherwise in accordance with Section 3.2.8. Charges for County services included in the PILT amounts shall only include services paid from general ad valorem property taxes and shall not include fees and services billed separately to the Authority. An example of the calculation to be made for PILT is set forth in Exhibit B.

The County agrees to allocate the PILT amounts paid by the Authority annually among the entities and purposes in amounts and proportions that would otherwise be received by these entities and purposes.

3.3.15 Ownership of Project; Prioritization of Local Agencies. The Benefits and Obligations Contract describes the ownership of Capacity Interest in the Project and the method for transferring such Capacity Interest, including the potential sale, transfer or assignment of Capacity Interest by the Authority for the account of the owner of such Capacity Interest following a default by such owner, and to the extent that the Authority has not previously authorized a prioritization in acquiring such Capacity Interest, including through any right of first offer described in the Benefits and Obligations Contract County Agencies which are currently on a wait list to acquire Capacity Interest shall have a right of first offer to assume all or a portion of the Capacity Interest being disposed by the Authority.

3.3.16 Sales Tax / Office. To the full extent allowed by law, the Authority will require the construction contractors to participate in the jobsite sub-permit reporting through the CDTFA to maximize local taxes collected on behalf of the counties for work on the Project occurring within each county. To the full extent allowed by law, the Authority will require that all construction contractors providing services, labor and materials for the Project under contracts in excess of $1M, (a) obtain all necessary sales/use tax jobsite sub-permit(s) from CDTFA; (b) comply with all associated reporting requirements; and (c) otherwise designate a location within the Project Area as the place of use of materials and/or sale of fixtures used in the construction of the Project.

3.3.17 Memorandum of Understanding. The Parties acknowledge that the Parties have entered into that certain Memorandum of Understanding, on or about November 22, 2021, pursuant to which the Authority and the County have reached agreement on terms and conditions regarding the County's area of origin water rights claims to Funks Creek and Stone Corral Creek within the County and related matters.

3.3.18 Impact Alleviation on County Administrative Services. In consideration of the administrative functions within the County that may be materially

affected by the implementation of the terms of this Agreement, the Authority is committing to provide funding as follows:

a. For a duration of seven years starting with the initiation of the first construction contract by the Authority entered into after the start of Phase 3, the Authority shall make an annual lump sum payment recognized as a contribution to the County's efforts related to this agreement in the areas of grants assistance, and for County Financial Analyst services. County agrees to demonstrate that such funds shall be used solely for these purposes and with at least 80% of funds each year being applied to grants assistance. Should the County fail to demonstrate these conditions are met, the Authority reserves the right to withhold future payments until County is able to meet the conditions. The parties agree that the primary use of the grants assistance sums will be for Project and Maxwell Community Plan Implementation related activities and any of grants assistance sums towards County-wide activities are secondary. The Authority shall make payments in these amount over each of the seven years:

   First three years – $120k/yr

   Year Four - $96k

   Year Five - $72k

   Year Six - $48k

   Year Seven - $24k

3.3.19 USDA Rural Small Community Program Loan (up to $450 million). It is acknowledged that the County assisted in securing this crucial financing mechanism serving to provide a means for County agricultural interests to affordably participate in the Sites Project. In consideration of this effort, the Authority is willing to further explore the assignment of the loan terms and conditions and directly and specifically to Colusa County interests that i) are participating in the Project and ii) affirmatively express their desire to be recipients of such assignment. The Authority and the participating Colusa County interests will determine mutually agreed upon terms for the assignment of the loan, if pursued and allowed by USDA, provided that upon such assignment, the Authority shall no longer have any rights or obligations under such loan.

3.3.20 Maxwell Gateway Park Design. The Authority agrees to procure at its own cost and as a service to the County and/or Maxwell Park and Recreation District, the 100% design of up to a 3 acres gateway entry park conceptually described in the Adopted Maxwell Community Plan. Such design shall occur concurrent with the design of the reservoir recreation facilities and shall be consistent in character and feel to the reservoir recreation elements to create a connectedness between the facilities and encourage those that use the park to also extend their local visit to include the reservoir facilities.

4. DEFAULT PROVISIONS.

4.1 Default By the Authority.

4.1.1 Default. In the event the Authority does not perform its obligations under this Agreement in a timely manner, the County shall have all rights and remedies provided by this Agreement, which shall include compelling the specific performance of the obligations of the Authority under this Agreement, or modification or termination of this Agreement, provided that the County has first complied with the procedure in Section 4.1.2 hereof.

4.1.2 Notice of Default. The County shall first submit to the Authority a written notice of default stating with specificity those obligations specified in this agreement that have not been performed. Upon receipt of the notice of default, the Authority shall promptly commence to cure the identified default(s) at the earliest reasonable time after receipt of the notice of default and shall complete the cure of such default(s) not later than 120 days after receipt of the notice of default, or such longer period as is reasonably necessary to remedy such default (s), provided that the Authority shall continuously and diligently pursue such remedy at all times until such default(s) is cured.

4.1.3 Failure to Cure Default Procedure. If after the cure period has elapsed, the Director of Planning finds and determines that the Authority, or its successors, transferees, and/or assignees, as the case may be, remains in default and that the County intends to terminate or modify this Agreement, or those transferred or assigned rights and obligations, as the case may be, the Director of Planning shall make a report to the Board of Supervisors and then set a public hearing before the Supervisors in accordance with the notice and hearing requirements of Government Code Sections 65567 and 65868.

4.1.4 Action by Board of Supervisors. The Board of Supervisors shall act upon the report of the Planning Director within 45 days after the Planning Director has made a report to the Board of Supervisors, or within such additional period as may be agreed upon by the Authority and the Board of Supervisors. The failure of the Board of Supervisors to act within 45 days shall be deemed to be a determination that the Authority is not in default of this Agreement.

4.1.5 Dispute Resolution. In the case of a dispute as to whether the Authority has cured the default, the Parties shall submit the matter to dispute resolution pursuant to Section 5.5 of this Agreement. The County shall commence dispute resolution within 30 days of the Board of Supervisors making a final determination that the Authority is in default.

4.1.6 Termination or Modification of Agreement. The County may terminate or modify this Agreement, or those transferred or assigned rights and obligations, as the case may be, after a final determination pursuant to Section 5.5 of this Agreement that the Authority is in default. There shall be no modifications of this Agreement unless the Board of Supervisors acts pursuant to Government Code Sections 65867.5 and 65865.

4.2 Default By The County.

4.2.1 Default. In the event the County does not accept applications for, process, or render a decision on necessary development permits, entitlements, or other land use or building approvals for the Project, including the Land Use Approvals, Discretionary Actions and Ministerial Permits and Approvals, as provided in this Agreement and upon compliance with the requirements thereof, or as otherwise agreed to by the Parties, or the County otherwise defaults under the provisions of this Agreement, the Authority shall have all rights and remedies provided herein or by applicable law, which shall include compelling the specific performance of the County's obligations under this Agreement.

4.2.2 Notice of Default. The Authority shall first submit to the County a written notice of default stating with specificity those obligations that have not been performed. Upon receipt of the notice of default, the County shall promptly commence to cure the identified default(s) at the earliest reasonable time after receipt of the notice of default and shall complete the cure of such default(s) not later than 120 days after receipt of the notice of default, or such longer period as is reasonably necessary to remedy such default(s), provided that the County shall continuously and diligently pursue such remedy at all times until such default(s) is cured. In the case of a dispute as to whether the County has cured the default, the Parties shall submit the matter to dispute resolution pursuant to Section 5.5 of this Agreement.

4.2.3 Termination or Modification of Agreement. The Authority may terminate or modify this Agreement after a final determination pursuant to Section 5.5 of this Agreement that the County has failed to cure its default.

4.3 No Monetary Damages. It is acknowledged by the Parties that neither the County nor the Authority would have entered into this Agreement if it were liable in monetary damages under or with respect to this Agreement or the application thereof. Therefore, the Parties agree that the Parties shall not be liable in monetary damages, and the Parties covenant not to sue for or claim any monetary damages for the breach of any provision of this Agreement.

5. GENERAL PROVISIONS.

5.1 Effective Date. This Agreement shall be effective upon the thirty-first day after the Board of Supervisors, after conducting a duly-noticed public hearing, adopts an ordinance approving and authorizing this Agreement, or as otherwise provided by California law.

5.2 Term.

The Term of this Agreement shall commence on the Effective Date and shall extend to the earlier of (i) 20 years or (ii) the earlier termination in accordance with the terms of this Agreement, except with respect to (1) the Authority's obligation to make the PILT in accordance with Section 3.3.14 of this Agreement, which obligation of the Authority shall continue until the Authority has made the last such PILT as described in Exhibit B (Project Specific Information), unless said Term is otherwise terminated, modified, or extended in writing by circumstances set forth in this Agreement or by mutual consent of the Parties hereto and (2) the Authority's obligations to wind-up the Project as described in Section 3.1.4 of this Agreement. Prior to the expiration of the Term,

the Parties may by mutual agreement extend the Term for an additional 20 years. Following the expiration of the Term, this Agreement shall terminate and be of no further force or effect; provided, however, that this termination shall not affect any right or duty arising from entitlements or approvals granted for the Project, including the Land Use Approvals on the Property, approved concurrently with, or subsequent to, the date this Agreement is executed by all Parties. The Term of this Agreement shall automatically be extended for the period of time of any actual delay resulting from any enactments pursuant to the Reserved Powers or moratoria, or from legal actions or appeals that enjoin performance under this Agreement or act to delay or stay performance under this Agreement (other than bankruptcy or similar procedures), or from litigation relating to the Land Use Approvals.

5.2.1 In the event that the Benefits and Obligations Contract is terminated prior to the expiration of this Agreement, the Authority may terminate this Agreement in whole or in part by notice to the County specifying the extent of termination and its effective date.

5.3 Enforced Delay; Extension of Time of Performance. In addition to specific provisions of this Agreement, whenever a period of time, including a reasonable period of time, is designated within which either Party is required to do or complete any act, matter, or thing, the time for the doing or completion thereof shall be extended by a period of time equal to the number of days during which such Party is actually prevented from, or is unreasonably interfered with, the doing or completion of such act, matter, or thing because of causes beyond the reasonable control of the Party to be excused, including, but not limited to: war; insurrection; riots; floods; earthquakes; fires; casualties; acts of God; litigation and administrative proceedings against the Project (not including any administrative proceedings contemplated by this Agreement in the normal course of affairs); any approval required by the County (not including any period of time normally expected for the processing of such approvals in the ordinary course of affairs); restrictions imposed or mandated by other governmental entities; enactment of conflicting state or federal laws or regulations; judicial decisions; the exercise of the County's Reserved Powers; or similar bases for excused performance that is not within the reasonable control of the Party to be excused (financial inability expected). This Section shall not be applicable to any proceedings with respect to bankruptcy or receivership initiated by or on behalf of the Authority or, if not dismissed within 90 days, by any third parties against the Authority. If written notice of such delay is given to either Party within 30 days of the commencement of such delay, an extension of time for such cause will be granted in writing for the period of the enforced delay, or longer as may be mutually agreed upon.

5.4 CEQA Compliance. This Agreement anticipates a variety of later activities that may result in "projects" within the meaning of CEQA. As of the date of this Agreement, however, no such projects have been identified, explored, formulated, or proposed in any level of meaningful detail. For all of these reasons, environmental review of such projects is thus premature and not required by CEQA. The Parties shall conduct all appropriate environmental review, if necessary, at the time when such review is required, and before the approval or implementation of any project that may result from the activities anticipated in this Agreement. Responsibility for performing

environmental review, including which entity will serve as the "lead agency," will be determined at the appropriate time and in the legally required manner.

5.5 Dispute Resolution. Disputes arising under this Agreement will be resolved, whenever possible, through the process of meeting and conferring in good faith or mediation. To that end, in the event of a dispute as to compliance with any of the provisions, terms and conditions of this Agreement, the Parties agree as follows:

5.5.1 Informal Dispute Resolution Before Mediation.

5.5.1.1 The Parties agree to undertake good faith efforts to resolve any dispute arising in connection with this Agreement within 60 days after the date that notice of such dispute is provided in writing prior to resorting to formal means of dispute resolution.

5.5.1.2 If any dispute is not capable of resolution by and among the representatives of the County and the Authority authorized to administer this Agreement, the authorized representative of the County and the Authority's board chair or his/her authorized representative (who shall be the Executive Director of the Authority or a member of the Authority board) shall meet and confer in an effort to resolve any such dispute.

5.5.1.3 If such efforts between the Parties' designees do not resolve the dispute within 30 days after their commencement, the County and the Authority shall have such other remedies available to them as are provided for in this Agreement or as otherwise exist at law or in equity.

5.5.1.4 No other means of dispute resolution, including mediation, arbitration and litigation, shall be available to the Parties unless they have exhausted the process provided for in this Section 5.5.1.

5.5.2 Mediation.

5.5.2.1 If a dispute arises among the Parties relating to or arising from a Party's obligations under this Agreement that cannot be resolved through informal discussions and meetings as described in Section 5.5.1 of this Agreement, the Parties shall be required to first endeavor to settle the dispute in an amicable manner, using mandatory non-binding mediation under the rules of JAMS, American Arbitration Association, or any other neutral mediation organization agreed upon by the Parties before having recourse in a court of law. Mediation shall be commenced by sending a notice of demand for mediation to the other Party.

5.5.2.2 A single mediator that is acceptable to both Parties shall be used to mediate the dispute. The mediator will be knowledgeable in the subject matter of this Agreement, if possible, and chosen from lists furnished by JAMS, AAA, or any other agreed-upon mediator.

5.5.2.3 The expenses of witnesses for either side shall be paid by the Party producing such witnesses. All mediation costs, including required travel and other expenses of the mediator, and the cost of any proofs or expert advice produced at the direct request of

the mediator, shall be equally shared by the Parties to the dispute unless otherwise directed by the mediator.

5.5.3 Conduct of Mediation.

5.5.3.1 Mediation will be conducted in an informal manner. Discovery shall not be allowed. The discussions, statements, writings and admissions and any offers to compromise during the proceedings will be confidential to the proceedings (pursuant to California Evidence Code §§ 1115-1128; 1152) and will not be used for any other purpose unless otherwise agreed by the Parties in writing. The Parties may agree to exchange any information they deem necessary.

5.5.3.2 The Parties shall have representatives attend the mediation who are authorized to settle the dispute, though a recommendation of settlement may be subject to the subsequent approval of each Party's board or legislative body. The parties may have attorneys, witnesses or experts present.

5.5.3.3 Any resultant agreements from mediation shall be documented in writing. The results of the mediation shall not be final or binding unless otherwise agreed to in writing by the Parties. Mediators shall not be subject to any subpoena or liability and their actions shall not be subject to discovery.

5.5.3.4 Nothing in this Section 5.5 shall relieve the Parties from performing their obligations under this Agreement. The Parties shall be required to comply with this Agreement, including the performance of all disputed activity and disputed payments, pending the resolution of any dispute under this Agreement.

5.5.3.5 Any offers to compromise before or after mediation proceedings will not be used to prove a Party's liability for loss or damage unless otherwise agreed by the Parties in writing (pursuant to California Evidence Code §1152).

5.6 Applicable Law. This Agreement shall be construed and enforced in accordance with the laws of the State of California.

5.7 Amendments. This Agreement may be amended from time to time by mutual consent in writing of the Parties in accordance with Government Code Section 65868.

5.8 Assignment. The rights and obligations of the Authority under this Agreement may not be transferred or assigned in whole or in part without the consent of the County, which shall not be unreasonably withheld, conditioned, or delayed, and upon such assignment the assignor shall be released from the obligations so assigned. The failure of any successor-in-interest to perform the obligations assigned to it may result, at the County's option, in a declaration that this Agreement has been breached with regards to that specific successor-in-interest, and an election to terminate this Agreement as provided for in Section 4.2.3 hereof, as it relates to that successor-in-interest's holding.

5.9 Covenants. The provisions of this Agreement shall constitute covenants that shall run with the land comprising the Property for the benefit thereof, and the burdens and benefits

hereof shall bind and inure to the benefit of all assignees, transfers, and successors to the Parties hereto during the Term of this Agreement.

5.10 Relationship of the Parties. It is understood and agreed by the Parties that the contractual relationship created between the Parties hereunder is that the Authority is an independent contractor and not an agent of the County. Further, the County and the Authority hereby renounce the existence of any form of joint venture or partnership between them and agree that nothing herein or in any document executed in connection herewith shall be construed as making the County and the Authority joint venturers or partners.

5.11 Notices. Any notice or communication required under this Agreement between the County or the Authority must be in writing and shall be given either personally or by registered or certified mail, return receipt requested. If given by registered or certified mail, the same shall be deemed to have been given and received on the first occur of (i) actual receipt by any of the addresses designated below as the party to whom notices are to be sent, or (ii) five (5) days after a registered or certified letter containing such notice, properly addressed, with postage prepaid, is deposited in the United States mail. If personally delivered, a notice shall be deemed to have been given when delivered to the party to whom it is addressed. Any party hereto may at any time, by giving 10 days written notice to the other party hereto, designate any other address in substitution of the address, or any additional address, to which such notice or communication shall be given. Such notices or communication shall be given to the parties at their addresses set forth below:

If to the County:

County of Colusa
546 Jay Street, Suite 108
Colusa, CA 95932
ATTN: County Administrative Officer

with copies to:

County of Colusa
1213 Market Street
Colusa, CA 95932
ATTN: Community Development Director

If to the Authority:

Sites Project Authority
P.O. Box 517
122 Old Highway 99 West
Maxwell, CA 95955
ATTN: Executive Director
jbrown@sitesproject.org

with copies to:

and to:

5.12 Recordation. As provided in Government Code Section 65868.5, the Clerk of the County shall record a copy of this Agreement with the Recorder of the County no later than 10 days after the County enters into the Agreement. Upon expiration of the Term of this Agreement, the Clerk of the County shall record a written instrument providing notice of the termination of this Agreement. The Authority shall provide the Clerk of the County with the fees for such recordings prior to or at the time of such recordings if such fees are assessable.

5.13 Constructive Notice and Acceptance. Every person who now or hereafter owns or acquires any right, title, interest in or to any portion of the Property, is and shall be conclusively deemed to have consented and agreed to every term, provision and condition contained herein, whether or not any reference to this Agreement is contained in the instrument by which such person acquired an interest in the Property.

5.14 Successors and Assigns. The provisions of this Agreement shall be binding upon and shall inure to the benefit of the Parties, any subsequent owner of all or any portion of the Property, and their respective successors and assignees during the Term of this Agreement.

5.15 Severability. If any provisions, conditions, or covenants of this Agreement, or the application thereof to any circumstances of either Party, shall be held invalid or unenforceable, the reminder of this Agreement or the application of such provision, condition, or covenant to persons or circumstances other than those as to whom or which it is held invalid or unenforceable shall not be affected thereby and shall be valid and enforceable to the fullest extent permitted by law.

5.16 Time of the Essence. Time is of the essence for each provision of this Agreement of which time is an element.

5.17 Waiver. No waiver of any provision of this Agreement shall be effective unless in writing and signed by a duly authorized representative of each Party and refers expressly to this Section. No waiver of any right or remedy with respect to any occurrence or event shall be deemed a waiver of any right or remedy with respect to any other occurrence or event.

5.18 No Third Party Beneficiaries. The only Parties to this Agreement are the County and the Authority and their successors-in-interest. There are no third party beneficiaries and this Agreement is not intended and shall not be construed to benefit or be enforceable by any other person or entity whatsoever.

5.19 Entire Agreement. This Agreement sets forth and contains the entire understanding and agreement of the Parties, and there are no oral or written representations, understandings, or ancillary covenants, undertakings or agreements that are not contained or expressly referred to herein (or any such representations, understandings, or ancillary covenants, undertakings or agreements arc integrated in this Agreement) and no testimony or evidence of any such representations, understandings, or covenants shall be admissible in any proceedings of any kind or nature to interpret or determine the terms, provisions or conditions of this Agreement.

5.20 Legal Advice, Neutral Interpretation, Headings, Table of Contents, and Index. Each Party acknowledges that it has received independent legal advice from its attorneys with respect to the advisability of executing this Agreement and the meaning of the provisions hereof. The provisions of this Agreement shall be construed as to their fair meaning, and not for or against any Party based upon any attribution to such Party as the source of the language in question. The headings, table of contents, and index used in this Agreement are for the convenience of reference only and shall not be used in construing this Agreement.

5.21 Discretion to Encumber. This Agreement shall not prevent or limit the Authority in any manner, at its sole discretion, from encumbering the Project or any portion of the Authority's

right in land for the Project by any mortgage, deed of trust, or other security device securing financing with respect to the Project or its improvements.

5.22 Expedited Processing. The County agrees to cooperate with the Authority in the processing of any legal action seeking specific performance, declaratory relief, or injunctive relief, to set court dates at the earliest practicable date(s), and not to cause delay in the prosecution/defense of the action, provided such cooperation shall not require any Party to waive any rights; but such cooperation shall not include bringing an action in the name of the County or sharing the expense of any such action by the County.

5.23 Counterparts; Electronic Execution. This Agreement may be executed in duplicate originals, each of which is deemed to be an original, but all of which, together, shall constitute but one and the same instrument. The Parties acknowledge that executed copies of this Agreement may be exchanged by facsimile or other electronic format (e.g. "pdf," "tif" or "DocuSign") and that the signatures on such copies shall be deemed to be effective and valid as original signatures. This Agreement, not counting the Cover Page, Table of Contents or Index, consists of [_] pages and [_] Exhibits.

5.24 Controlling Law Venue. *This Contract is made in the County of Colusa, State of California. The parties specifically agree to submit to the jurisdiction of the Superior Court of California for the County of Colusa."*

IN WITNESS WHEREOF, the Parties hereto have executed this Agreement as of the date first written above.

Sites Project Authority	**County of Colusa**
By: _____	By: _____
Jerry Brown, Executive Director	Daurice K. Smith, Board of Supervisor, Chair
APPROVED AS TO FORM:	APPROVED AS TO FORM:
By: _____	By: _____
Alan Doud, Authority General Counsel	Richard Stout, County Counsel

EXHIBIT A

Permit Requirement Matrix

Sites Reservoir Project Components Requiring Land Use Entitlements, Permits or Other Local Government Approvals

	Land Use Entitlement[1]	Williamson Act Contract Non-Renewal	Encroachment Permit[2]	Surface Mining and Reclamation Act Permit[3]	Building Permit	Grading Permit	Well and Waste Disposal	Retail Food Safety[4]	Air Quality Permit[5]	Transportation Permits[6]	Comments
Colusa County											
Sites Reservoir Project water storage and conveyance facilities, including: • Funks Pipelines • Funks and TRR West Easement • TRR West • On-site Quarry • Rock Processing • Saddle Dams 1 and 2 • Saddle Dam Access Roads • I/O Works • Golden Gate Dam • Sites Dam	Local zoning not applicable; General Plan designation can be overruled	Yes	Yes	Yes	Not Applicable	Yes	Yes	Not Applicable	Yes	Yes	Pursuant to California Code Section 53091(e) (https://law.justia.com/citations.html) "Zoning ordinances of a county or city shall not apply to the location or construction of facilities for the production, generation, storage, treatment, or transmission of water, or for the production or generation of electrical energy, facilities that are subject to Section 12808.5 of the Public Utilities Code, or electrical substations in an electrical transmission system that receives electricity at less than 100,000 volts." Includes permits associated with the demolition of existing buildings and abandonment of wells, underground storage tanks, on-site sewage disposal from Colusa County Environmental Health Division. The land use designation for this area is Agricultural and zoned Exclusive Agriculture, Foothill Agriculture, Rural Services, and Upland Conservation; over 10,000 acres are under Williamson Act Contracts.
Administration/Operations Building: • one-story, 3,400 square feet building • septic system, potable water provided wells, and electricity obtained from the Funks Reservoir switchyard	Yes, based on non-federal land location	No	TBD	Not Applicable	Yes	Yes	Yes	TBD	Yes	Yes	Currently proposed near Funks Reservoir and will require potable water and waste disposal facilities. May be located on federal land but not yet determined.
Maintenance/Storage Building: • one-story, 2,700 square feet building • septic system, potable water provided wells, and electricity obtained from the Funks Reservoir switchyard	Yes, based on non-federal land location	No	TBD	Not Applicable	Yes	Yes	Yes	Not Applicable	Yes	Yes	Currently proposed near Funks Reservoir and will require potable water and waste disposal facilities. May be located on federal land but not yet determined.

[1] Possible Land Use Entitlements include Use Permits, General Plan Amendments, and/or Zoning Amendments. NOTE: Not applicable to project components that will be "directly and immediately" used to store and transmit water and are not subject to zoning and building ordinances pursuant to California Code Sections 53091 and 53096. Pursuant to California Code Section 65402(c), a local agency may overrule county general plans that would obstruct its construction of any building or structure for a public purpose.
[2] Includes use of local jurisdiction's right-of-way such as installation of pipeline across or within roadways.
[3] Mining activities are regulated in California by the Surface Mining and Reclamation Act (SMARA) and the Lead Agency Review and Assistance (LARA) Program; Colusa County requires large- and small-scale mineral and natural gas extraction, processing, and reclamation operations to obtain a Conditional Use Permit.
[4] Colusa County Environmental Health is responsible for permitting and inspecting retail food facilities for compliance with the California Retail Food Code.
[5] Includes Authority to Construct, Permit to Operate from local air districts. NOTE: Yolo-Solano Air Quality Management District is comprised of the 2 counties and seven incorporated cities; Colusa and Glenn have county-specific air districts.
[6] Related to transport of heavy or oversized loads on county roads.

Visitors Center	Yes	TBD	TBD	Not Applicable	Yes	Yes	Yes	TBD	Yes	TBD	Precise location not determined, possibly located in the vicinity of the Reservoir and will require potable water and waste disposal facilities.
Improvements to existing roads, Including: • Delevan Road Repairs to existing roads, including: • Maxwell Sites Road New roads, including: • Sites Lodoga Road and Bridge • Sites Lodoga Temporary Detour Road • Huffmaster Road Realignment • Comm Road • Day Use Boat Ramp Access Road • Peninsula Hills Recreation Area Access Road • Stone Corral Creek Recreation Area Access Road	Not Applicable	Yes	Yes	Not Applicable	Not Applicable	Yes	Not Applicable	Not Applicable	Yes	Yes	Road improvements include shoulder improvements, intersection widening, structure improvements, new or improved gravel roadway, and paving; other public local roads including Sites Lodoga Road, Huffmaster Road, Comm Road South, and recreation area roads will be relocated or developed to accommodate project facilities. Repairs to existing roads are intended to return roads to pre-project conditions without changes in geometrics. Construction access and maintenance via onsite roads, including Funks Construction Access Road, Sites Base Dam Access Road, Golden Gate Dam Crest Access Road, I/O Tower Access Road, Funks PGP Maintenance Access Road, Sites Dam Crest Access Road, Saddle Dam Road, and Funks Construction Access Tehama-Colusa Canal Bridge.
Recreational Facilities: • Day-Use Boat Ramp • Peninsula Hills Recreation Area • Stone Corral Creek Recreation Area • Associated parking • Access to electricity • Potable water and toilet facilities • Emergency response facilities	Yes, including Minor Use Permit for Public Recreational Facilities and Campgrounds; Full Use Permit for Boat Ramps and Landings	Yes	Yes	Not Applicable	Yes	Yes	Yes	Yes	Yes	Yes	Permit requirements are based on conceptual layout and location and assume that recreational facilities would be subject to local building permits.
Glenn County											
Sites Reservoir water storage and conveyance facilities, including: • Saddle Dams 1, 3, 5, 6, 8A, and 8B • Saddle Dikes 1 and 2	Local zoning not applicable; General Plan designation can be overruled	Yes	Yes	Not Applicable	Not Applicable	Yes	Not Applicable	Not Applicable	Yes	Yes	Pursuant to California Code Section 53091(e) (https://law.justia.com/citations.html) "Zoning ordinances of a county or city shall not apply to the location or construction of facilities for the production, generation, storage, treatment, or transmission of water, or for the production or generation of electrical energy, facilities that are subject to Section 12808.5 of the Public Utilities Code, or electrical substations in an electrical transmission system that receives electricity at less than 100,000 volts." The existing land uses are Foothill Agriculture/Forestry and Intensive Agriculture; over 2,000 acres are under Williamson Act Contracts.
Improvements to existing roads, Including: • Road 68 • Road 69 • Road D	Not Applicable	Yes	Yes	Not Applicable	Not Applicable	Yes	Not Applicable	Not Applicable	Yes	Yes	Improvements to existing roads to support construction include shoulder improvements, intersection widening, structure improvements, and paving. Construction and maintenance on-site access via North Saddle Dam Road, South Saddle Dam Road and North Access Road

Yolo County											
Release Facilities: • TC Canal Intake • Dunnigan Pipeline • CBD Outlet	Not Applicable	No	Yes	Not Applicable	Not Applicable	Yes	TBD	Not Applicable	Yes	Yes	Pursuant to California Code Section 53091(e) (https://law.justia.com/citations.html) "Zoning ordinances of a county or city shall not apply to the location or construction of facilities for the production, generation, storage, treatment, or transmission of water, or for the production or generation of electrical energy, facilities that are subject to Section 12808.5 of the Public Utilities Code, or electrical substations in an electrical transmission system that receives electricity at less than 100,000 volts." In Yolo County, most of the facilities would be located underground and would not conflict with existing land use or zoning designations; these land uses/zoning do not prohibit this type of infrastructure.
Repairs to existing roads, including: • Road 7A • Road 8 • Road 89A • Road 90 • Road 99W	Not Applicable	No	Yes	Not Applicable	Not Applicable	Yes	TBD	Not Applicable	Yes	Yes	Improvements to existing roads to support construction include shoulder improvements, intersection widening, structure improvements, and paving. Construction access will be accessed from existing roads; maintenance would occur through a Project right-of-way easement. Repairs to existing roads are intended to return roads to pre-project conditions without changes in geometrics.

Source: Information in this table is derived from the Sites Reservoir Final EIR/EIS and updated with roads identified through current design efforts, interpretation of CA Code, and ongoing coordination with local agencies; TBD = To Be Determined (as design advances)

EXHIBIT B

Project Specific Information and Example of Calculation for Payment in Lieu of Taxes

Payment in lieu of Taxes Section 3.3.143.3.14	This amount is currently estimated to be $. 850,000 annually upon acquiring all land in Colusa County for the Project. Based on 2023 tax assessment basis. This amount shall be adjusted at such time that the property transfers from the private landowner to the Authority based upon the then current property tax basis for the properties removed from the County tax rolls. This amount shall be further adjusted annually at the rate of growth provided by the county assessor for the County.
Improvement Standards Section 3.2.5	• AASHTO – Guidelines for Geometric Design of Very Low-Volume Local Roads • AASHTO – A Policy on Geometric Design of Highways and Streets • Colusa County Department of Public Works – Standard No. RS-3 • AASHTO LRFD Bridge Design Specifications with California Amendments including the Caltrans Bridge Design Practice •

Example of Calculation for Payment in Lieu of Taxes

Property 1/Year 1 (sale to Project in Year 1):

1. Property tax based on Unrestricted Assessed Value (without Williamson Act adjustment) times the percentage of property sold to Project = Assessed Value Attributed to the Project
2. Assessed Value Attributed to the Project times 1% Ad Valorem Property Tax = Base Property Tax Value
3. Assessed Value Attributed to the Project times Yuba College Bonds Ad Valorem = Yuba College Base Tax Value
4. Special District Charges times percentage of property sold to the project = Special District Charge Base Value
5. (Base Property Tax Value + Yuba College Base Tax Value+ Special District Base Value) times the portion of the tax year remaining at time of sale = Prorated Tax Loss year one
6. Project pays PILT of the Prorated Tax Loss within 30 days after receiving a properly submitted and complete invoice for the foregone property tax from the County Auditor-Controller.

Property 1 Year 2:

1. (Base Property Tax Value + Yuba College Base Tax Value) times the Property Tax Growth Factor as determined by the County's Assessor = Annual Property Tax Base
2. Special District Charge times any growth factor identified in enabling measure = Annual Special District Base.
3. Annual Property Tax Base plus Annual Special District Base = PILT
4. Project pays PILT within 30 days after receiving a properly submitted and complete invoice for the foregone property tax from the County Auditor-Controller.

Example based on 2024 assessed value and sale occurring with six months remaining in the current tax year:

Year 1 Step 1:

APN_	**Tax Rate Area**	**Total Parcel Acreage**	**Total Project Acreage**	**% of Parcel to Project**	**Total Unres-tricted Assessed Value**	**Assessed Value Attributed to Project**	**Ad Valorem Property Tax**	**Yuba College Bonds (.026547%)**
014-XX	066-006	535.35	99.291	18.55%	454,945	84,379	843.79	22.40

Base Property Tax Value $843.79 (Step 2) + Yuba College Tax Base Value $22.40 (Step 3) = $866.19

Special District Charge Base Value $0.00 (Step 4) times 18.55% = $0.00

Total annual loss $866.19 times assumed 6-month loss = $433.10 (Step 5)

Project pays $433.10 in PILT to County (Step 6)

Year 2
Annual Property Tax Base (County and College) $866.19 times Assessor's Growth Factor of 2% = $883.51 (Step 1)

Annual Special District Base $0.00 x specified growth factor = $0.00 (Step 2)

$866.19 + $0.00 = $866.19 (Step 3)

Project pays $866.19 to County (Step 4)

This table is for illustration purposes only. It assumes that the sale of each parcel is proportional to the percentage of each parcel included in the Project footprint and that the proportionate value of the parcel for in-lieu payment is based on the assessed value prior to the sale. The figure also assumes that sale of the project percentage of each of the parcels is completed in the current tax year. Only new or additional assessments beyond those shown here and applied by the County prior to purchase of the property by the Project shall be included in the Project's PILT.

COLUSA COUNTY - Gross Potential Property Tax Loss Attributed to Project - 2024 Values								
Tax Year	Assumed PT Growth Factor	County	Yuba College Bonds (.026547%)	Schools (Incl. ERAF)	Special Districts	Colusa Ground-water Authority	City	Total
2024		$21,814	$ 2,176	$ 48,663	$ 6,758	$ 182	$ 4,731	$ 84,324
2025	2%	22,250	2,219	49,636	6,893	186	4,825	86,010
2026	2%	22,695	2,264	50,629	7,031	189	4,922	87,730
2027	2%	23,149	2,309	51,641	7,171	193	5,020	89,485
2028	2%	23,612	2,355	52,674	7,315	197	5,121	91,275
2029	2%	24,085	2,402	53,728	7,461	201	5,223	93,100
2030	2%	24,566	2,450	54,802	7,610	205	5,328	94,962
2031	2%	25,058	2,499	55,898	7,763	209	5,434	96,861
2032	2%	25,559	2,549	57,016	7,918	213	5,543	98,799
2033	2%	26,070	2,600	58,157	8,076	217	5,654	100,775
2034	2%	26,591	2,652	59,320	8,238	222	5,767	102,790
2035	2%	27,123	2,706	60,506	8,403	226	5,882	104,846
2036	2%	27,666	2,760	61,716	8,571	231	6,000	106,943
2037	2%	28,219	2,815	62,951	8,742	235	6,120	109,082
2038	2%	28,783	2,871	64,210	8,917	240	6,242	111,263
2039	2%	29,359	2,929	65,494	9,095	245	6,367	113,489
2040	2%	29,946	2,987	66,804	9,277	250	6,494	115,758
2041	2%	30,545	3,047	68,140	9,463	255	6,624	118,073
2042	2%	31,156	3,108	69,503	9,652	260	6,757	120,435
2043	2%	31,779	3,170	70,893	9,845	265	6,892	122,844
2044	2%	32,415	3,233	72,311	10,042	270	7,030	125,300
2045	2%	33,063	3,298	73,757	10,243	276	7,170	127,807
2046	2%	33,724	3,364	75,232	10,447	281	7,314	130,363
2047	2%	34,399	3,431	76,737	10,656	287	7,460	132,970
2048	2%	35,087	3,500	78,271	10,870	293	7,609	135,629
2049	2%	35,789	3,570	79,837	11,087	298	7,761	138,342
2050	2%	36,504	3,641	81,433	11,309	304	7,917	141,109
2051	2%	37,234	3,714	83,062	11,535	311	8,075	143,931
2052	2%	37,979	3,788	84,723	11,766	317	8,236	146,810
2053	2%	38,739	3,864	86,418	12,001	323	8,401	149,746
2054	2%	39,513	3,941	88,146	12,241	330	8,569	152,741
								$3,573,589

Distribution of Property Tax Attributed to Schools:

Above calculation includes the AB8 share of property taxes that go to schools in the percentages below.

Note: Property tax loss for schools exists in Year 1 only, the state makes up the property tax loss in the Local Control Funding Formula in subsequent years.

Tax Year	Princeton Unified (1.1424%)	Stonyford Unified (0.2625%)	Yuba College (12.4388%)	Colusa Unified (10.2363%)	Maxell Unified (3.7989%)	Pierce Unified (9.7218%)	Williams Unified (8.6720%)	Supt. Schools-Glenn (0.2788%)	Supt. Schools-Colusa (1.1058%)	Schools ERAF (11.7125%)	Total Schools
2024	$ 936	$ 215	$ 10,196	$ 8,390	$ 3,114	$ 7,969	$ 7,108	$ 229	$ 906	$ 9,600	$ 48,663

ANNEX 1

to EXHIBIT B

Project Site Map

FOR COLUSA COUNTY:

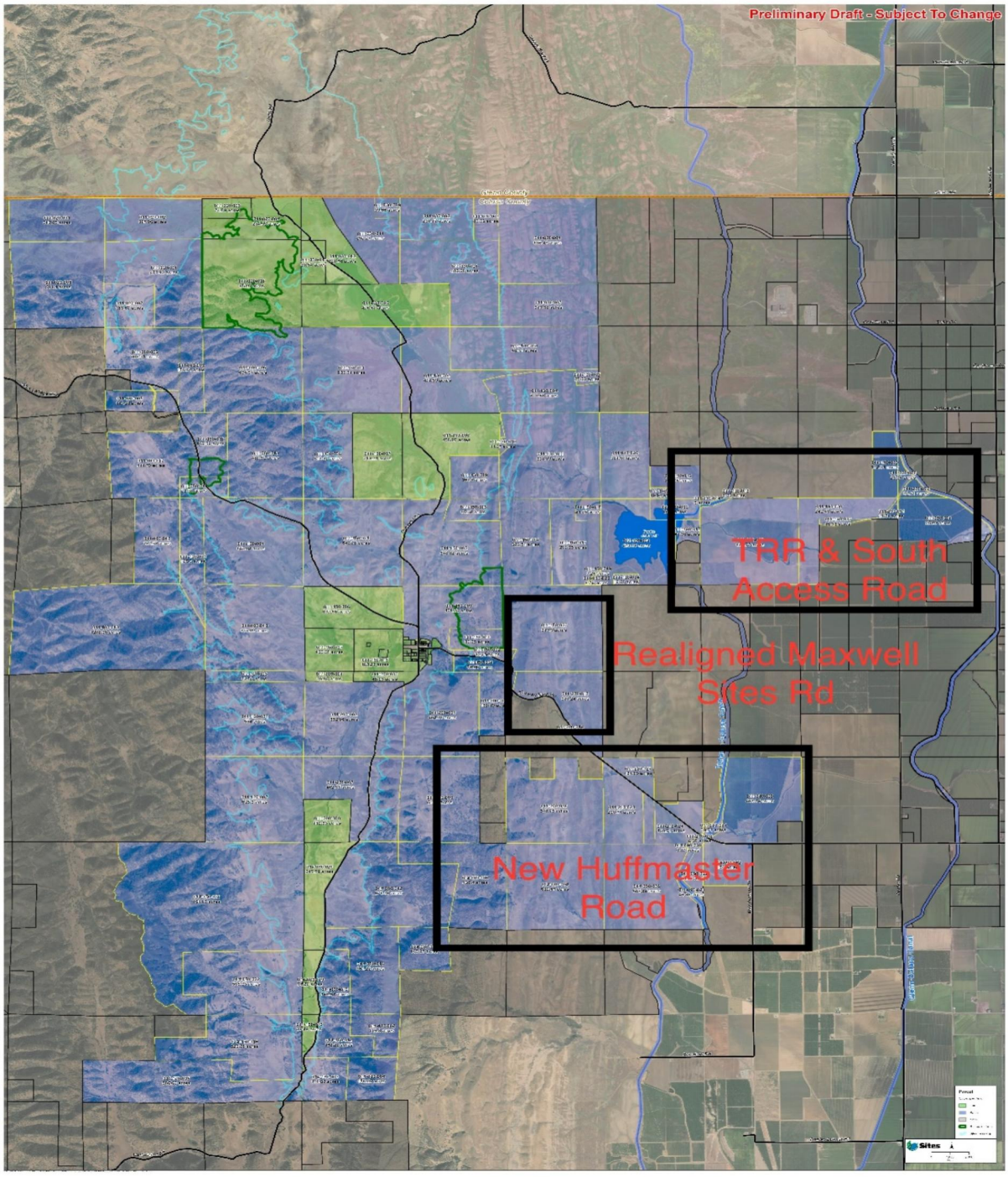

FOR GLENN COUNTY:

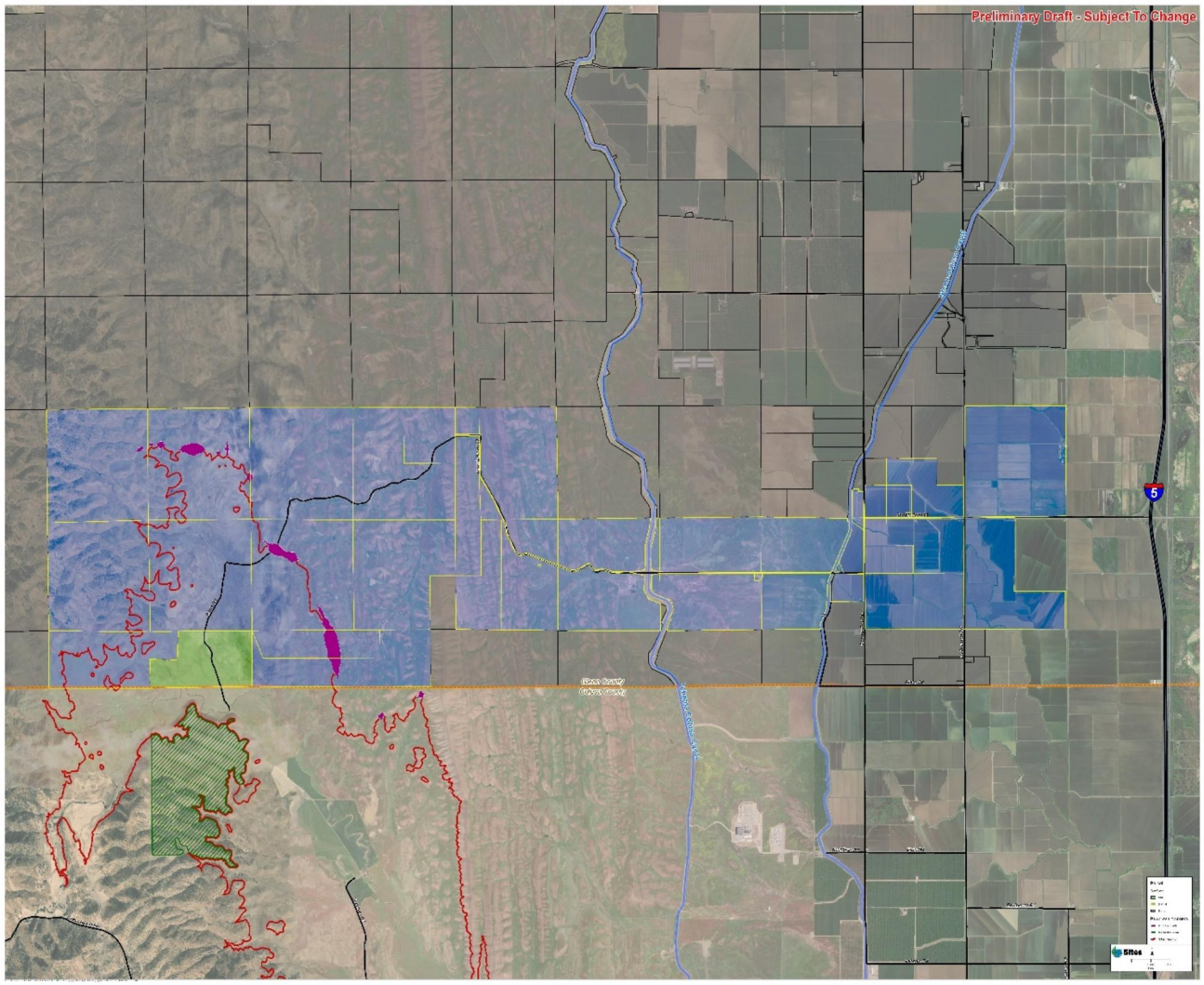

EXHIBIT C

Local Roads and Crossing Structures

					Existing					Proposed					Type of Use			
County	Road Name	Proposed Work	Length of Road Affected (miles)	Duration of Use	Surface Type	# of Lanes/Shld	Lane Width (ft)	Shld Width (ft)	Road Width (ft)	Surface Type	# of Lanes/Shld	Lane Width (ft)	Shld Width (ft)	Road Width (ft)	Public/local Road	Construction Access	Maintenance Access	Recreational
Glenn	County Road 68	Existing road improvements	7.65	6-7 years	Paved asphalt	2	10-11	0-0.5	20-23	Paved asphalt	2	12	4	32	x	x		
Glenn	County Road 69	Existing road improvements	2.11	6-7 years	Paved asphalt	2	8-12	n/a	16-24	Paved asphalt	2	12	4	32	x	x		
Glenn	County Road D	Existing road improvements	0.5	6-7 years	Paved asphalt	2	12	n/a	24	Paved asphalt	2	12	4	32	x	x		
Colusa	Delevan Road	Existing road improvements	2.19	6-7 years	Paved asphalt	2	10-12	0-0.5	20-23	Paved asphalt	2	12	4	32	x	x		
Colusa	Maxwell Sites Road	Existing road repair	1.75	6-7 years	Paved asphalt	2	12	0.5	24-25	Unpaved aggregate/gravel	n/a	24	n/a	24		x	x	
Colusa	Maxwell Sites Road	Existing road repair	2.39	4-5 years	Paved asphalt	2	12	0.5	24-25	Paved asphalt	2	12	0.5	24-25	x	x		
Colusa	Sites Lodoga Road	New road	6.22	4-5 years	Paved asphalt	2	12	0-2	24-28	Paved asphalt	2	12	4	32	x	x		
Colusa	Sites Lodoga Temporary Detour Road	New road (Temporary Detour	1.23	2-3 years	n/a	n/a	n/a	n/a	n/a	Paved asphalt	2	12	4	32	x			x
Colusa	Huffmaster Road Realignment	New road	6.35	4-5 years	Unpaved aggregate/gravel	n/a	15	n/a	15	Unpaved aggregate/gravel	1	12	1.5	15	x			
Colusa	Comm Road	New road	1.61	1-2 years	Unpaved dirt/trail	n/a	12	n/a	12	Unpaved aggregate/gravel	1	12	1.5	15			x	
Colusa	Day Use Boat Ramp Access	New road	n/a	n/a	n/a	n/a	n/a	n/a	n/a	Paved asphalt	2	15	n/a	30				x
Colusa	Peninsula Hills Recreational Road	New road	n/a	n/a	n/a	n/a	n/a	n/a	n/a	Paved asphalt	2	15	n/a	30				x
Colusa	Stone Corral Recreational Access Road	New road	n/a	n/a	n/a	n/a	n/a	n/a	n/a	Paved asphalt	2	15	n/a	30				x
Yolo	Road 7A	Existing road repair	0.25	2 years	Paved asphalt	n/a	16-20	n/a	16-20	Paved asphalt	n/a	20	n/a	20	x	x		
Yolo	Road 8	Existing road repair	0.88	2 years	Paved asphalt	2	12	0-3	24-30	Paved asphalt	2	12	0-3	30	x	x		
Yolo	Road 89A	Existing road repair	0.26	2 years	Paved asphalt	n/a	16-19	n/a	16-19	Paved asphalt	n/a	20	n/a	20	x	x		
Yolo	Road 90	Existing road repair	0.68	2 years	Paved asphalt	n/a	22-24	n/a	22-24	Paved asphalt	n/a	20	2	24	x	x		
Yolo	Road 99W	Existing road repair	0.95	2 years	Paved asphalt	2	12	6-11	45	Paved asphalt	2	12	8-11	45	x	x		

Structure/Crossing	Route	Condition	Proposed Work	Design Live Loading
North Access Road (near Road 69 split)*	Road 69	Existing Bridge - Condition Unknown Major modification required (Existing Width significantly less than required)	New wider bridge accommodating design loading.	HL93 and Permit design Load
Tehama-Colusa Canal*	Road 69	Existing Bridge - Condition Unknown Major modification required (Existing Width significantly less than required)	New wider bridge accommodating design loading.	HL93 and Permit design Load
East of Tehama-Colusa Canal	Road 69	Existing Culvert - Condition Unknown	New culvert accommodating an improved widen road.	HL93 and Permit design Load
West of Glenn-Colusa Canal	Road 69	Existing Culvert - Condition Unknown Major modification required (Existing Width significantly less than required)	New culvert accommodating an improved widen road.	HL93 and Permit design Load
Glenn-Colusa Canal*	Road 69	Existing Bridge - Condition Unknown Major modification required (Existing Width significantly less than required)	New wider bridge accommodating design loading.	HL93 and Permit design Load
Near the intersection of Road D/Road 68	Road D	Existing Culvert - Condition Unknown Major modification required (Existing Width significantly less than required)	New culvert accommodating an improved widen road.	HL93 and Permit design Load
Near the intersection of Road D/Road 68*	Road D	Existing Culvert - Condition Unknown Major modification required (Existing Width significantly less than required)	New wider bridge accommodating design loading.	HL93 and Permit design Load
West of the intersection of Road 68/Road F	Road 68	Existing Culvert - Condition Unknown	Potentially new culvert accommodating design loading.	HL93 and Permit design Load
West of I-5*	Road 68	Existing Bridge - Condition Unknown	Potentially new bridge accommodating design loading.	HL93 and Permit design Load
Glenn-Colusa Canal*	Delevan Road Extension	Existing Bridge - Condition Unknown Major modification required (Existing Width significantly less than required)	New wider bridge accommodating design loading.	HL93 and Permit design Load
Delvan Road (Private) over Unnamed Creek*	Delevan Road Extension	Existing Bridge - Condition Unknown Major modification required (Existing Width significantly less than required)	New wider bridge accommodating design loading.	HL93 and Permit design Load
Sites Reservoir West Bridge*	Sites Lodoga Road Realignment	New Bridge	New bridge accommodating design criteria and loading	HL93 and Permit design Load
Sites Reservoir East Bridge*	Sites Lodoga Road Realignment	New Bridge	New bridge accommodating design criteria and loading	HL93 and Permit design Load
Bird Creek (22C-0039)*	Road 90	Existing Bridge - Condition Unknown	Potentially new bridge accommodating design loading.	HL93 and Permit design Load

*Bridge improvements will be designed to Caltrans Standards (Caltrans review and approval will be coordinated by County)

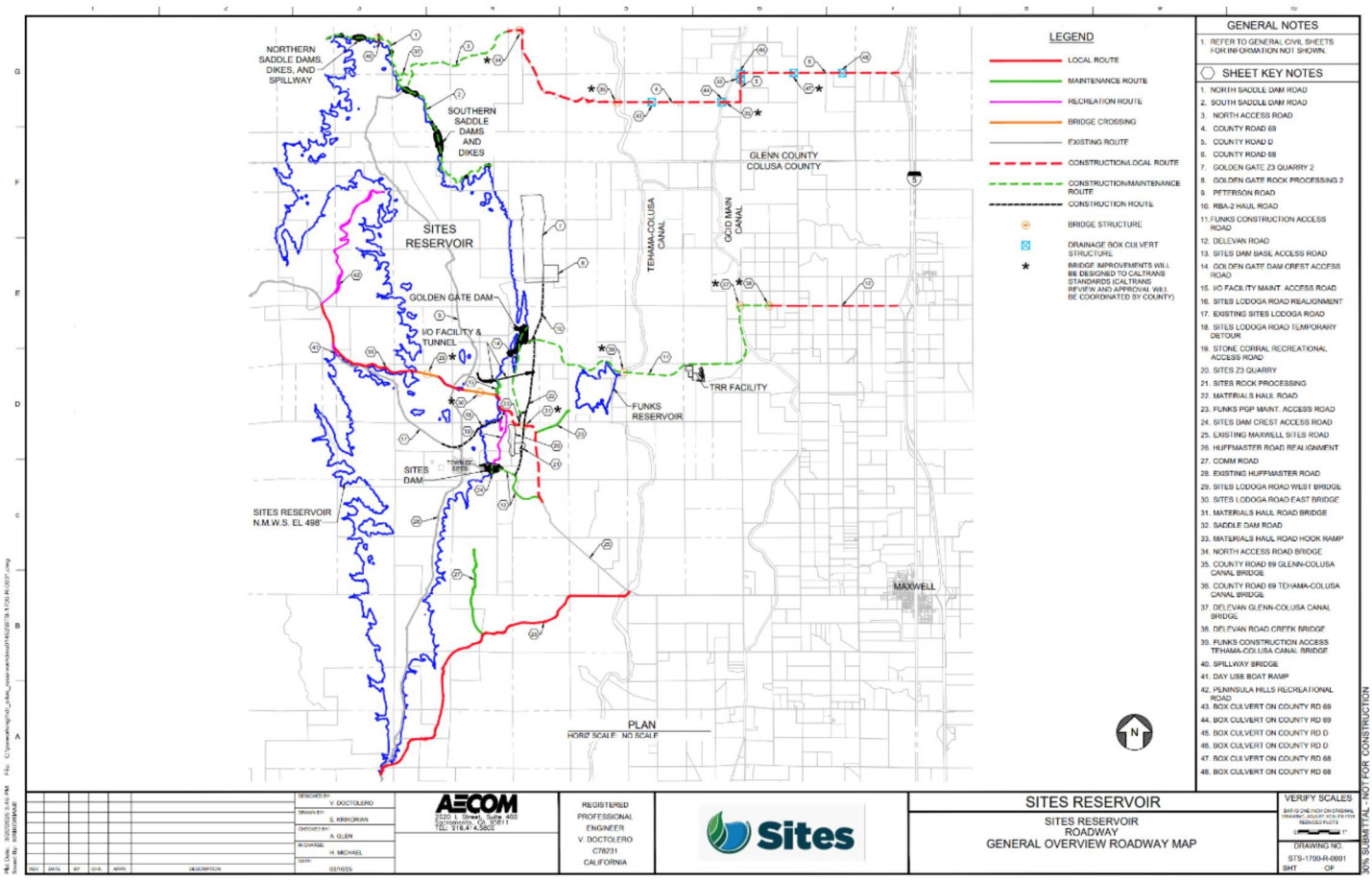
NORTHERN SADDLE DAMS, DIKES, AND SPILLWAY
SOUTHERN SADDLE DAMS AND DIKES
SITES RESERVOIR
GOLDEN GATE DAM
I/O FACILITY & TUNNEL
SITES DAM
SITES RESERVOIR N.M.W.S. EL 498'
TEHAMA-COLUSA CANAL
OCID MAIN CANAL
GLENN COUNTY
COLUSA COUNTY
FUNKS RESERVOIR
TRR FACILITY
MAXWELL
PLAN
HORIZ SCALE: NO SCALE
LEGEND
LOCAL ROUTE
MAINTENANCE ROUTE
RECREATION ROUTE
BRIDGE CROSSING
EXISTING ROUTE
CONSTRUCTION/LOCAL ROUTE
CONSTRUCTION/MAINTENANCE ROUTE
CONSTRUCTION ROUTE
BRIDGE STRUCTURE
DRAINAGE BOX CULVERT STRUCTURE
BRIDGE IMPROVEMENTS WILL BE DESIGNED TO CALTRANS STANDARDS (CALTRANS REVIEW AND APPROVAL WILL BE COORDINATED BY COUNTY)
GENERAL NOTES
1. REFER TO GENERAL CIVIL SHEETS FOR INFORMATION NOT SHOWN.
SHEET KEY NOTES
1. NORTH SADDLE DAM ROAD
2. SOUTH SADDLE DAM ROAD
3. NORTH ACCESS ROAD
4. COUNTY ROAD 69
5. COUNTY ROAD D
6. COUNTY ROAD 68
7. GOLDEN GATE Z3 QUARRY 2
8. GOLDEN GATE ROCK PROCESSING 2
9. PETERSON ROAD
10. RBA-2 HAUL ROAD
11. FUNKS CONSTRUCTION ACCESS ROAD
12. DELEVAN ROAD
13. SITES DAM BASE ACCESS ROAD
14. GOLDEN GATE DAM CREST ACCESS ROAD
15. I/O FACILITY MAINT. ACCESS ROAD
16. SITES LODOGA ROAD REALIGNMENT
17. EXISTING SITES LODOGA ROAD
18. SITES LODOGA ROAD TEMPORARY DETOUR
19. STONE CORRAL RECREATIONAL ACCESS ROAD
20. SITES Z3 QUARRY
21. SITES ROCK PROCESSING
22. MATERIALS HAUL ROAD
23. FUNKS PGP MAINT. ACCESS ROAD
24. SITES DAM CREST ACCESS ROAD
25. EXISTING MAXWELL SITES ROAD
26. HUFFMASTER ROAD REALIGNMENT
27. COMM ROAD
28. EXISTING HUFFMASTER ROAD
29. SITES LODOGA ROAD WEST BRIDGE
30. SITES LODOGA ROAD EAST BRIDGE
31. MATERIALS HAUL ROAD BRIDGE
32. SADDLE DAM ROAD
33. MATERIALS HAUL ROAD HOOK RAMP
34. NORTH ACCESS ROAD BRIDGE
35. COUNTY ROAD 69 GLENN-COLUSA CANAL BRIDGE
36. COUNTY ROAD 69 TEHAMA-COLUSA CANAL BRIDGE
37. DELEVAN GLENN-COLUSA CANAL BRIDGE
38. DELEVAN ROAD CREEK BRIDGE
39. FUNKS CONSTRUCTION ACCESS TEHAMA-COLUSA CANAL BRIDGE
40. SPILLWAY BRIDGE
41. DAY USE BOAT RAMP
42. PENINSULA HILLS RECREATIONAL ROAD
43. BOX CULVERT ON COUNTY RD 69
44. BOX CULVERT ON COUNTY RD 69
45. BOX CULVERT ON COUNTY RD D
46. BOX CULVERT ON COUNTY RD D
47. BOX CULVERT ON COUNTY RD 68
48. BOX CULVERT ON COUNTY RD 68
DESIGNED BY V. DOCTOLERO
DRAWN BY E. KRKORIAN
CHECKED BY A. GLEN
IN CHARGE H. MICHAEL
DATE 03/16/25
AECOM
2020 L Street, Suite 400
Sacramento, CA 95811
TEL: 916.414.3800
REGISTERED PROFESSIONAL ENGINEER
V. DOCTOLERO
C78231
CALIFORNIA
Sites
SITES RESERVOIR
SITES RESERVOIR ROADWAY
GENERAL OVERVIEW ROADWAY MAP
VERIFY SCALES
DRAWING NO. STS-1700-R-0001
SHT OF
30% SUBMITTAL - NOT FOR CONSTRUCTION

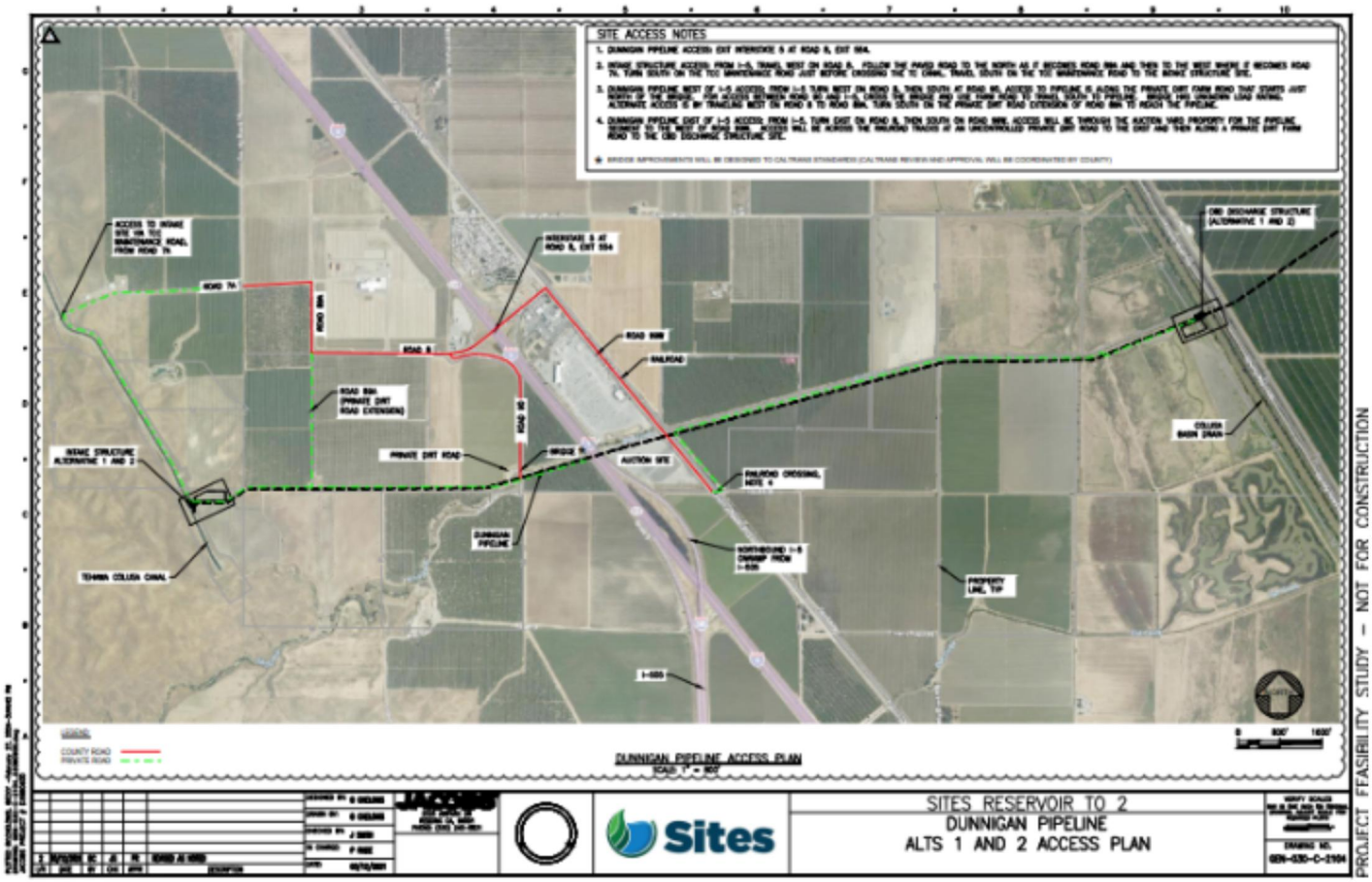
SITE ACCESS NOTES
DUNNIGAN PIPELINE ACCESS PLAN
SCALE 1" = 800'
SITES RESERVOIR TO 2
DUNNIGAN PIPELINE
ALTS 1 AND 2 ACCESS PLAN
Sites
PROJECT FEASIBILITY STUDY – NOT FOR CONSTRUCTION

Exhibit D

New Local Roads and Crossing Structures – Design, Construction, Maintenance, and County Acceptance Requirements

1. Design Standards and Requirements

1.1 All New Roads and Crossing Structures constructed by the Authority within the County's public right of way shall be designed and engineered in compliance with the latest edition (as of 2025) of the following:

(a) Colusa County Standards and Specifications;
(b) applicable Caltrans/AASHTO design and safety standards, including load rating requirements;
(c) applicable federal and state accessibility standards;
(d) site-specific geotechnical and hydrologic conditions, as approved by the County Engineer.

1.2 The Authority shall submit detailed plans and specifications for New Roads and Crossing Structures that are within the public right of way for review and written approval by the County Engineer prior to commencement of construction.

2. Construction Requirements

2.1 The Authority shall construct the New Roads and Crossing Structures in compliance with the approved plans and specifications and in accordance with all applicable laws, ordinances, and regulations.

2.2 The Authority shall ensure that all contractors and subcontractors are properly licensed and bonded in accordance with California law.

2.3 The Authority shall be responsible for all testing and quality control during construction, including compaction testing, concrete strength testing, and other materials testing as required by the County Engineer.

3. Inspection and Testing Rights

3.1 The County shall have the right, but not the obligation, to inspect the New Roads and Crossing Structures at any time during construction to confirm compliance with the approved plans, specifications, or standards.

3.2 The Authority shall provide the County Engineer or authorized representatives with reasonable access to the construction site and all relevant records, test results, and certifications.

3.3 If the County determines that any aspect of the work does not comply with the approved plans, specifications, or standards, the Authority shall promptly correct such deficiencies at its sole cost.

4. Ownership Transfer and Acceptance

4.1 Upon completion of construction, the Authority shall provide to the County:

(a) as-built drawings certified by a licensed civil engineer;
(b) a complete set of maintenance manuals and warranties for all structural components;
(c) written certification from a licensed engineer that the New Roads and Crossing Structures were

constructed in accordance with approved plans and applicable standards;
(d) proof of all required environmental clearances and permits for the New Roads and Crossing Structures.

4.2 The County shall conduct a final inspection of the New Roads and Crossing Structures. If the New Roads and Crossing Structures are found to meet the requirements of this Exhibit D, the County shall issue a Notice of Acceptance, at which time ownership and maintenance responsibility shall transfer to the County.

4.3 The Authority shall warrant all New Roads and Crossing Structures against defects in materials and workmanship for a period of one year from the date of Notice of Acceptance. During this period, The Authority shall, at its own expense, repair or replace any defective work to the satisfaction of the County.

4.4 The County's Notice of Acceptance shall represent full and complete ownership transfer of the specific New Road and Crossing Structure to the County. The Authority and County agree that the County may issue Notice(s) of Acceptance of New Roads and Crossing Structures which may occur intermittently and as portions of all New Roads and Crossing Structures are complete.

5. Maintenance Prior to Transfer

5.1 Until issuance of the Notice of Acceptance for any portion, the Authority shall be solely responsible for the maintenance, repair, and security of the New Roads and Crossing Structures, including erosion control and stormwater management.

6: Special Provisions for the Sites Lodoga Road Bridge

6.1 Enhanced Design Requirements - The Sites Lodoga Road Bridge ("Bridge") shall be designed to meet the minimum design life expectancy of 75 years for reinforced concrete structures and shall incorporate features that minimize long-term maintenance, including but not limited to:

- Corrosion-resistant materials (e.g., epoxy-coated or stainless-steel rebar)
- Deck and joint systems engineered to minimize water infiltration
- Redundant structural capacity to accommodate future loading standards
- Flood and scour resilience consistent with Caltrans' guidance for critical infrastructure

The Bridge design shall comply with the most current (as of 2025) Caltrans Bridge Design Manual and AASHTO LRFD Bridge Design Specifications.

6.2 Independent Peer Review - Prior to final design approval for the Bridge, the Authority shall retain an independent, qualified bridge engineering firm (approved by the County Engineer) to conduct a third-party peer review. The peer reviewer shall certify that the final Bridge design:

- Meets or exceeds applicable standards set out in this Exhibit D
- Reasonably minimizes anticipated life-cycle maintenance costs
- Appropriately accounts for site-specific risks including flooding, seismic activity, and geotechnical conditions

6.3 Transfer Conditions - In addition to the general transfer conditions specified in Section 4, the following must be provided:

- A complete Bridge Maintenance Manual with recommended inspection intervals, materials specifications, and preventive maintenance schedules
- A certified cost estimate of anticipated life-cycle maintenance for the Bridge over a 75-year horizon
- All manufacturer and contractor warranties and any Bridge instrumentation records

6.4 Extended Warranty and Post-Transfer Support – The Authority shall provide a five-year extended warranty for structural defects in the Bridge, commencing upon County's Notice of Acceptance. During this period, the Authority shall:

- Conduct annual inspections and submit findings to the County
- Repair or replace any components deemed to have material defects or premature deterioration
- Coordinate with the County to address any identified deficiencies at no cost to the County

6.5 County Maintenance Support Contribution - As a condition of Notice of Acceptance, the Authority shall:

- Establish a Bridge Maintenance Fund or make a one-time lump-sum payment to the County in an amount to be mutually agreed upon, based on the Bridge estimated life-cycle maintenance cost
- The purpose of this contribution is to defray the County's long-term maintenance burden attributable to the Bridge

NOTICE OF PUBLIC HEARING: FOR THE COUNTY OF COLUSA AND SITES PROJECT AUTHORITY DEVELOPMENT AGREEMENT

NOTICE IS HEREBY GIVEN THAT the Colusa County Board of Supervisors will conduct a Public Hearing on Tuesday, November 4, 2025, beginning at 9:30 a.m. in the Board of Supervisors Chambers located at 546 Jay Street, Suite 108, Colusa, CA, to consider the following:

Public Hearing: The Board of Supervisors will hold a public hearing to consider adopting an Ordinance approving the Development Agreement by and between the County of Colusa and Sites Project Authority for the development and operation of the Sites Reservoir Project. On October 1, 2025, the Colusa County Planning Commission adopted a Resolution recommending the approval of the Development Agreement. The State of California Development Agreement Act authorizes the County to enter into binding development agreements establishing certain development rights in real property with persons having legal or equitable interests in such property. All persons are invited to attend and be heard.

Project Location/Description: The Sites Reservoir Project, a proposed 1.3 – 1.5 million acre-foot off-stream reservoir, will be located approximately 10 miles west of the town of Maxwell, California, and will provide water storage and supply for the entities that pay to participate and receive benefits, including the County of Colusa, as well as provide public benefits, including environmental water supply, recreation, and regional flood control benefits. The proposed Development Agreement outlines County procedures and actions, purpose and applicability of the Agreement, best management practices, community benefits, assurances by both parties, impacts to existing and new County roads and crossing structures, default and general provisions.

If you have questions or concerns regarding this matter, or would like to submit comments, you may do so to the following: Secretary to the Planning Commission, 1213 Market Street, Colusa, CA (530)458-0480, or by e-mail at xfowler@countyofcolusa.com.

If you challenge the proposed project or environmental determination in court, you may be limited to raising only those issues you or someone else raised at the public hearing described in this notice, or in written correspondence delivered at, or prior to, the public hearing.

Dated: October 15, 2025

By: ORIGINAL SIGNED
Patricia Rodriguez, Deputy Cler **10/24/2025 · CCPR**k

RESOLUTION NO. 25-007

RESOLUTION OF THE COLUSA COUNTY PLANNING COMMISSION RECOMMENDING THAT THE BOARD OF SUPERVISORS ADOPT AN ORDINANCE APPROVING THE DEVELOPMENT AGREEMENT BETWEEN THE COUNTY OF COLUSA AND SITES PROJECT AUTHORITY, FOR THE DEVELOPMENT AND OPERATION OF THE SITES RESERVOIR PROJECT

WHEREAS, Sites Project Authority (Applicant) has requested a development agreement for the construction, operation, and maintenance of the Sites Reservoir Project ("Project"), a 1.3 – 1.5 million acre-foot off-stream reservoir, located approximately 10 miles west of the unincorporated town of Maxwell, within Colusa County;

WHEREAS, the Applicant has applied to enter into a development agreement (Development Agreement) with the County for the Project, pursuant to Section 44.1.00 *et seq.* of the County Code, which establishes the rights and obligations of the Applicant and the County relating to the development of the Project, secures Applicant's vested right to develop the Project in accordance with the terms of the Development Agreement, and establishes community benefits and public benefits that the Project will provide to the County;

WHEREAS, the Sites Project Authority is considered a Lead Agency under the California Environmental Quality Act (CEQA) and the U.S. Department of Interior, Bureau of Reclamation is the lead agency under the National Environmental Policy Act (NEPA) for this Project and has determined that an Environmental Impact Report (EIR) /Environmental Impact Statement (EIS) was necessary to fully review and consider all potentially significant impacts for the Project;

WHEREAS, a Revised Draft Environmental Impact Report/Supplemental Draft Environmental Impact Statement (RDEIR/SDEIS) on November 12, 2021, and a Final Environmental Impact Report/Environmental Impact Statement (Final EI/EIS) on November 2, 2023. The RDEIR/SDEIS and Final EIR/EIS include various Project alternatives, including two alternatives (Alternative 1 and 3) that include Project Facilities and potential mitigation elements involving placing lands in conservation easement within Colusa County. On November 17, 2023, the Authority certified the Final EIR/EIS and took various related actions, including approving Alternative 3 as the Project for implementation; and

WHEREAS, the Authority and the County desire to see the Project advance in a manner that will achieve its objectives, address impacts to affected County roads, adhere to various Best Management Practices (BMPs) outlined in the Final EIR/EIS, and promote certain shared goals such as strengthening local workforce training and development, and contributing sales tax revenues to the local economy. Additionally, the Authority seeks, through mutual agreement with the County, to identify and mitigate negative impacts to the County that were not identified in the Final EIR/EIS that result from the construction and operation of the Project; and

WHEREAS, Section 44-1.100.010 of the County Code requires that development agreements are approved by the Board of Supervisors with consideration to the review and recommendation of the Planning Commission.

I. NOW, THEREFORE, BE IT RESOLVED that the Colusa County Planning Commission, based on facts contained within the Planning Staff's report on the Project (including, without limitation, the draft Development Agreement and draft Ordinance for adoption of the

Development Agreement), all public testimony, all other written and oral testimony, and totality of the public record of the Project makes the following findings:

A. The Development Agreement detailed in Exhibit "A" attached hereto and incorporated by reference is consistent with the General Plan, the County Code, and all other applicable plans or regulations; the Development Agreement is in conformance with the public convenience and general welfare of persons residing in the immediate area and will not be detrimental or injurious to property or persons in the general neighborhood or to the general welfare of the residents of the County as a whole; the Development Agreement will promote the orderly development of property or the preservation of property values; the Development Agreement specifies the duration of the agreement, the permitted uses of the property, the density or intensity of use, the maximum height and size of proposed buildings, and provisions for reservation or dedication of land for public purposes; and the Development Agreement is consistent with the requirements of State law, including Government Code Sections 65864 through 65869.5.

II. NOW, THEREFORE, BE IT FURTHER RESOLVED that based upon the findings of Section I of this Resolution, the Colusa County Planning Commission recommends to the Colusa County Board of Supervisors that the Board approve the proposed Development Agreement between the County of Colusa and Sites Project Authority for the Project.

PASSED AND ADOPTED this 1st day of October, 2025, by the following vote:

AYES: Commissioners Dave McCullough, Heath Krug, Gerry Nall, Kirk Pendleton and Elizabeth Yerxa.

NOES: None.

ABSENT: None.

Heath Krug, Chair, Planning Commission

ATTEST: Xzandrea Fowler, Secretary
to the Colusa County Planning Commission

Ann Nordyke, Chief Deputy Clerk

APPROVED AS TO FORM

Jennifer Sutton, Sr. Deputy County Counsel

EXHIBIT A

DEVELOPMENT AGREEMENT

by and between

THE COUNTY OF COLUSA

and

Sites Project Authority

dated as of

_____, 2025

EXHIBIT A

DEVELOPMENT AGREEMENT

TABLE OF CONTENTS

Page

RECITALS 1

AGREEMENT 3

1. DEFINITIONS 3

2. PURPOSE AND INTENT; BEST MANAGEMENT PRACTICES 7

2.1 County Procedures and Actions 7
2.1.1 County Planning Commission Action 7
2.1.2 Board of Supervisors Action 7
2.2 State Enabling Legislation 7
2.3 Purpose of this Agreement 7
2.3.1 Public Benefits 7
2.3.2 Authority Objectives 7
2.3.3 Mutual Objectives 8
2.4 Applicability of the Agreement 8
2.5 Best Management Practices. 8
2.5.1 Commitment .....
2.5.2 Applicable BMPs 9
2.5.3 Limitations. 9
2.5.3.1 Changes to BMPs 9
2.5.3.2 Landowner Concerns 9
2.5.3.3 Material Change to the Covered BMPs 10
2.5.3.4 Authority 10
2.6 Community Benefits 10

3. AGREEMENT AND ASSURANCES 10

3.1 Agreement and Assurance on the Part of the Authority 10
3.1.1 Project Development 11
3.1.2 Agreement for Design, Construction, Operation and Maintenance 11
3.1.3 Intentionally Deleted 11
3.1.4 Wind-Up Following Termination Prior to Completion 11
3.1.5 Tax Forms 11
3.1.6 Impact Alleviation Agreements. Maxwell Unified School District; Maxwell Fire District, Maxwell Public Utilities District, Maxwell Parks and Recreation District, Colusa County Sheriff, Colusa County Public Works 11
3.1.7 Local Hiring 12
3.2 Impacts to County Roads and Crossing Structures and New Roads. 12

3.2.1 Road and Crossing Structure Repairs 12
3.2.2 Road and Crossing Structure Improvements 12
3.2.3 New Roads 12
3.2.4 Permits, Cooperation and Implementation. 13
3.2.5 Design and Improvement Standards 14
3.2.6 Condition Assessment 15
3.2.7 Corrective Action 15
3.2.8 Reimbursement Procedure 16
3.3 Agreement and Assurances on the part of the County 16
3.3.1 Entitlement to Develop 16
3.3.2 Consistency in Applicable Rules 16
3.3.3 No Warranty of Completion 17
3.3.4 Changes in Applicable Rules 17
3.3.4.1 Nonapplication of Changes in Applicable Rules 17
3.3.4.2 Changes in Uniform Codes 17
3.3.4.3 Changes Mandated by Federal or State Law 17
3.3.5 Subsequent Development Review 17
3.3.6 Intentionally Deleted 18
3.3.7 Effective Development Standards 18
3.3.8 Use of Property 18
3.3.9 Moratoria or Interim Control Ordinances 18
3.3.10 Infrastructure Financing 18
3.3.11 Impact Fees 18
3.3.12 Processing Fees 18
3.3.13 Timeframes and Staffing for Processing and Review 19
3.3.14 Payment in Lieu of Taxes 19
3.3.15 Ownership of Project; Prioritization of Local Agencies 20
3.3.16 Sales Tax / Office 20
3.3.17 [NOTE: COLUSA ONLY] [Memorandum of Understanding 20

4. DEFAULT PROVISIONS 21

4.1 Default By the Authority 21
4.1.1 Default 21
4.1.2 Notice of Default 21
4.1.3 Failure to Cure Default Procedure 22
4.1.4 Action by Board of Supervisors 22
4.1.5 Dispute Resolution 22
4.1.6 Termination or Modification of Agreement 22
4.2 Default By The County 22
4.2.1 Default 22
4.2.2 Notice of Default 22
4.2.3 Termination or Modification of Agreement 23
4.3 No Monetary Damages 23

5. GENERAL PROVISIONS 23

EXHIBIT A

5.1 Effective Date 23
5.2 Term 23
5.3 Enforced Delay; Extension of Time of Performance 23
5.4 CEQA Compliance 24
5.5 Dispute Resolution 24
5.5.1 Informal Dispute Resolution Before Mediation 24
5.5.2 Mediation. 25
5.5.3 Conduct of Mediation. 25
5.6 Applicable Law 26
5.7 Amendments 26
5.8 Assignment 26
5.9 Covenants 26
5.10 Relationship of the Parties 26
5.11 Notices 26
5.12 Recordation 27
5.13 Constructive Notice and Acceptance 27
5.14 Successors And Assigns 27
5.15 Severability 27
5.16 Time of the Essence 27
5.17 Waiver 27
5.18 No Third Party Beneficiaries 28
5.19 Entire Agreement 28
5.20 Legal Advice, Neutral Interpretation, Headings, Table of Contents, and Index 28
5.21 Discretion to Encumber 28
5.22 Expedited Processing 28
5.23 Counterparts; Electronic Execution 28
5.24 Controlling Law Venue 28

EXHIBITS

EXHIBIT A Permit Requirement Matrix
EXHIBIT B Project Specific Information and Example of Calculation for Payment in Lieu of Taxes
ANNEX 1 Project Site Map
EXHIBIT C Local Roads and Crossing Structures - Designations
EXHIBIT D New and Improved Local Roads and Crossing Structures – Design, Construction, Maintenance, and County Acceptance Minimum Requirements

DEVELOPMENT AGREEMENT

This Development Agreement ("Agreement"), dated as of _____, 202[5], is entered into by and between the COUNTY OF COLUSA ("County"), and Sites Project Authority (the "Authority") (individually, a "Party"; collectively, the "Parties").

RECITALS

WHEREAS, the County is a political subdivision of the State of California; and

WHEREAS, the Authority is a joint powers agency created under California Government Code Sections 6500 et seq., was formed pursuant to the Sites Project Authority Joint Exercise of Powers Agreement, as such agreement may be amended and restated from time to time, and pursuant to which the formation of the Sites Reservoir Committee was authorized (the "JPA Agreement"), and is governed by Phase 3, 4, 5 Bylaws of the Sites Project Authority (the "Authority Bylaws"); and

WHEREAS, California Government Code Section 6508 provides that a joint powers agency shall possess and may exercise the common powers of its member agencies as specified in the joint powers agreement; and

WHEREAS, the Authority was formed in 2010 by its member agencies, all of whom are public agencies within the Sacramento River Watershed, for the following purpose: to design, permit, finance, construct, and ultimately own and operate the Sites Reservoir Project (the "Project"), a proposed 1.3-1.5 million acre-foot off-stream reservoir located approximately 10 miles west of the town of Maxwell, California. Once constructed, the Sites Reservoir Project will provide water storage and supply for the entities that pay to participate and receive benefits, including certain Authority members and other municipal entities and special districts (collectively, the "Participants"), as well as provide public benefits including environmental water supply, recreation, and regional flood control benefits; and

WHEREAS, the Authority intends to enter into a certain Benefits and Obligations Contract (the "Benefits and Obligations Contract") with the Participants and the State of California Department of Water Resources, which will detail, among other things, the obligations of the Authority to build and maintain the Project and obligations to restore the Project site in the event the Project is not completed; and

WHEREAS, certain facilities which will be used for the Project are located within the County, including facilities, related to the Tehama-Colusa and Corning Canals, Funks Reservoir and Associated Works which serve the irrigation needs of the water districts within the Sacramento Canals Unit of the Central Valley Project; and]

WHEREAS, the operation of the Project will significantly rely on utilization of existing conveyance facilities that are located within the County to divert water from the Sacramento River for storage into the reservoir and for releases along with impeding natural flow within the Funks Creek and Stone Corral Creek; and

WHEREAS, in order to construct and operate the Project, the Authority will need the assistance, permission, and cooperation of the County on a number of activities including planning, design, permitting, construction of the new infrastructure and facility improvements, the potential mitigation of certain project environmental effects which may require the placement of lands within the County in conservation easement, and integration of facilities in the County, as well as access to certain services provided in the County including public safety services in the area, including in recreational areas, in or directly adjacent to the Project; and

WHEREAS, the County and the Authority recognize that development of the Project within the County is anticipated to provide much-needed new water supplies in the State of California and should contribute significantly to the economy of the County, including through the measures, programs, and projects developed by the Local Community Working Group, and by establishing goals, incentives and preferences for local hiring and purchasing as described in Section 2.6 of this Agreement; and

WHEREAS, the County and the Authority recognize that certain Memorandum of Understanding between Colusa County and the Sites Project Authority Regarding Area of Origin Water Rights Claims to Funks and Stone Corral Creeks, and Related Matters, dated as of November 22, 2021; and

WHEREAS, the Authority is the lead agency for the Project under the California Environmental Quality Act (Pub. Res. Code § 21000, *et seq.*)("CEQA") and the U.S. Department of the Interior, Bureau of Reclamation ("Reclamation") is the lead agency under the National Environmental Policy Act ("NEPA"); and

WHEREAS, over the past several years, the Authority has issued various environmental review documents for the Project pursuant to CEQA and NEPA, including a Revised Draft Environmental Impact Report/Supplemental Draft Environmental Impact Statement ("RDEIR/SDEIS") on November 12, 2021, and a Final Environmental Impact Report/Environmental Impact Statement ("Final EIR/EIS") on November 2, 2023; and

WHEREAS, the RDEIR/SDEIS and Final EIR/EIS include various Project alternatives, [including two alternatives (Alternatives 1 and 3) that include Project Facilities and potentially mitigation elements involving placing lands in conservation easement within Colusa County; and

WHEREAS, on November 17, 2023, the Authority certified the Final EIR/EIS and took various related actions, including approving Alternative 3 (as defined for approval in findings adopted by Authority) as the Project for implementation; and

WHEREAS, the Parties desire to see the Project advance in a manner that will achieve its objectives, address impacts to affected County roads, adhere to various Best Management Practices ("BMPs") set forth in the Final EIR/EIS, and promote certain shared goals such as strengthening local workforce training and development, and contributing sales tax revenues to the local economy; and

WHEREAS, the Authority also seeks, through mutual agreement of the Parties, to identify and mitigate negative impacts to County not identified in the Final EIR/EIS that result from the construction and operation of the Project.

AGREEMENT:

NOW, THEREFORE, pursuant to the authority contained in the Development Agreement Act, as it applies to the County, and in consideration of the premises and mutual promises and covenants herein contained and other valuable consideration the receipt and adequacy of which the Parties hereby acknowledge, the Parties agree as follows:

1. DEFINITIONS.

For all purposes of this Agreement, except as otherwise expressly provided or unless the context requires otherwise:

"Agreement" has the meaning given in the introductory paragraph.

"Applicable Rules" means the rules, regulations, ordinances, and officially adopted policies of the County in force as of the Effective Date of this Agreement that are generally applicable to all or some properties within the County.

"Authority" has the meaning given in the introductory paragraph.

"Authority Bylaws" has the meaning given in the recitals to this Agreement.

"Benefits and Obligations Contract" has the meaning given in the recitals to this Agreement.

"BMP" has the meaning given in the recitals to this Agreement.

"CDTFA" has the meaning given in Section 3.1.5.

"CEQA" has the meaning given in the recitals to this Agreement.

"Construction Workforce Policy" means a policy to be adopted by the Authority in consultation with the County and the rest of the Authority Board members.

"County" has the meaning given in the introductory paragraph.

"County Agency" means each and every agency, department, board, commission, authority, employee, and/or official acting under the authority of the County, including without limitation, the County Board of Supervisors and the Planning Commission.

"County Board of Supervisors" means the Board of Supervisors of the County and the legislative body of the County pursuant to Section 25000 of the California Government Code.

"Covered BMPs" has the meaning given in Section 2.5.2.

"Covered Expenses" means (i) payroll costs for staff in the direct employ of the County including salaries and wages (at the hourly wage rate adopted by resolution of the Board of Supervisors), under schedules of job classifications agreed upon by the Authority and the County in advance of such performance, plus the cost of fringe benefits which shall include social security contributions, unemployment, excise and payroll taxes, workers' compensation, health and retirement benefits, bonuses, sick leave, vacation, and holiday pay applicable thereto incurred in the performance of the County's obligations under this Agreement; (ii) consultant and legal costs for services specifically related to this Agreement, including time spent in development and negotiation of this Agreement by County Counsel; (iii) general administrative costs and supplemental costs, including the proportion of necessary transportation, travel, and subsistence expenses of the County's employees incurred in discharge of duties connected with the County's obligations under this Agreement; (iv) all actual and necessary County time reasonably spent in connection with the encroachment permit, (v) all costs and expenses incurred in connection with seeking and entering into agreements regarding permits and approvals in accordance with Section 3.2.4, and (vi) other costs incurred in the performance of the County's obligations under this Agreement to the extent approved in writing by the Authority. Covered Expenses specifically exclude the Excluded Expenses.

"Development Agreement Act" means Article 2.5 of Chapter 4 of Division 1 of Title 7 (Sections 65864 through 65869.5) of the California Government Code.

"Discretionary Action" means an action that requires the exercise of judgment, deliberation or a decision on the part of the County and/or any County Agency, in the process of approving or disapproving a particular activity, as distinguished from an activity that merely requires the County and/or any County Agency, to determine whether there has been compliance with statutes, ordinances, or regulations.

"Effective Date" means the date on which this Agreement shall be effective in accordance with Section 5.1 hereof.

"ESAL" is Equivalent Single Axle Load and has the meaning given in Section 3.2.6.

"Excluded Expenses" means (i) overhead, mark-up or other general expense costs of any kind not specifically and expressly included in the definition of Covered Expenses, (ii) any costs related to the County's general involvement in the Project as a member of the Authority, a member of the Reservoir Committee, or as an investor in the Project, including payroll costs and other compensation of the County's officers, executives, general managers, estimators, attorneys, auditors, accountants, purchasing and contracting agents, expediters, timekeepers, clerks, and other personnel employed by the County whether at the site or in the County's offices for general administration of the County's work related to the Project, and (iii) expenses of the County's principal and branch offices.

"Fees" means Impact Fees, Processing Fees and any other fees or charges adopted by ordinance of the Board of Supervisors and collected by County.

"Final EIR/EIS" has the meaning given in the recitals to this Agreement.

"Impact Fees" has the meaning given in Section 3.3.11.

"Improved Local Roads and Crossing Structures" has the meaning given in Section 3.2.2.

"JPA Agreement" has the meaning given in the recitals to this Agreement.

"Land Use Approvals" means those Discretionary Actions to be taken by the County authorizing the Project. Land Use Approvals also include any subsequent Discretionary Actions that are necessary for implementation of the Project.

"Local Community Working Group" means the group organized by the Authority to provide input and feedback to the Authority to help inform Project planning and development activities. The Local Community Working Group generally consists of participating public agencies in the Project Area, labor, trade and business associations, local, state and federal elected officials and staff and other members of the communities potential affected by the Project.

"Local Area" means the Project Area plus Butte, Placer, Sacramento, Shasta, Sutter, Tehama, and Yuba counties.

"Local Roads and Crossing Structures" has the meaning given in Section 3.2.4.2.

"Local Roads and Crossing Structures for Repair" has the meaning given in Section 3.2.1.

"Maxwell Community Plan" means the planning activities being undertaken by Colusa County to evaluate and define the economic development opportunities associated with the Project and establish changes to land use designations or County codes, ordinances, or regulations that will be necessary to implement the adopted plan for the Maxwell community area.

"Ministerial Permits and Approvals" means the permits, approvals, plans, inspections, certificates, documents, licenses, and all other actions, if any, required to be taken by the County and/or County Agency in order for a Project developer to implement, develop and construct the Project in accordance with the Final Approved EIR/EIS, including without limitation, building permits, foundation permits, public works permits, grading permits, stockpile permits, encroachment permits, and other similar permits and approvals that may be required. Ministerial Permits and Approvals shall not include any Discretionary Actions.

"New Local Roads and Crossing Structures" has the meaning given in Section 3.2.3.

"NEPA" has the meaning given in the recitals to this Agreement.

"Parties" has the meaning given in the introductory paragraph.

"Party" has the meaning given in the introductory paragraph.

"Planning Commission" means the County Planning Commission and the planning agency of the County pursuant to Section 65867 of the California Government Code.

"Planning Director" means the individual designated by the Board of Supervisors as the Director of Planning or Planning Director or Director of Community Development, or Community Development Director for the applicable County.

"Processing Fees" means all processing fees and charges required by the County or any County Agency including, but not limited to, fees for land use applications, project permits, building applications, building permits, ministerial permits and approvals, grading permits, encroachment permits, tract or parcel maps, lot line adjustments, air right lots, street vacations, and certificates of occupancy that are necessary to accomplish the intent and purpose of this Agreement. Expressly exempted from Processing Fees are all Impact Fees.

"Project" has the meaning given in the recitals to this Agreement.

"Property" means the real property on which the Project will be located, and the pipeline route depicted on Annex 1 to Exhibit B (Project Specific Information).

"Project Area" means Colusa, Glenn, and Yolo counties.

"RDEIR/SDEIS" has the meaning given in the recitals to this Agreement.

"Reserved Powers" means the rights and authority excepted from this Agreement's restrictions on the County's police powers and which are instead reserved to the County. The Reserved Powers include the powers to enact regulations or take future Discretionary Actions after the Effective Date of this Agreement that may be in conflict with the Applicable Rules and Land Use Approvals, but: (1) are necessary to protect the public health and safety, and are generally applicable on a County-wide basis (except in the event of natural disasters as found by the Board of Supervisors such as floods, earthquakes and similar acts of God); (2) are amendments to Uniform Codes as defined in this Agreement regarding the construction, engineering and design standards for private and public improvements to be constructed on the Property; or (3) are necessary to comply with state or federal laws and regulations (whether enacted previous or subsequent to the Effective Date of this Agreement) as provided in Section 3.3.4.3. The Reserved Powers are limited by the authority of the Authority with respect to the siting, construction and operation of public utility above-ground storage facilities to the extent described in the Benefits and Obligations Contract, the JPA Agreement and the Authority Bylaws.

"Setting Date" means, with respect to any repair or improvement work, the date that is 60 days prior to the proposal due date for contractors to perform such work.

"Term" means the period of time for which this Agreement shall be effective in accordance with Section 5.2 hereof.

"Uniform Codes" means those building, electrical, mechanical, plumbing, fire and other similar regulations of a County-wide scope that are based on recommendations of a multi-state professional organization and become applicable throughout the County, such as, but not limited to, the Uniform Building Code, the Uniform Electrical Code, the Uniform Mechanical Code, Uniform Plumbing Code, or the Uniform Fire Code (including those amendments to the promulgated uniform codes that reflect local modification to implement the published recommendations of the multi -state organization and that are applicable County-wide).

2. PURPOSE AND INTENT; BEST MANAGEMENT PRACTICES.

2.1 County Procedures and Actions.

2.1.1 County Planning Commission Action. The County Planning Commission held a duly noticed public hearing on October 1, 2025, and recommended approval of this Agreement on October 1, 2025.

2.1.2 Board of Supervisors Action. The Board of Supervisors on _____, 20___, after conducting a duly-noticed public hearing, adopted Ordinance No. ____, to become effective on the thirty-first day after publication, approving this Agreement, and authorized the execution of this Agreement.

2.2 State Enabling Legislation. To strengthen the public planning process, encourage private participation in comprehensive planning, and reduce the economic risk of development, the Legislature of the State of California adopted the Development Agreement Act, which authorizes any County to enter into binding development agreements establishing certain development rights in real property with persons having legal or equitable interests in such property. Section 65864 of the Development Agreement Act expressly provides as follows:

> The Legislature finds and declares that:
>
> "(a) The lack of certainty in the approval of development projects can result in a waste of resources, escalate the cost of housing and other development to the consumer, and discourage investment in and a commitment to comprehensive planning, which would make maximum efficient utilization of resources at the least economic cost to the public.
>
> (b) Assurance to the applicant for a development project that upon approval of the project, the applicant may proceed with the project in accordance with existing policies, rules and regulations, and subject to conditions of approval will strengthen the public planning process, encourage private participation in comprehensive planning, and reduce the economic cost of development."

Notwithstanding the foregoing, to ensure that the County remains responsive and accountable to its residents while pursuing the benefits of development agreements contemplated by the Legislature, the County: (1) accepts restraints on its police powers contained in development agreements only to the extent and for the duration required to achieve the mutual objectives of the parties; and (2) to offset such restraints, seeks public benefits that go beyond those obtained by traditional County controls and conditions imposed on development project applications.

2.3 Purpose of this Agreement.

2.3.1 Public Benefits. This Agreement describes the relationship and mutual obligations of the Parties with regard to the Project and the Property within the County.

2.3.2 Authority Objectives. In accordance with the legislative findings set forth in the Development Agreement Act, and with full recognition of the County's policy

of judicious restraints on its police powers, the Authority wishes to obtain reasonable assurances that the Project may be developed in accordance with the Applicable Rules, Land Use Approvals, and with the terms of this Agreement and subject to the County's Reserved Powers. As provided by Section 3.1.1, the Authority anticipates making capital expenditures or causing capital expenditures to be made in reliance upon this Agreement. In the absence of this Agreement, the Authority would have no assurance that it can complete the Project for the uses and to the intensity of development set forth in this Agreement and the Land Use Approvals. This Agreement, therefore, is necessary to assure the Authority that in accordance with Government Code Section 65866, from and after the date of execution of this Agreement by all parties, the Project will not be (1) reduced or otherwise modified in intensity or use from what is set forth in the Authority's Final certified EIR/EIS, adopted Project and Project construction plans, as may be amended, and the County's Land Use Approvals of the Project, (2) subjected to new rules, regulations, ordinances, or official policies or plans that are not adopted or approved pursuant to the County's Reserved Powers.

2.3.3 Mutual Objectives. Development of the Project in accordance with this Agreement will provide for the orderly development of the Property. Moreover, a development agreement for the Project will eliminate uncertainty in planning for and securing orderly development of the Property, assure attainment of maximum efficient resource utilization within the County at the least economic cost to its citizens, and otherwise achieve the goals and purposes for which the Development Agreement Act was enacted. The Parties believe that such orderly development of the Project will provide public benefits, as described in Section 2.6, to the County under the provisions and conditions of this Agreement. Additionally, although development of the Project in accordance with this Agreement will restrain the County's land use or other relevant police powers, this Agreement provides the County with sufficient reserved powers during the term hereof to remain responsible and accountable to its residents. In exchange for these and other benefits to the County, the Authority will receive assurance that the Project may be developed during the term of this Agreement in accordance with the Applicable Rules, Land Use Approvals, and Reserved Powers, subject to the terms and conditions of this Agreement; that the County will expeditiously process the Land Use Approvals, any Discretionary Actions, any Ministerial Permits and Approvals, and any other approvals or actions required for the Project; and that if requested by the Authority, the County will affirmatively cooperate in supporting the Project, including written notification to State and Federal Agencies that the Project is locally supported by the community.

2.4 Applicability of the Agreement. This Agreement does not: (1) grant density or intensity in excess of that otherwise established in the Land Use Approvals; (2) eliminate future Discretionary Actions relating to the Project if applications requiring such Discretionary Action are initiated and submitted by the Authority or its successors after the Effective Date of this Agreement; (3) guarantee that the Authority will receive any profits from the Project; or (4) in and of itself, amend the County's [General Plan]. This Agreement has a fixed Term.

2.5 Best Management Practices.

2.5.1 Commitment. To address County's concerns with matters of Project implementation that are addressed in the BMPs adopted by the Authority, the Authority

commits to fully and faithfully implement the Covered BMPs (as defined below) in connection with work occurring within the County. This commitment is limited in certain respects, as expressly set forth herein.

2.5.2 Applicable BMPs. The Parties agree that the BMPs with significant potential to apply to work occurring within Colusa County ("Covered BMPs") are: BMP 10 (Salvage, Stockpiling, and Replacement of Topsoil and Preparation of a Topsoil Storage and Handling Plan); BMP 15 (Performance of Site-Specific Drainage Evaluations, Design, and Implementation); BMP 16 (Development and Implementation of a Construction Equipment, Truck, and Traffic Management Plan); BMP 22 (Development and Implementation of a Construction Noise Abatement Plan); and BMP 28 (Preparation and Implementation of Fugitive Dust Control Plans); all as may be revised from time to time in accordance with Section 2.5.3 of this Agreement.

Certain other BMPs are expected to be implemented, as appropriate, by terms and conditions included in ministerial County permits issued to the Authority or its contractor(s) and are not specifically designated as "Covered BMPs". Such BMPs include: BMP 1 (Conformance with Applicable Design Standards and Building Codes); BMP 3 (Completion of Preconstruction Geotechnical Evaluations and Data Reports); and BMP 6 (Decommissioning of Water Wells).

2.5.3 Limitations.

2.5.3.1 Changes to BMPs. The Parties recognize that the Authority retains its legal authority to consider and approve changes to all BMPs, including the Covered BMPs, before and during Project implementation. In connection with contemplated material changes to the Covered BMPs, the Authority will do at least the following:

(i) Provide at least 30 days prior written notice to the County of its intent to amend, rescind, or otherwise modify the BMP. Such notice shall describe the change(s) under consideration and the reasons for considering the change(s);

(ii) Consider in good faith any written comments submitted by the County within the 30-day period;

(iii) If requested by the County within the 30-day period, convene an in-person meeting attended by Authority's Executive Director, Authority's Board Chair, or both, to discuss in good faith County questions, concerns, or other matters of interest with respect to the change(s) under consideration prior to taking action thereon; and

(iv) Ensure that the County's concerns are presented to the Board of Directors prior to any action on the proposed change(s).

2.5.3.2 Landowner Concerns. If a private landowner requests that the Authority refrain from implementing a Covered BMP (in whole or part) on its property, the Authority will notify the County. If the County so requests within a reasonable timeframe (at least seven calendar days after notice unless circumstances require a shorter period), the Authority will confer with the County regarding any concerns or objections. The Parties agree that if a private landowner refuses to provide the Authority with permission or other rights

necessary to implement a Covered BMP (in whole or part) and, after the County and Authority have conferred on the issue or the County has declined to confer on the issue, the Authority cannot implement the Covered BMP as a result, no breach of this Agreement shall occur.

2.5.3.3 Material Change to the Covered BMPs. The County and the Authority will meet and confer prior to the start of construction of the Sites Reservoir to mutually agree, in writing, on what constitutes a material change to the Covered BMPs.

2.5.3.4 Authority. This Agreement does not limit or otherwise modify the Authority's sole authority to revise or rescind all BMPs, including the Covered BMPs. Similarly, this Agreement does not limit or in any way affect the legal remedies available to the County if the Authority revises or rescinds a BMP in a manner that County may contend fails to meet applicable legal requirements, including but not limited to CEQA.

2.6 Community Benefits. On an ongoing basis from the execution of this Agreement through Project construction, the Parties agree to cooperate in good faith to identify potential community benefit measures, programs or projects that could be implemented during Project construction or operation. It is understood that the Authority has formed a Local Community Working Group that represents community members across all areas affected by the Project. It is through this venue that potential community benefit measures, programs, and projects proposed by any parties are to be considered and evaluated. Also, it is understood that the Project is being developed according to the beneficiary pays principle, meaning the party that derives benefit from the Project will pay for such benefit. Further, the Authority agrees to support and implement community benefit actions and create policies and programs that support local workforce training and development consistent with the Construction Workforce Policy and the [Maxwell Community Plan].

The Authority agrees to cooperate and identify and implement programs and projects in the Local Area, including those within the jurisdiction of the County Board of Supervisors and within the jurisdiction of cities, schools, and special districts within the County, including within the affected communities within the unincorporated areas of the County, that satisfy the Authority's obligations with respect to air quality under mitigation measures EJ-1 (as stipulated under the Authority's MOU for construction with Certain Local Area County Air Pollution Control Districts) and EJ-2, and GHG-1.1 described in the CEQA approval. The Authority will work with the Local Area to implement these measures in a manner and in locations that coordinates the Local Area needs' with those of the Project, to the extent feasible.

2.6.1 The Parties recognize and agree a future amendment to this Agreement may be an appropriate means of ensuring the provision of community benefits in connection with the Project. Nothing in this Agreement requires either Party to enter into a development agreement or otherwise limits the Parties' respective authority regarding such matters.

3. AGREEMENT AND ASSURANCES.

3.1 Agreement and Assurance on the Part of the Authority. In consideration for the Authority entering into this Agreement, and as an inducement for the Authority to obligate itself

to carry out the covenants and conditions in this Agreement and effectuate the promises, purposes, and intentions in this Agreement, the County hereby agrees as follows:

3.1.1 Project Development. Subject to compliance with all applicable laws, Land Use Approvals, other governmental approvals, the terms of the Benefits and Obligations Contract and the terms and conditions of this Agreement, the Authority agrees to use commercially reasonable efforts to construct and complete the Project in substantial conformance with the approved design documents.

3.1.2 Agreement for Design, Construction, Operation and Maintenance and Ownership Transfer. The Authority and the County shall negotiate in good faith and endeavor to enter into an agreement for the design, construction and operation and maintenance for any New County Roads and Crossing Structure as described in Exhibit C (Local Roads and Crossing Structures), including, for the avoidance of doubt, the Sites-Ladoga Bridge which is to be constructed as part of the Project and transferred to the County upon completion of the bridge. All agreements between the Parties for such improvements shall be in writing. In addition, this Agreement will address the disposition of existing County property rights for the County roads that are being relocated with the new roads as applicable.

3.1.3 Intentionally Deleted.

3.1.4 Wind-Up Following Termination Prior to Completion. To the extent described in the Benefits and Obligations Contract, in the event that the Benefits and Obligations Contracted is terminated prior to completion of the Project, the Authority shall wind-up the Project in the manner described in Section 11.1 (Termination Prior to Completion of the Project) of the Benefits and Obligations Contract, including by appointing a winding-up agent who will prepare a plan for mitigating or remediating any hazardous or unsafe conditions located on the Project site that are a direct result of the construction of the Project.

3.1.5 Tax Forms. The Authority shall complete and submit appropriate State forms for sales tax revenue required by California Department of Tax and Fee Administration ("CDTFA").

3.1.6 Impact Alleviation Agreements. The Authority shall use its best efforts to enter into impact alleviation agreements ("Impact Alleviation Agreements") with the following parties:

1. Maxwell Unified School District ("School District") regarding concerns expressed by the School District in the areas of 1) removal of houses and parcels from the School District boundaries, 2) possible long term impacts on School District facilities due to changes in school enrollment, 3) additional mitigation needs, 4) economic challenges due to prevailing wage jobs, and 5) any other concerns or issues raised by the School District;
2. Maxwell Fire District regarding concerns expressed by the Maxwell Fire District in relation to increased emergency response demands due to construction related incidents, temporary workforce, recreation activities and population growth;

3. Maxwell Public Utilities District regarding concerns expressed by the Maxwell Public Utilities District in relation to increased strain on water and sewer systems from population increase; and
4. Colusa County Sheriff regarding concerns expressed by the Colusa County Sheriff in relation to service demand increases related to construction and workforce road use, temporary workforce domestic issues, and recreation operations.
5. Maxwell Parks and Recreation District regarding concerns expressed by the Maxwell Parks and Recreation District in relation to possible effects on facilities within their jurisdiction.
6. Colusa County Public Works Department regarding concerns expressed by the Colusa County Public Works Department in relation to facilities within their jurisdiction, not otherwise covered in this agreement.

3.1.7 Local Hiring. The Authority endeavors to establish a local annual hiring goal (covering the Project Area and the Local Area) for the project construction workforce and such goal shall be memorialized in an Authority adopted Construction Workforce Policy, or similar. Upon request by the County, the Authority shall report its actual hiring figures to the County on an annual basis.

3.2 Impacts to County Roads and Crossing Structures and New Roads.

3.2.1 Road and Crossing Structure Repairs. At its sole cost and expense, the Authority will restore to as good or better condition all County roads and crossing structures impacted by Project construction, including but not limited to roads and crossing structures applicable to the County that are shown to be repaired in the table "County Roads and Crossing Structures Work Related to Sites Reservoir Project" ("Local Roads and Crossing Structures for Repair") in Exhibit C (Local Roads and Crossing Structures). Such work may include repairs, reconstruction, and/or any other work necessary to meet the "as good or better condition" standard as described in Section 3.2.5 and Exhibit B (Project Specific Information) of this Agreement. Work pursuant to this Section is designed to address the impacts to Local Roads and Crossing Structures for Repair that are attributable to Project construction traffic and the Authority will not be required to address impacts to Local Roads and Crossing Structures for Repair that are attributable to traffic or other factors that are not related to the Project.

3.2.2 Road and Crossing Structure Improvements. At its sole cost and expense, the Authority will improve local roads and crossing structures to County standards described herein, roads and crossing structures applicable to the County that are shown to be improved in the table "County Roads and Crossing Structures Work Related to Sites Reservoir Project ("Improved Local Roads and Crossing Structures") in Exhibit C (Local Roads and Crossing Structures). Such work may include improvements and repairs, reconstruction, and/or any other work necessary to meet the "as good or better condition" standard for the Improved Local Roads and Crossing Structures upon completion of Project use. Work pursuant to this Section is designed to address the impacts to Improved Local Roadways and Crossing Structures that are attributable to Project construction traffic and the Authority will

not be required to address impacts to Improved Local Roads and Crossing Structures that are attributable to traffic or other factors that are not related to the Project.

3.2.3 New Roads and Crossing Structures. At its sole cost and expense, the Authority will build new roads needed for Project construction, including but not limited to new roads and crossing structures applicable to the County that are shown to be new in the attached table "County Roads Work Related to Sites Reservoir Project ("New Local Roads and Crossing Structures"). The Authority and the County will enter into a separate agreement specifying design and construction requirements, review and inspection rights and obligations and ownership transfer conditions for New Local Roads and Crossing Structures to become applicable County responsibility. Exhibit D is provided as minimum requirements of such agreement.

3.2.4 Permits, Cooperation and Implementation.

3.2.4.1 Without waiving any exemptions under the Government Code for facilities that are indispensable to the production, generation, storage, treatment, or transmission of water and exempt from local building and zoning ordinances, the Authority will apply for, obtain, and maintain, or cause to be applied for, obtained and maintained, all permits and approvals required for the Project listed in Exhibit A (Permit Requirement Matrix). The County shall cooperate with the Authority in its endeavors to obtain such permits and approvals and shall, at the request of the Authority, attempt with due diligence and in good faith to enter into binding agreements with any permitting entity having jurisdiction over any aspect of the Project to ensure the availability and approvals of such permits and all other approvals, if any. To the extent allowed by law, the Authority shall be a party to any such agreement, or a third party beneficiary thereof, entitled to enforce for its own benefit and on behalf of the County, or in its own name, the rights of the County or the Authority thereunder or the duties and obligations of the parties thereunder. The Authority shall reimburse the County for Covered Expenses incurred in connection with seeking and entering into any such agreement(s), provided that the Authority has requested such agreement(s).

3.2.4.2 Without limiting the general obligations in Section 3.2.4.1, the Authority will obtain an encroachment permit from the County prior to construction-related traffic on County roads. Each such permit will include provisions addressing County review of plans and specifications for Authority's use of Local Roads and Crossing Structures for Repair, Improved Local Roads and Crossing Structures and New Local Roads and Crossing Structures (together "Local Roads and Crossing Structures"); review and approval of placement of signage, traffic control, and construction schedule, which approval shall not be unreasonably withheld; and inspections of all work occurring within a County right of way. All Covered Expenses shall be reimbursed by Authority. The Authority shall, in a timely manner, provide the County with all documents, plans, fees, and other information necessary for the County to carry out its processing obligations pursuant to this Agreement.

3.2.4.3 Upon satisfactory completion by the Authority of all required preliminary actions and payment of appropriate Processing Fees, including any fee for processing this Agreement, the County shall:

1. commence and diligently and expeditiously process all required steps necessary for the implementation of this Agreement and any general plan update or zoning amendments necessary for development of the Project in accordance with the terms, provisions and conditions of this Agreement; and
2. to the extent County is reasonably able, cooperate with the Authority and provide or cause to be provided such limited information, documentation and administrative assistance as the Authority may reasonably request in connection with the Project to obtain the required permits and approvals for construction, operation and maintenance of the Project. Neither County nor any County Agency is obligated to (i) exercise its legal rights in order to avoid or eliminate the requirement to obtain any required permits or approvals, or (ii) grant permits and approvals for which it is the authorizing entity. County will apply its usual and customary procedures and criteria in considering applications from the Authority for such permits and approvals; and
3. Provided the Authority reasonably complies with all Countywide standard procedures for processing applications for the Land Use Approvals or other Discretionary Actions, the County shall expedite the processing of Land Use Approvals and Discretionary Actions to the maximum extent possible.

3.2.4.4 Cooperation. In the event of any opposition to the Project by a third party, including, but not limited to, governmental entity(ies) or official(s), the County hereby agrees, if requested by the Authority, to affirmatively cooperate in supporting the Project. Such cooperation does not include initiating any legal or administrative proceeding, intervening in such, or becoming a party to such proceedings.

3.2.4.5 Cooperation In the Event of Legal Challenge. In the event of any legal action instituted by a third party private or governmental entity or official challenging the validity of any term, provision or condition of this Agreement, the Parties hereby agree to affirmatively cooperate in defending against such challenge, but such cooperation shall not include bringing an action in the name of the County or sharing the expense of defense of any such legal action by the County.

3.2.4.6 Defense and Indemnification. The Authority agrees as a condition of receiving any land use approvals, entitlements, discretionary or ministerial permits (approvals) from the County related to the Project to indemnify and defend the County, at the Authority's sole cost and expense, from any claim, action, or proceeding brought against the County because of, or resulting from, the issuance of such approvals. The Authority will reimburse the County for any damages, court costs, and attorney fees which the County may be required by the court to pay as a result of such claim, action, or proceeding. The County shall promptly notify the Authority of any such claim, action, or proceeding and will cooperate in its defense. The County may also, at its sole discretion, participate directly in the defense of any such claim, action, or proceeding but such participation shall not relieve the Authority of its obligations under this condition.

3.2.5 Design and Improvement Standards. Standards for the performance of all road design covering repair and improvement on Local Roads and Crossing Structures shall meet or exceed the improvement standards listed in Exhibit B (Project Specific

Information) in effect as of the applicable Setting Date, unless the Parties later agree otherwise (including, but not limited to, in a development agreement that provides for application of then-existing improvement standards).

The County acknowledges the Authority's desire to have consistent road repair, improvement and new work standards across all affected jurisdictions (including Colusa and Glenn counties) and will collaborate with Authority to resolve any disputes concerning applicable standards.

3.2.6 Condition Assessment. Within 30 days prior to the commencement of Project construction work that is expected to impact Local Roads and Crossing Structures, the Authority will perform a preconstruction road condition survey of the Local Roads and Crossing Structures (including any County roads not specifically listed herein) anticipated to be affected by Project-related construction traffic and the County will calculate an estimated loss of road life by way of an Equivalent Single Axle Load ("ESAL") analysis. The preconstruction survey shall include video, photographs and other evidence sufficient to document the then-current condition of the affected Local Road and Crossing Structure segments. If construction is phased, the Authority will conduct or procure a further survey at the completion of each phase and at any additional times as may be required upon request, in County's reasonable discretion, to document the deterioration of road conditions during Project construction in anticipation of repairs pursuant to this Agreement. Consideration shall be given to other non-Project related factors that may cause roadway degradation in determining the Authority's responsibility for Local Road and Crossing Structure repairs. The Authority agrees to pay all costs reasonably incurred by the County in reviewing such surveys as set out in Section 3.2.8.

The Parties may elect for the County, rather than the Authority or its contractor, to perform the surveys required by this Section, subject to the Authority's reimbursement of Covered Expenses reasonably incurred.

3.2.7 Corrective Action. Unless the County and the Authority otherwise agree, the Authority shall prepare a corrective action plan for all project construction-related road damage pursuant to the "Condition Assessment" provision, above. Upon County approval thereof, which approval shall not be unreasonably withheld, unless the County and the Authority agree to defer implementation until Project completion, the Authority shall implement the plan at its sole cost and expense in a time and manner to be agreed upon with the County.

The Authority shall notify the County in writing (e-mail notice to the Public Works Director or designee is sufficient) at least 24 hours, or such longer period specified in the applicable permit, prior to commencing any corrective work. The Authority shall use commercially reasonable efforts to implement the plan as approved by the County, provided that the Authority shall be permitted to adjust the corrective action plan if strict adherence to the plan would result in unreasonable costs or schedule issues, and such adjustments shall not be considered a breach of this Agreement. In the event that the Authority determines an adjustment to an approved corrective action plan is required, the Authority shall notify the County in writing of such adjustment as soon as reasonably practicable.

Alternatively, if the Parties agree, rather than performing some or all of the corrective work itself, the Authority may provide reimbursement to the County for the County's Covered Expenses in exchange for the County's assumption of the obligation to perform such work.

The Parties acknowledge that the Project is expected to be constructed over 7 to 8 years' total time from start to end of construction and in some, but not all, instances work in specific locations may be intermittent with significant time passing between start of work and end of work. The actual use and damage of roads for the Project will vary and there may be times when Project damage is incurred of sufficient magnitude requiring interim maintenance to resume suitable road conditions for routine non-project related traffic. The Project team shall closely coordinate with the County during the entire project duration to ensure the County's needs for suitable, well-maintained roads to be in service is achieved at all times over the course of the entire Project. The Authority and the County agree that the Parties may find it mutually beneficial to pool resources in the delivery of intermittent repair of roads that are damaged because of Project activity.

3.2.8 Reimbursement Procedure. Prior to incurring Covered Expenses pursuant to this Agreement, the Authority and the County shall agree on reasonable methods for recording Covered Expenses (including, for example, staff and management timekeeping policies and procedures).

3.2.9 The County shall ensure that staff labor costs and task descriptions are recorded in reasonable detail and records kept in accordance with its records retention policies, or for any longer period required by law (including the Authority's Records Management Policy), or outside funding sources.

3.2.10 The County shall submit to the Authority an invoice on account of all amounts then payable by the Authority to the County on a monthly basis, no later than the tenth day following the last day of the month being invoiced, unless some other period is agreed to by the Parties in writing, until the expiration or earlier termination of this Agreement.

3.2.11 Each invoice shall include any supporting documentation reasonably necessary to enable the Authority to fully and accurately determine (without needing to refer to any other documentation or information) the amounts payable by the Authority to the County under this Agreement, including any such documentation or information, which the Authority may by written notice from time to time require the County to set out or attach, whether in relation to a specific invoice or all invoices generally.

3.2.12 Within 30 days after the Authority's receipt of a complete invoice that satisfies all the requirements set forth above, the Authority shall approve and pay such invoice or dispute all or a portion of such invoice. The Authority shall provide the County the reason(s) for any disputed portions of such invoice and withhold the disputed amount, while remitting timely payment for the undisputed portions of the subject invoice. The terms and conditions of Section 5.5 shall apply to any such dispute.

3.3 Agreement and Assurances on the part of the County. In consideration for the Authority entering into this Agreement, and as an inducement for the Authority to obligate itself

to carry out the covenants and conditions in this Agreement and effectuate the promises, purposes, and intentions in this Agreement, the County agrees as follows:

3.3.1 Entitlement to Develop. Authority has the vested right to develop the Project subject to the terms and conditions of this Agreement, the Applicable Rules, Land Use Approvals, the Final EIR/EIS and the Reserved Powers. The Authority's vested rights under this Agreement shall include, without limitation, the right to construct, operate and maintain the Project, and mitigate environmental effects subject to the Applicable Rules, Land Use Approvals, the Final EIR/EIS, the Reserved Powers and the Benefits and Obligations Contract.

3.3.2 Consistency in Applicable Rules. Based upon all information made available to the County up to or concurrently with the execution of this Agreement, and subject to approval of the Land Use Approvals, the County finds and certifies that no Applicable Rules prohibit or prevent the full completion and operation of the Project as described in the Final EIR/EIS.

3.3.3 No Warranty of Completion. By entering into this Agreement, the Authority does not warrant that it will construct and achieve completion of the Project, and failure to do so shall not be considered a default under this Agreement.

3.3.4 Changes in Applicable Rules.

3.3.4.1 Nonapplication of Changes in Applicable Rules. Any change in, or addition to, the Applicable Rules, including, without limitation, any change in any applicable general or specific plan, zoning or building regulation, adopted or becoming effective after the execution of this Agreement by all Parties, including, without limitation, any such change by means of ordinance, County charter amendment, initiative, referendum, resolution, motion, policy, order, or moratorium, initiated or instituted for any reason whatsoever and adopted by the County, the Board of Supervisors, the Planning Commission, or any other Board, Commission, Department, or Agency of the County, or any officer or employee thereof, or by the electorate, as the case may be, which would, absent this Agreement, otherwise be applicable to the Project and which would conflict in any way with the Applicable Rules, Land Use Approvals, or the Final EIR/EIS shall not be applied to the Project unless such changes represent an exercise of the County's Reserved Powers or are otherwise agreed to in this Agreement. Notwithstanding the foregoing, Authority may, in its sole discretion, consent in writing to the application to the Project of any change in the Applicable Rules.

3.3.4.2 Changes in Uniform Codes. Notwithstanding any provision of this Agreement to the contrary including Section 3.2.5, development of the Project shall be subject to changes that may occur from time to time in the Uniform Codes. The design and construction requirements for an individual action or construction contract under the Project shall be governed by the Uniform Code then in effect at the Setting Date.

3.3.4.3 Changes Mandated by Federal or State Law. This Agreement shall not preclude the application to the Project of changes in, or additions to, the Applicable Rules,

including rules, regulations, ordinances, and official policies, to the extent that such changes or additions are mandated to be applied to developments such as this Project by state or federal laws or regulations, pursuant to the Reserved Powers. In the event state or federal laws or regulations prevent or preclude compliance with one or more provisions of this Agreement, such provisions shall be modified or suspended as may be necessary to comply with such state or federal laws or regulations.

3.3.5 Subsequent Development Review. The County shall not require the Authority to obtain any approvals or permits for the development of the Project in accordance with this Agreement other than those permits or approvals that are required by the Applicable Rules, the Reserved Powers, the Land Use Approvals and/or Exhibit A (Permit Requirement Matrix), and subject to the siting and operational authority of the California Public Utilities Commission.

3.3.6 Intentionally Deleted.

3.3.7 Effective Development Standards. The County agrees that it is bound to the uses, intensities of use, and densities on this Property that are permitted by this Agreement and the Land Use Approvals, insofar as this Agreement and the Land Use Approvals so provide or as otherwise set forth in the Applicable Rules or the Reserved Powers. The County hereby agrees that it will not unreasonably withhold or unreasonably condition any Land Use Approval or other Discretionary Action that must be issued by the County in order for construction, operations and maintenance of the Project to proceed, provided that the Authority reasonably and satisfactorily complies with all countywide standard procedures for processing applications for the Land Use Approval or other Discretionary Action.

3.3.8 Use of Property. The County agrees that the Authority may use the Property for construction of the Project, and for a setup and staging area.

3.3.9 Moratoria or Interim Control Ordinances. In the event any ordinance, resolution or policy is enacted by action of the County that relates directly or indirectly to the Project or to the rate, amount, timing, sequencing, or phasing of the development or construction of the Project on all or any part of the Property, County agrees that such ordinance, resolution, or policy shall not apply to the Property or this Agreement, unless such changes are adopted pursuant to the Reserved Powers or other applicable provisions of this Agreement and are not otherwise superseded by the siting and operational authority of the Final approved EIR/EIS unless agreed to in writing by the Authority.

3.3.10 Infrastructure Financing. If Authority undertakes infrastructure financing, such as Mello-Roos community facilities districts, the County will cooperate fully in such undertaking and will process any related applications as expeditiously as possible.

3.3.11 Impact Fees. Impact Fees imposed by the County with respect to the Project shall be tied to a specific service or service capacity within the County, in existence as of the approval of this Agreement by the Board of Supervisors, that is directly impacted by the Project and not already covered in this Agreement. Impact Fees shall be calculated at the

time of the County's issuance of the relevant permit and assessed based on values existing at that time. Impact Fees imposed by the County on the Project may not be increased in amount. This Agreement shall not limit any impact fees, linkage fees, exactions, assessments, fair share charges, or other similar fees or charges imposed by governmental entities not a party to this Agreement and which the County is required to collect or assess pursuant to applicable law (*e.g.*, school district impact fees pursuant to Government Code Section 65995).

3.3.12 Processing Fees. The Authority shall pay all Processing Fees. Processing Fees shall be limited to Processing Fees in effect on the Effective Date. The Authority shall pay such Processing Fees, on a pass through basis, without markup, within 30 days of Authority receiving a properly submitted and complete invoice from the County and otherwise set out in Section 3.2.8.

3.3.13 Timeframes and Staffing for Processing and Review; Consultants. The County agrees that expeditious processing of the Land Use Approvals, any Discretionary Actions, any Ministerial Permits and Approvals, and any other approvals or actions which may be required for the Project are critical to the implementation of the Project. In recognition of the importance of timely processing and review of the Land Use Approvals, any Discretionary Actions, and any Ministerial Permits and Approvals, the County agrees to work and cooperate with the Authority to establish time frames for processing and reviewing requests for such approvals and to comply with timeframes established to the greatest extent possible. Furthermore, the County shall expedite all requests by the Authority for any such approvals requested for the Project to the greatest extent possible. To facilitate the expeditious review of subsequent approvals, the County may engage a qualified third party consultant or consultants (e.g., civil engineers, electrical engineers, building plans permit examiner, plan check inspector, surveyors, land use/development review professionals, or similar professionals) (each, a "Consultant"), to assist the County in its review of subsequent approvals, provided, that the County shall retain its independent authority to issue any such subsequent approval. Consultants may provide the County with technical assistance required to review subsequent approvals, or assistance required to expedite the processing of subsequent approvals. The County will notify the Authority before engaging any Consultant for which it will seek reimbursement from Authority and provide the Authority with the Consultant's proposed scope of work and cost estimate, which will be subject to the Authority's review and approval, along with a proposed form of reimbursement agreement consistent with the terms of this Section 3.3.13. The Authority acknowledges and agrees that declining the use of a Consultant will mean that the subject subsequent approval will not be subject to expedited review and processing; provided, however, that such subsequent approval will remain subject to applicable law concerning permit review and approval and the County's normal permit review and approval process and timelines.

3.3.14 Payment in Lieu of Taxes. The Authority agrees that it shall pay to the County annual payments in lieu of taxes ("PILT") for properties under the Authority's ownership within the County shown in Exhibit B, plus any Authority owned lands purchased for the purpose of mitigating environmental effects, in an amount calculated and verified by the County's Auditor-Controller not to exceed the amount of property taxes without applying the Williamson Act that County would have received based on assessment to the Project property prior to the sale of the Project property to the Authority had the Project been subject

to County taxes based on the overall assessed value increase determined in accordance with applicable law (including transfer tax and recording fees arising from or associated with such properties). For purposes of illustration, the County has calculated the estimated PILT amounts payable to the County with respect to the properties under the Authority's ownership within the County, as set forth in Exhibit B (Project Specific Information). Upon acquiring fee title for each property within the County, the Authority agrees to pay directly to County the PILT amounts for each property within 30 days of the Authority receiving a properly submitted and complete invoice for the foregone property tax from the County Auditor-Controller and otherwise in accordance with Section 3.2.8. Charges for County services included in the PILT amounts shall only include services paid from general ad valorem property taxes and shall not include fees and services billed separately to the Authority. An example of the calculation to be made for PILT is set forth in Exhibit B.

The County agrees to allocate the PILT amounts paid by the Authority annually among the entities and purposes in amounts and proportions that would otherwise be received by these entities and purposes.

3.3.15 Ownership of Project; Prioritization of Local Agencies. The Benefits and Obligations Contract describes the ownership of Capacity Interest in the Project and the method for transferring such Capacity Interest, including the potential sale, transfer or assignment of Capacity Interest by the Authority for the account of the owner of such Capacity Interest following a default by such owner, and to the extent that the Authority has not previously authorized a prioritization in acquiring such Capacity Interest, including through any right of first offer described in the Benefits and Obligations Contract County Agencies which are currently on a wait list to acquire Capacity Interest shall have a right of first offer to assume all or a portion of the Capacity Interest being disposed by the Authority.

3.3.16 Sales Tax / Office. To the full extent allowed by law, the Authority will require the construction contractors to participate in the jobsite sub-permit reporting through the CDTFA to maximize local taxes collected on behalf of the counties for work on the Project occurring within each county. To the full extent allowed by law, the Authority will require that all construction contractors providing services, labor and materials for the Project under contracts in excess of $1M, (a) obtain all necessary sales/use tax jobsite sub-permit(s) from CDTFA; (b) comply with all associated reporting requirements; and (c) otherwise designate a location within the Project Area as the place of use of materials and/or sale of fixtures used in the construction of the Project.

3.3.17 Memorandum of Understanding. The Parties acknowledge that the Parties have entered into that certain Memorandum of Understanding, on or about November 22, 2021, pursuant to which the Authority and the County have reached agreement on terms and conditions regarding the County's area of origin water rights claims to Funks Creek and Stone Corral Creek within the County and related matters.

3.3.18 Impact Alleviation on County Administrative Services. In consideration of the administrative functions within the County that may be materially affected by the implementation of the terms of this Agreement, the Authority is committing to provide funding as follows:

a. For a duration of seven years starting with the initiation of the first construction contract by the Authority entered into after the start of Phase 3, the Authority shall make an annual lump sum payment recognized as a contribution to the County's efforts related to this agreement in the areas of grants assistance, and for County Financial Analyst services. County agrees to demonstrate that such funds shall be used solely for these purposes and with at least 80% of funds each year being applied to grants assistance. Should the County fail to demonstrate these conditions are met, the Authority reserves the right to withhold future payments until County is able to meet the conditions. The parties agree that the primary use of the grants assistance sums will be for Project and Maxwell Community Plan Implementation related activities and any of grants assistance sums towards County-wide activities are secondary. The Authority shall make payments in these amount over each of the seven years:

First three years – $120k/yr

Year Four - $96k

Year Five - $72k

Year Six - $48k

Year Seven - $24k

3.3.19 USDA Rural Small Community Program Loan (up to $450 million). It is acknowledged that the County assisted in securing this crucial financing mechanism serving to provide a means for County agricultural interests to affordably participate in the Sites Project. In consideration of this effort, the Authority is willing to further explore the assignment of the loan terms and conditions and directly and specifically to Colusa County interests that i) are participating in the Project and ii) affirmatively express their desire to be recipients of such assignment. The Authority and the participating Colusa County interests will determine mutually agreed upon terms for the assignment of the loan, if pursued and allowed by USDA, provided that upon such assignment, the Authority shall no longer have any rights or obligations under such loan.

3.3.20 Maxwell Gateway Park Design. The Authority agrees to procure at its own cost and as a service to the County and/or Maxwell Park and Recreation District, the 100% design of up to a 3 acres gateway entry park conceptually described in the Adopted Maxwell Community Plan. Such design shall occur concurrent with the design of the reservoir recreation facilities and shall be consistent in character and feel to the reservoir recreation elements to create a connectedness between the facilities and encourage those that use the park to also extend their local visit to include the reservoir facilities.

4. DEFAULT PROVISIONS.

4.1 Default By the Authority.

4.1.1 Default. In the event the Authority does not perform its obligations under this Agreement in a timely manner, the County shall have all rights and remedies provided by this Agreement, which shall include compelling the specific performance of the obligations of the Authority under this Agreement, or modification or termination of this Agreement, provided that the County has first complied with the procedure in Section 4.1.2 hereof.

4.1.2 Notice of Default. The County shall first submit to the Authority a written notice of default stating with specificity those obligations specified in this agreement that have not been performed. Upon receipt of the notice of default, the Authority shall promptly commence to cure the identified default(s) at the earliest reasonable time after receipt of the notice of default and shall complete the cure of such default(s) not later than 120 days after receipt of the notice of default, or such longer period as is reasonably necessary to remedy such default (s), provided that the Authority shall continuously and diligently pursue such remedy at all times until such default(s) is cured.

4.1.3 Failure to Cure Default Procedure. If after the cure period has elapsed, the Director of Planning finds and determines that the Authority, or its successors, transferees, and/or assignees, as the case may be, remains in default and that the County intends to terminate or modify this Agreement, or those transferred or assigned rights and obligations, as the case may be, the Director of Planning shall make a report to the Board of Supervisors and then set a public hearing before the Supervisors in accordance with the notice and hearing requirements of Government Code Sections 65567 and 65868.

4.1.4 Action by Board of Supervisors. The Board of Supervisors shall act upon the report of the Planning Director within 45 days after the Planning Director has made a report to the Board of Supervisors, or within such additional period as may be agreed upon by the Authority and the Board of Supervisors. The failure of the Board of Supervisors to act within 45 days shall be deemed to be a determination that the Authority is not in default of this Agreement.

4.1.5 Dispute Resolution. In the case of a dispute as to whether the Authority has cured the default, the Parties shall submit the matter to dispute resolution pursuant to Section 5.5 of this Agreement. The County shall commence dispute resolution within 30 days of the Board of Supervisors making a final determination that the Authority is in default.

4.1.6 Termination or Modification of Agreement. The County may terminate or modify this Agreement, or those transferred or assigned rights and obligations, as the case may be, after a final determination pursuant to Section 5.5 of this Agreement that the Authority is in default. There shall be no modifications of this Agreement unless the Board of Supervisors acts pursuant to Government Code Sections 65867.5 and 65865.

4.2 Default By The County.

4.2.1 Default. In the event the County does not accept applications for, process, or render a decision on necessary development permits, entitlements, or other land use or building approvals for the Project, including the Land Use Approvals, Discretionary Actions and Ministerial Permits and Approvals, as provided in this Agreement and upon compliance with the requirements thereof, or as otherwise agreed to by the Parties, or the County otherwise defaults under the provisions of this Agreement, the Authority shall have all rights and remedies provided herein or by applicable law, which shall include compelling the specific performance of the County's obligations under this Agreement.

4.2.2 Notice of Default. The Authority shall first submit to the County a written notice of default stating with specificity those obligations that have not been performed. Upon receipt of the notice of default, the County shall promptly commence to cure the identified default(s) at the earliest reasonable time after receipt of the notice of default and shall complete the cure of such default(s) not later than 120 days after receipt of the notice of default, or such longer period as is reasonably necessary to remedy such default(s), provided that the County shall continuously and diligently pursue such remedy at all times until such default(s) is cured. In the case of a dispute as to whether the County has cured the default, the Parties shall submit the matter to dispute resolution pursuant to Section 5.5 of this Agreement.

4.2.3 Termination or Modification of Agreement. The Authority may terminate or modify this Agreement after a final determination pursuant to Section 5.5 of this Agreement that the County has failed to cure its default.

4.3 No Monetary Damages. It is acknowledged by the Parties that neither the County nor the Authority would have entered into this Agreement if it were liable in monetary damages under or with respect to this Agreement or the application thereof. Therefore, the Parties agree that the Parties shall not be liable in monetary damages, and the Parties covenant not to sue for or claim any monetary damages for the breach of any provision of this Agreement.

5. GENERAL PROVISIONS.

5.1 Effective Date. This Agreement shall be effective upon the thirty-first day after the Board of Supervisors, after conducting a duly-noticed public hearing, adopts an ordinance approving and authorizing this Agreement, or as otherwise provided by California law.

5.2 Term.

The Term of this Agreement shall commence on the Effective Date and shall extend to the earlier of (i) 20 years or (ii) the earlier termination in accordance with the terms of this Agreement, except with respect to (1) the Authority's obligation to make the PILT in accordance with Section 3.3.14 of this Agreement, which obligation of the Authority shall continue until the Authority has made the last such PILT as described in Exhibit B (Project Specific Information), unless said Term is otherwise terminated, modified, or extended in writing by circumstances set forth in this Agreement or by mutual consent of the Parties hereto and (2) the Authority's obligations to wind-up the Project as described in Section 3.1.4 of this Agreement. Prior to the expiration of the Term,

the Parties may by mutual agreement extend the Term for an additional 20 years. Following the expiration of the Term, this Agreement shall terminate and be of no further force or effect; provided, however, that this termination shall not affect any right or duty arising from entitlements or approvals granted for the Project, including the Land Use Approvals on the Property, approved concurrently with, or subsequent to, the date this Agreement is executed by all Parties. The Term of this Agreement shall automatically be extended for the period of time of any actual delay resulting from any enactments pursuant to the Reserved Powers or moratoria, or from legal actions or appeals that enjoin performance under this Agreement or act to delay or stay performance under this Agreement (other than bankruptcy or similar procedures), or from litigation relating to the Land Use Approvals.

5.2.1 In the event that the Benefits and Obligations Contract is terminated prior to the expiration of this Agreement, the Authority may terminate this Agreement in whole or in part by notice to the County specifying the extent of termination and its effective date.

5.3 Enforced Delay; Extension of Time of Performance. In addition to specific provisions of this Agreement, whenever a period of time, including a reasonable period of time, is designated within which either Party is required to do or complete any act, matter, or thing, the time for the doing or completion thereof shall be extended by a period of time equal to the number of days during which such Party is actually prevented from, or is unreasonably interfered with, the doing or completion of such act, matter, or thing because of causes beyond the reasonable control of the Party to be excused, including, but not limited to: war; insurrection; riots; floods; earthquakes; fires; casualties; acts of God; litigation and administrative proceedings against the Project (not including any administrative proceedings contemplated by this Agreement in the normal course of affairs); any approval required by the County (not including any period of time normally expected for the processing of such approvals in the ordinary course of affairs); restrictions imposed or mandated by other governmental entities; enactment of conflicting state or federal laws or regulations; judicial decisions; the exercise of the County's Reserved Powers; or similar bases for excused performance that is not within the reasonable control of the Party to be excused (financial inability expected). This Section shall not be applicable to any proceedings with respect to bankruptcy or receivership initiated by or on behalf of the Authority or, if not dismissed within 90 days, by any third parties against the Authority. If written notice of such delay is given to either Party within 30 days of the commencement of such delay, an extension of time for such cause will be granted in writing for the period of the enforced delay, or longer as may be mutually agreed upon.

5.4 CEQA Compliance. This Agreement anticipates a variety of later activities that may result in "projects" within the meaning of CEQA. As of the date of this Agreement, however, no such projects have been identified, explored, formulated, or proposed in any level of meaningful detail. For all of these reasons, environmental review of such projects is thus premature and not required by CEQA. The Parties shall conduct all appropriate environmental review, if necessary, at the time when such review is required, and before the approval or implementation of any project that may result from the activities anticipated in this Agreement. Responsibility for performing

environmental review, including which entity will serve as the "lead agency," will be determined at the appropriate time and in the legally required manner.

5.5 Dispute Resolution. Disputes arising under this Agreement will be resolved, whenever possible, through the process of meeting and conferring in good faith or mediation. To that end, in the event of a dispute as to compliance with any of the provisions, terms and conditions of this Agreement, the Parties agree as follows:

5.5.1 Informal Dispute Resolution Before Mediation.

5.5.1.1 The Parties agree to undertake good faith efforts to resolve any dispute arising in connection with this Agreement within 60 days after the date that notice of such dispute is provided in writing prior to resorting to formal means of dispute resolution.

5.5.1.2 If any dispute is not capable of resolution by and among the representatives of the County and the Authority authorized to administer this Agreement, the authorized representative of the County and the Authority's board chair or his/her authorized representative (who shall be the Executive Director of the Authority or a member of the Authority board) shall meet and confer in an effort to resolve any such dispute.

5.5.1.3 If such efforts between the Parties' designees do not resolve the dispute within 30 days after their commencement, the County and the Authority shall have such other remedies available to them as are provided for in this Agreement or as otherwise exist at law or in equity.

5.5.1.4 No other means of dispute resolution, including mediation, arbitration and litigation, shall be available to the Parties unless they have exhausted the process provided for in this Section 5.5.1.

5.5.2 Mediation.

5.5.2.1 If a dispute arises among the Parties relating to or arising from a Party's obligations under this Agreement that cannot be resolved through informal discussions and meetings as described in Section 5.5.1 of this Agreement, the Parties shall be required to first endeavor to settle the dispute in an amicable manner, using mandatory non-binding mediation under the rules of JAMS, American Arbitration Association, or any other neutral mediation organization agreed upon by the Parties before having recourse in a court of law. Mediation shall be commenced by sending a notice of demand for mediation to the other Party.

5.5.2.2 A single mediator that is acceptable to both Parties shall be used to mediate the dispute. The mediator will be knowledgeable in the subject matter of this Agreement, if possible, and chosen from lists furnished by JAMS, AAA, or any other agreed-upon mediator.

5.5.2.3 The expenses of witnesses for either side shall be paid by the Party producing such witnesses. All mediation costs, including required travel and other expenses of the mediator, and the cost of any proofs or expert advice produced at the direct request of

the mediator, shall be equally shared by the Parties to the dispute unless otherwise directed by the mediator.

5.5.3 Conduct of Mediation.

5.5.3.1 Mediation will be conducted in an informal manner. Discovery shall not be allowed. The discussions, statements, writings and admissions and any offers to compromise during the proceedings will be confidential to the proceedings (pursuant to California Evidence Code §§ 1115-1128; 1152) and will not be used for any other purpose unless otherwise agreed by the Parties in writing. The Parties may agree to exchange any information they deem necessary.

5.5.3.2 The Parties shall have representatives attend the mediation who are authorized to settle the dispute, though a recommendation of settlement may be subject to the subsequent approval of each Party's board or legislative body. The parties may have attorneys, witnesses or experts present.

5.5.3.3 Any resultant agreements from mediation shall be documented in writing. The results of the mediation shall not be final or binding unless otherwise agreed to in writing by the Parties. Mediators shall not be subject to any subpoena or liability and their actions shall not be subject to discovery.

5.5.3.4 Nothing in this Section 5.5 shall relieve the Parties from performing their obligations under this Agreement. The Parties shall be required to comply with this Agreement, including the performance of all disputed activity and disputed payments, pending the resolution of any dispute under this Agreement.

5.5.3.5 Any offers to compromise before or after mediation proceedings will not be used to prove a Party's liability for loss or damage unless otherwise agreed by the Parties in writing (pursuant to California Evidence Code §1152).

5.6 Applicable Law. This Agreement shall be construed and enforced in accordance with the laws of the State of California.

5.7 Amendments. This Agreement may be amended from time to time by mutual consent in writing of the Parties in accordance with Government Code Section 65868.

5.8 Assignment. The rights and obligations of the Authority under this Agreement may not be transferred or assigned in whole or in part without the consent of the County, which shall not be unreasonably withheld, conditioned, or delayed, and upon such assignment the assignor shall be released from the obligations so assigned. The failure of any successor-in-interest to perform the obligations assigned to it may result, at the County's option, in a declaration that this Agreement has been breached with regards to that specific successor-in-interest, and an election to terminate this Agreement as provided for in Section 4.2.3 hereof, as it relates to that successor-in-interest's holding.

5.9 Covenants. The provisions of this Agreement shall constitute covenants that shall run with the land comprising the Property for the benefit thereof, and the burdens and benefits

hereof shall bind and inure to the benefit of all assignees, transfers, and successors to the Parties hereto during the Term of this Agreement.

5.10 Relationship of the Parties. It is understood and agreed by the Parties that the contractual relationship created between the Parties hereunder is that the Authority is an independent contractor and not an agent of the County. Further, the County and the Authority hereby renounce the existence of any form of joint venture or partnership between them and agree that nothing herein or in any document executed in connection herewith shall be construed as making the County and the Authority joint venturers or partners.

5.11 Notices. Any notice or communication required under this Agreement between the County or the Authority must be in writing and shall be given either personally or by registered or certified mail, return receipt requested. If given by registered or certified mail, the same shall be deemed to have been given and received on the first occur of (i) actual receipt by any of the addresses designated below as the party to whom notices are to be sent, or (ii) five (5) days after a registered or certified letter containing such notice, properly addressed, with postage prepaid, is deposited in the United States mail. If personally delivered, a notice shall be deemed to have been given when delivered to the party to whom it is addressed. Any party hereto may at any time, by giving 10 days written notice to the other party hereto, designate any other address in substitution of the address, or any additional address, to which such notice or communication shall be given. Such notices or communication shall be given to the parties at their addresses set forth below:

If to the County:

County of Colusa
546 Jay Street, Suite 108
Colusa, CA 95932
ATTN: County Administrative Officer

with copies to:

County of Colusa
1213 Market Street
Colusa, CA 95932
ATTN: Community Development Director

If to the Authority:

Sites Project Authority
P.O. Box 517
122 Old Highway 99 West
Maxwell, CA 95955
ATTN: Executive Director
jbrown@sitesproject.org

with copies to:

and to:

5.12 Recordation. As provided in Government Code Section 65868.5, the Clerk of the County shall record a copy of this Agreement with the Recorder of the County no later than 10 days after the County enters into the Agreement. Upon expiration of the Term of this Agreement, the Clerk of the County shall record a written instrument providing notice of the termination of this Agreement. The Authority shall provide the Clerk of the County with the fees for such recordings prior to or at the time of such recordings if such fees are assessable.

5.13 Constructive Notice and Acceptance. Every person who now or hereafter owns or acquires any right, title, interest in or to any portion of the Property, is and shall be conclusively deemed to have consented and agreed to every term, provision and condition contained herein, whether or not any reference to this Agreement is contained in the instrument by which such person acquired an interest in the Property.

5.14 Successors and Assigns. The provisions of this Agreement shall be binding upon and shall inure to the benefit of the Parties, any subsequent owner of all or any portion of the Property, and their respective successors and assignees during the Term of this Agreement.

5.15 Severability. If any provisions, conditions, or covenants of this Agreement, or the application thereof to any circumstances of either Party, shall be held invalid or unenforceable, the reminder of this Agreement or the application of such provision, condition, or covenant to persons or circumstances other than those as to whom or which it is held invalid or unenforceable shall not be affected thereby and shall be valid and enforceable to the fullest extent permitted by law.

5.16 Time of the Essence. Time is of the essence for each provision of this Agreement of which time is an element.

5.17 Waiver. No waiver of any provision of this Agreement shall be effective unless in writing and signed by a duly authorized representative of each Party and refers expressly to this Section. No waiver of any right or remedy with respect to any occurrence or event shall be deemed a waiver of any right or remedy with respect to any other occurrence or event.

5.18 No Third Party Beneficiaries. The only Parties to this Agreement are the County and the Authority and their successors-in-interest. There are no third party beneficiaries and this Agreement is not intended and shall not be construed to benefit or be enforceable by any other person or entity whatsoever.

5.19 Entire Agreement. This Agreement sets forth and contains the entire understanding and agreement of the Parties, and there are no oral or written representations, understandings, or ancillary covenants, undertakings or agreements that are not contained or expressly referred to herein (or any such representations, understandings, or ancillary covenants, undertakings or agreements arc integrated in this Agreement) and no testimony or evidence of any such representations, understandings, or covenants shall be admissible in any proceedings of any kind or nature to interpret or determine the terms, provisions or conditions of this Agreement.

5.20 Legal Advice, Neutral Interpretation, Headings, Table of Contents, and Index. Each Party acknowledges that it has received independent legal advice from its attorneys with respect to the advisability of executing this Agreement and the meaning of the provisions hereof. The provisions of this Agreement shall be construed as to their fair meaning, and not for or against any Party based upon any attribution to such Party as the source of the language in question. The headings, table of contents, and index used in this Agreement are for the convenience of reference only and shall not be used in construing this Agreement.

5.21 Discretion to Encumber. This Agreement shall not prevent or limit the Authority in any manner, at its sole discretion, from encumbering the Project or any portion of the Authority's

right in land for the Project by any mortgage, deed of trust, or other security device securing financing with respect to the Project or its improvements.

5.22 Expedited Processing. The County agrees to cooperate with the Authority in the processing of any legal action seeking specific performance, declaratory relief, or injunctive relief, to set court dates at the earliest practicable date(s), and not to cause delay in the prosecution/defense of the action, provided such cooperation shall not require any Party to waive any rights; but such cooperation shall not include bringing an action in the name of the County or sharing the expense of any such action by the County.

5.23 Counterparts; Electronic Execution. This Agreement may be executed in duplicate originals, each of which is deemed to be an original, but all of which, together, shall constitute but one and the same instrument. The Parties acknowledge that executed copies of this Agreement may be exchanged by facsimile or other electronic format (e.g. "pdf," "tif" or "DocuSign") and that the signatures on such copies shall be deemed to be effective and valid as original signatures. This Agreement, not counting the Cover Page, Table of Contents or Index, consists of [_] pages and [_] Exhibits.

5.24 Controlling Law Venue. *This Contract is made in the County of Colusa, State of California. The parties specifically agree to submit to the jurisdiction of the Superior Court of California for the County of Colusa."*

IN WITNESS WHEREOF, the Parties hereto have executed this Agreement as of the date first written above.

Sites Project Authority
By: _____
Jerry Brown,
Executive Director

APPROVED AS TO FORM:
By: _____
Alan Doud, Authority General Counsel

County of Colusa
By: _____
Daurice K. Smith,
Board of Supervisor, Chair

APPROVED AS TO FORM:
By: _____
Richard Stout, County Counsel

EXHIBIT A

Permit Requirement Matrix

Sites Reservoir Project Components Requiring Land Use Entitlements, Permits or Other Local Government Approvals

	Land Use Entitlement[1]	Williamson Act Contract Non-Renewal	Encroachment Permit[2]	Surface Mining and Reclamation Act Permit[3]	Building Permit	Grading Permit	Well and Waste Disposal	Retail Food Safety[4]	Air Quality Permit[5]	Transportation Permits[6]	Comments
Colusa County											
Sites Reservoir Project water storage and conveyance facilities, including: • Funks Pipelines • Funks and TRR West Easement • TRR West • On-site Quarry • Rock Processing • Saddle Dams 1 and 2 • Saddle Dam Access Roads • I/O Works • Golden Gate Dam • Sites Dam	Local zoning not applicable; General Plan designation can be overruled	Yes	Yes	Yes	Not Applicable	Yes	Yes	Not Applicable	Yes	Yes	Pursuant to California Code Section 53091(e) (https://law.justia.com/citations.html) "Zoning ordinances of a county or city shall not apply to the location or construction of facilities for the production, generation, storage, treatment, or transmission of water, or for the production or generation of electrical energy, facilities that are subject to Section 12808.5 of the Public Utilities Code, or electrical substations in an electrical transmission system that receives electricity at less than 100,000 volts." Includes permits associated with the demolition of existing buildings and abandonment of wells, underground storage tanks, on-site sewage disposal from Colusa County Environmental Health Division. The land use designation for this area is Agricultural and zoned Exclusive Agriculture, Foothill Agriculture, Rural Services, and Upland Conservation; over 10,000 acres are under Williamson Act Contracts.
Administration/Operations Building: • one-story, 3,400 square feet building • septic system, potable water provided wells, and electricity obtained from the Funks Reservoir switchyard	Yes, based on non-federal land location	No	TBD	Not Applicable	Yes	Yes	Yes	TBD	Yes	Yes	Currently proposed near Funks Reservoir and will require potable water and waste disposal facilities. May be located on federal land but not yet determined.
Maintenance/Storage Building: • one-story, 2,700 square feet building • septic system, potable water provided wells, and electricity obtained from the Funks Reservoir switchyard	Yes, based on non-federal land location	No	TBD	Not Applicable	Yes	Yes	Yes	Not Applicable	Yes	Yes	Currently proposed near Funks Reservoir and will require potable water and waste disposal facilities. May be located on federal land but not yet determined.

[1] Possible Land Use Entitlements include Use Permits, General Plan Amendments, and/or Zoning Amendments. NOTE: Not applicable to project components that will be "directly and immediately" used to store and transmit water and are not subject to zoning and building ordinances pursuant to California Code Sections 53091 and 53096. Pursuant to California Code Section 65402(c), a local agency may overrule county general plans that would obstruct its construction of any building or structure for a public purpose.
[2] Includes use of local jurisdiction's right-of-way such as installation of pipeline across or within roadways.
[3] Mining activities are regulated in California by the Surface Mining and Reclamation Act (SMARA) and the Lead Agency Review and Assistance (LARA) Program; Colusa County requires large- and small-scale mineral and natural gas extraction, processing, and reclamation operations to obtain a Conditional Use Permit.
[4] Colusa County Environmental Health is responsible for permitting and inspecting retail food facilities for compliance with the California Retail Food Code.
[5] Includes Authority to Construct, Permit to Operate from local air districts. NOTE: Yolo-Solano Air Quality Management District is comprised of the 2 counties and seven incorporated cities; Colusa and Glenn have county-specific air districts.
[6] Related to transport of heavy or oversized loads on county roads.

Visitors Center	Yes	TBD	TBD	Not Applicable	Yes	Yes	Yes	TBD	Yes	TBD	Precise location not determined, possibly located in the vicinity of the Reservoir and will require potable water and waste disposal facilities.
Improvements to existing roads, including: • Delevan Road Repairs to existing roads, including: • Maxwell Sites Road New roads, including: • Sites Lodoga Road and Bridge • Sites Lodoga Temporary Detour Road • Huffmaster Road Realignment • Comm Road • Day Use Boat Ramp Access Road • Peninsula Hills Recreation Area Access Road • Stone Corral Creek Recreation Area Access Road	Not Applicable	Yes	Yes	Not Applicable	Not Applicable	Yes	Not Applicable	Not Applicable	Yes	Yes	Road improvements include shoulder improvements, intersection widening, structure improvements, new or improved gravel roadway, and paving; other public local roads including Sites Lodoga Road, Huffmaster Road, Comm Road South, and recreation area roads will be relocated or developed to accommodate project facilities. Repairs to existing roads are intended to return roads to pre-project conditions without changes in geometrics. Construction access and maintenance via onsite roads, including Funks Construction Access Road, Sites Base Dam Access Road, Golden Gate Dam Crest Access Road, I/O Tower Access Road, Funks PGP Maintenance Access Road, Sites Dam Crest Access Road, Saddle Dam Road, and Funks Construction Access Tehama-Colusa Canal Bridge.
Recreational Facilities: • Day-Use Boat Ramp • Peninsula Hills Recreation Area • Stone Corral Creek Recreation Area • Associated parking • Access to electricity • Potable water and toilet facilities • Emergency response facilities	Yes, including Minor Use Permit for Public Recreational Facilities and Campgrounds; Full Use Permit for Boat Ramps and Landings	Yes	Yes	Not Applicable	Yes	Yes	Yes	Yes	Yes	Yes	Permit requirements are based on conceptual layout and location and assume that recreational facilities would be subject to local building permits.
Glenn County											
Sites Reservoir water storage and conveyance facilities, including: • Saddle Dams 1, 3, 5, 6, 8A, and 8B • Saddle Dikes 1 and 2	Local zoning not applicable; General Plan designation can be overruled	Yes	Yes	Not Applicable	Not Applicable	Yes	Not Applicable	Not Applicable	Yes	Yes	Pursuant to California Code Section 53091(e) (https://law.justia.com/citations.html) "Zoning ordinances of a county or city shall not apply to the location or construction of facilities for the production, generation, storage, treatment, or transmission of water, or for the production or generation of electrical energy, facilities that are subject to Section 12808.5 of the Public Utilities Code, or electrical substations in an electrical transmission system that receives electricity at less than 100,000 volts." The existing land uses are Foothill Agriculture/Forestry and Intensive Agriculture; over 2,000 acres are under Williamson Act Contracts.
Improvements to existing roads, including: • Road 68 • Road 69 • Road D	Not Applicable	Yes	Yes	Not Applicable	Not Applicable	Yes	Not Applicable	Not Applicable	Yes	Yes	Improvements to existing roads to support construction include shoulder improvements, intersection widening, structure improvements, and paving. Construction and maintenance on-site access via North Saddle Dam Road, South Saddle Dam Road and North Access Road

Yolo County											
Release Facilities: • TC Canal Intake • Dunnigan Pipeline • CBD Outlet	Not Applicable	No	Yes	Not Applicable	Not Applicable	Yes	TBD	Not Applicable	Yes	Yes	Pursuant to California Code Section 53091(e) (https://law.justia.com/citations.html) "Zoning ordinances of a county or city shall not apply to the location or construction of facilities for the production, generation, storage, treatment, or transmission of water, or for the production or generation of electrical energy, facilities that are subject to Section 12808.5 of the Public Utilities Code, or electrical substations in an electrical transmission system that receives electricity at less than 100,000 volts." In Yolo County, most of the facilities would be located underground and would not conflict with existing land use or zoning designations; these land uses/zoning do not prohibit this type of infrastructure.
Repairs to existing roads, including: • Road 7A • Road 8 • Road 89A • Road 90 • Road 99W	Not Applicable	No	Yes	Not Applicable	Not Applicable	Yes	TBD	Not Applicable	Yes	Yes	Improvements to existing roads to support construction include shoulder improvements, intersection widening, structure improvements, and paving. Construction access will be accessed from existing roads; maintenance would occur through a Project right-of-way easement. Repairs to existing roads are intended to return roads to pre-project conditions without changes in geometrics.

Source: Information in this table is derived from the Sites Reservoir Final EIR/EIS and updated with roads identified through current design efforts, interpretation of CA Code, and ongoing coordination with local agencies; TBD = To Be Determined (as design advances)

EXHIBIT B

Project Specific Information and Example of Calculation for Payment in Lieu of Taxes

Payment in lieu of Taxes Section 3.3.143.3.14	This amount is currently estimated to be $. 850,000 annually upon acquiring all land in Colusa County for the Project. Based on 2023 tax assessment basis. This amount shall be adjusted at such time that the property transfers from the private landowner to the Authority based upon the then current property tax basis for the properties removed from the County tax rolls. This amount shall be further adjusted annually at the rate of growth provided by the county assessor for the County.
Improvement Standards Section 3.2.5	• AASHTO – Guidelines for Geometric Design of Very Low-Volume Local Roads • AASHTO – A Policy on Geometric Design of Highways and Streets • Colusa County Department of Public Works – Standard No. RS-3 • AASHTO LRFD Bridge Design Specifications with California Amendments including the Caltrans Bridge Design Practice •

Example of Calculation for Payment in Lieu of Taxes

Property 1/Year 1 (sale to Project in Year 1):

1. Property tax based on Unrestricted Assessed Value (without Williamson Act adjustment) times the percentage of property sold to Project = Assessed Value Attributed to the Project
2. Assessed Value Attributed to the Project times 1% Ad Valorem Property Tax = Base Property Tax Value
3. Assessed Value Attributed to the Project times Yuba College Bonds Ad Valorem = Yuba College Base Tax Value
4. Special District Charges times percentage of property sold to the project = Special District Charge Base Value
5. (Base Property Tax Value + Yuba College Base Tax Value+ Special District Base Value) times the portion of the tax year remaining at time of sale = Prorated Tax Loss year one
6. Project pays PILT of the Prorated Tax Loss within 30 days after receiving a properly submitted and complete invoice for the foregone property tax from the County Auditor-Controller.

Property 1 Year 2:

1. (Base Property Tax Value + Yuba College Base Tax Value) times the Property Tax Growth Factor as determined by the County's Assessor = Annual Property Tax Base
2. Special District Charge times any growth factor identified in enabling measure = Annual Special District Base.
3. Annual Property Tax Base plus Annual Special District Base = PILT
4. Project pays PILT within 30 days after receiving a properly submitted and complete invoice for the foregone property tax from the County Auditor-Controller.

Example based on 2024 assessed value and sale occurring with six months remaining in the current tax year:

Year 1 Step 1:

APN_	Tax Rate Area	Total Parcel Acreage	Total Project Acreage	% of Parcel to Project	Total Unres-tricted Assessed Value	Assessed Value Attributed to Project	Ad Valorem Property Tax	Yuba College Bonds (.026547%)
014-XX	066-006	535.35	99.291	18.55%	454,945	84,379	843.79	22.40

Base Property Tax Value $843.79 (Step 2) + Yuba College Tax Base Value $22.40 (Step 3) = $866.19

Special District Charge Base Value $0.00 (Step 4) times 18.55% = $0.00

Total annual loss $866.19 times assumed 6-month loss = $433.10 (Step 5)

Project pays $433.10 in PILT to County (Step 6)

Year 2
Annual Property Tax Base (County and College) $866.19 times Assessor's Growth Factor of 2% = $883.51 (Step 1)

Annual Special District Base $0.00 x specified growth factor = $0.00 (Step 2)

$866.19 + $0.00 = $866.19 (Step 3)

Project pays $866.19 to County (Step 4)

This table is for illustration purposes only. It assumes that the sale of each parcel is proportional to the percentage of each parcel included in the Project footprint and that the proportionate value of the parcel for in-lieu payment is based on the assessed value prior to the sale. The figure also assumes that sale of the project percentage of each of the parcels is completed in the current tax year. Only new or additional assessments beyond those shown here and applied by the County prior to purchase of the property by the Project shall be included in the Project's PILT.

COLUSA COUNTY - Gross Potential Property Tax Loss Attributed to Project - 2024 Values

Tax Year	Assumed PT Growth Factor	County	Yuba College Bonds (.026547%)	Schools (Incl. ERAF)	Special Districts	Colusa Ground-water Authority	City	Total
2024		$21,814	$ 2,176	$ 48,663	$ 6,758	$ 182	$ 4,731	$ 84,324
2025	2%	22,250	2,219	49,636	6,893	186	4,825	86,010
2026	2%	22,695	2,264	50,629	7,031	189	4,922	87,730
2027	2%	23,149	2,309	51,641	7,171	193	5,020	89,485
2028	2%	23,612	2,355	52,674	7,315	197	5,121	91,275
2029	2%	24,085	2,402	53,728	7,461	201	5,223	93,100
2030	2%	24,566	2,450	54,802	7,610	205	5,328	94,962
2031	2%	25,058	2,499	55,898	7,763	209	5,434	96,861
2032	2%	25,559	2,549	57,016	7,918	213	5,543	98,799
2033	2%	26,070	2,600	58,157	8,076	217	5,654	100,775
2034	2%	26,591	2,652	59,320	8,238	222	5,767	102,790
2035	2%	27,123	2,706	60,506	8,403	226	5,882	104,846
2036	2%	27,666	2,760	61,716	8,571	231	6,000	106,943
2037	2%	28,219	2,815	62,951	8,742	235	6,120	109,082
2038	2%	28,783	2,871	64,210	8,917	240	6,242	111,263
2039	2%	29,359	2,929	65,494	9,095	245	6,367	113,489
2040	2%	29,946	2,987	66,804	9,277	250	6,494	115,758
2041	2%	30,545	3,047	68,140	9,463	255	6,624	118,073
2042	2%	31,156	3,108	69,503	9,652	260	6,757	120,435
2043	2%	31,779	3,170	70,893	9,845	265	6,892	122,844
2044	2%	32,415	3,233	72,311	10,042	270	7,030	125,300
2045	2%	33,063	3,298	73,757	10,243	276	7,170	127,807
2046	2%	33,724	3,364	75,232	10,447	281	7,314	130,363
2047	2%	34,399	3,431	76,737	10,656	287	7,460	132,970
2048	2%	35,087	3,500	78,271	10,870	293	7,609	135,629
2049	2%	35,789	3,570	79,837	11,087	298	7,761	138,342
2050	2%	36,504	3,641	81,433	11,309	304	7,917	141,109
2051	2%	37,234	3,714	83,062	11,535	311	8,075	143,931
2052	2%	37,979	3,788	84,723	11,766	317	8,236	146,810
2053	2%	38,739	3,864	86,418	12,001	323	8,401	149,746
2054	2%	39,513	3,941	88,146	12,241	330	8,569	152,741
								$3,573,589

Distribution of Property Tax Attributed to Schools:

Above calculation includes the AB8 share of property taxes that go to schools in the percentages below.

Note: Property tax loss for schools exists in Year 1 only, the state makes up the property tax loss in the Local Control Funding Formula in subsequent years.

Tax Year	Princeton Unified (1.1424%)	Stonyford Unified (0.2625%)	Yuba College (12.4388%)	Colusa Unified (10.2363%)	Maxell Unified (3.7989%)	Pierce Unified (9.7218%)	Williams Unified (8.6720%)	Supt. Schools-Glenn (0.2788%)	Supt. Schools-Colusa (1.1058%)	Schools ERAF (11.7125%)	Total Schools
2024	$ 936	$ 215	$ 10,196	$ 8,390	$ 3,114	$ 7,969	$ 7,108	$ 229	$ 906	$ 9,600	$ 48,663

ANNEX 1

to EXHIBIT B

Project Site Map

FOR COLUSA COUNTY:

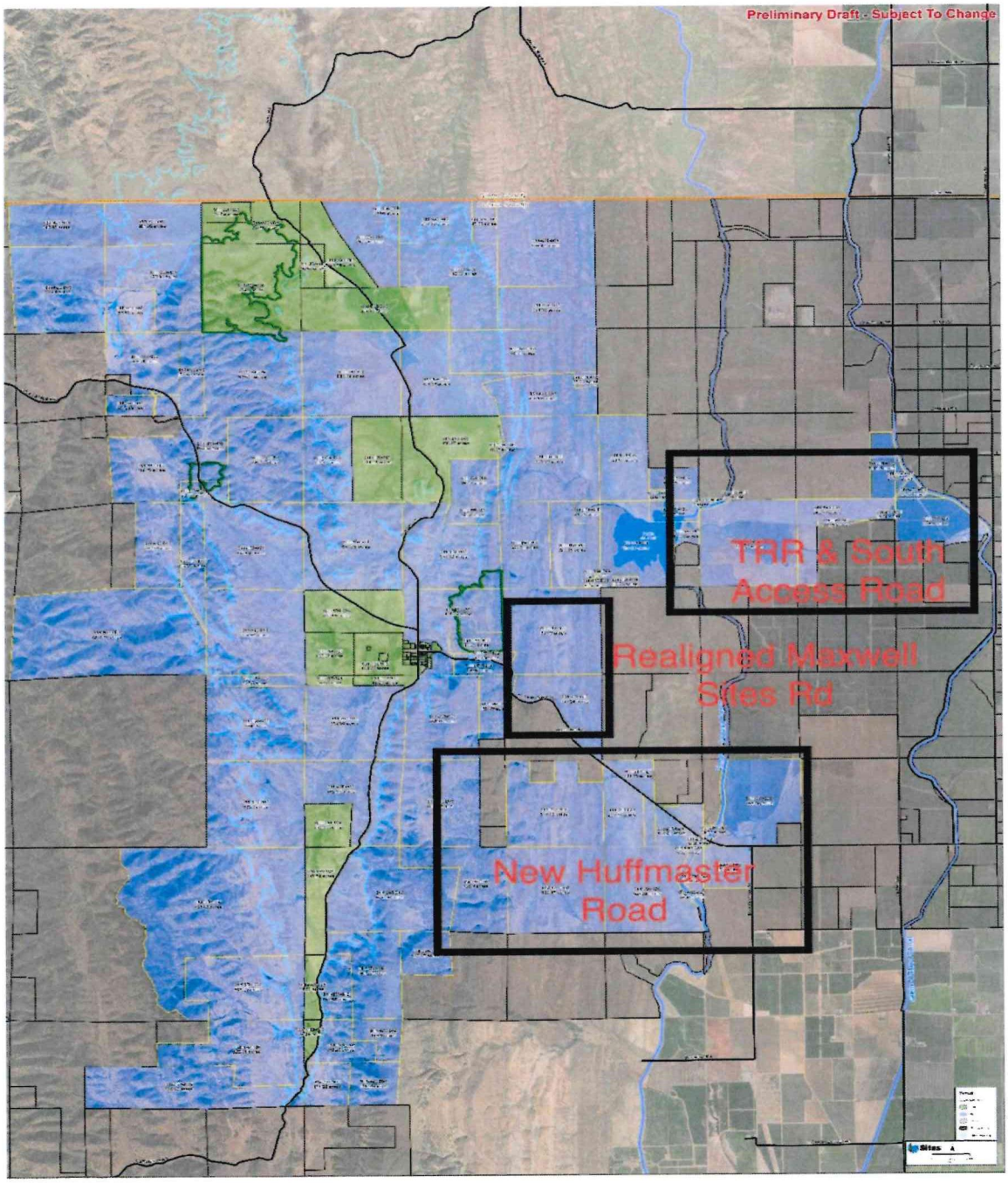

FOR GLENN COUNTY:

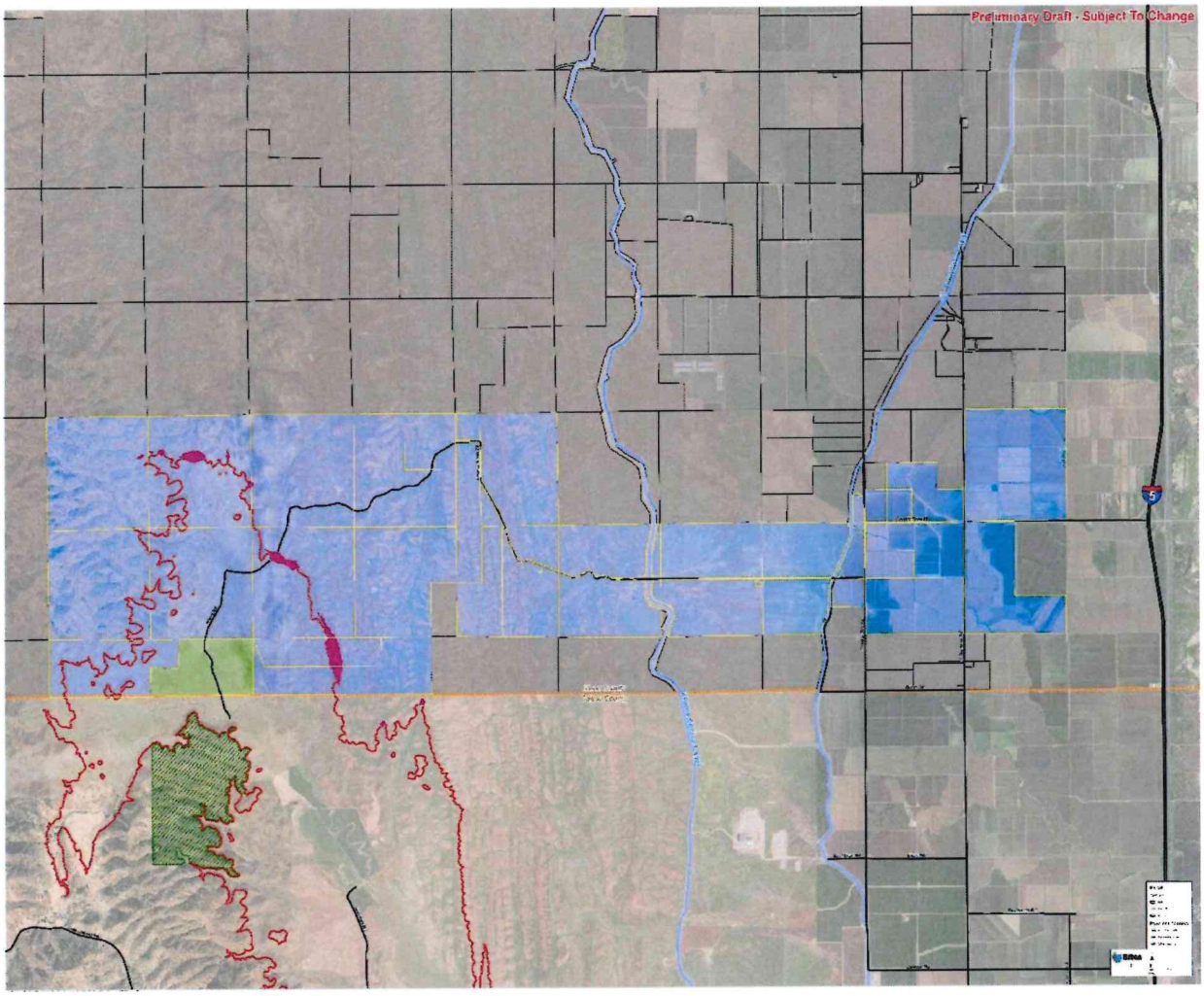

EXHIBIT C

Local Roads and Crossing Structures

					Existing					Proposed					Type of Use			
County	Road Name	Proposed Work	Length of Road Affected (miles)	Duration of Use	Surface Type	# of Lanes/Shld	Lane Width (ft)	Shld Width (ft)	Road Width (ft)	Surface Type	# of Lanes/Shld	Lane Width (ft)	Shld Width (ft)	Road Width (ft)	Public/Local Road	Construction Access	Maintenance Access	Recreational
Crane	County Road 6B	Existing road improvements	3.83	6-7 years	Paved asphalt	2	10-11	9.0-9	20-23	Paved asphalt	2	12	4	32	x	x		
Crane	County Road 6B	Existing road improvements	3.11	6-7 years	Paved asphalt	2	8-12	n/a	16-23	Paved asphalt	2	12	4	32	x	x		
Crane	County Road D	Existing road improvements	0.5	6-7 years	Paved asphalt	2	12	n/a	24	Paved asphalt	2	12	4	32	x	x		
Crane	Dewlyn Road	Existing road improvements	3.19	6-7 years	Paved asphalt	2	10-12	9.0-9	20-23	Paved asphalt	2	12	4	32	x	x		
Crane	Mimwell Sites Road	Existing road repair	1.25	6-7 years	Paved asphalt	2	12	0.5	24-25	Unpaved aggregate/gravel	n/a	25	n/a	25		x	x	
Crane	Mimwell Sites Road	Existing road repair	2.29	4-5 years	Paved asphalt	2	12	0.5	24-25	Paved asphalt	2	12	0.5	24-25	x	x		
Crane	Sites Lodges Road	New road	4.59	4-5 years	Paved asphalt	2	12	0.5	24-25	Paved asphalt	2	12	4	32	x	x		
Crane	Sites Lodges Temporary Drainage Road	New road (Temporary Drainage)	1.28	2-5 years	n/a	n/a	n/a	n/a	n/a	Paved asphalt	2	12	4	32	x			x
Crane	Huffmaster Road Realignment	New road	0.25	4-5 years	Unpaved aggregate/gravel	n/a	25	n/a	25	Unpaved aggregate/gravel	2	12	2.1	25	x			
Crane	Cohen Road	New road	1.61	1-2 years	Unpaved dirt/soil	n/a	17	n/a	17	Unpaved aggregate/gravel	1	12	1.5	15			x	
Crane	Day Star Inlet Ramp Access	New road	n/a	n/a	n/a	n/a	n/a	n/a	n/a	Paved asphalt	2	15	n/a	30				x
Crane	Peninsula Hills Recreational Road	New road	n/a	n/a	n/a	n/a	n/a	n/a	n/a	Paved asphalt	2	15	n/a	30				x
Crane	Jeanne Carroll Recreational Access Road	New road	n/a	n/a	n/a	n/a	n/a	n/a	n/a	Paved asphalt	2	15	n/a	30				x
Vista	Road 7A	Existing road repair	0.25	2 years	Paved asphalt	n/a	16-30	n/a	16-30	Paved asphalt	n/a	28	n/a	30	x	x		
Vista	Road 8	Existing road repair	0.84	3 years	Paved asphalt	2	12	0.5	24-25	Paved asphalt	2	12	6-7	30	x	x		
Vista	Road 8BA	Existing road repair	0.26	2 years	Paved asphalt	n/a	16-28	n/a	26-32	Paved asphalt	n/a	28	n/a	30	x	x		
Vista	Road 9B	Existing road repair	0.48	3 years	Paved asphalt	n/a	22-34	n/a	22-34	Paved asphalt	n/a	28	2	34	x	x		
Vista	Road 9BW	Existing road repair	0.95	2 years	Paved asphalt	2	12	6-11	45	Paved asphalt	2	12	6-11	45	x	x		

Structure/Crossing	Route	Condition	Proposed Work	Design Live Loading
North Access Road (near Road 69 split)*	Road 69	Existing Bridge - Condition Unknown Major modification required (Existing Width significantly less than required)	New wider bridge accommodating design loading.	HL93 and Permit design Load
Tehama-Colusa Canal*	Road 69	Existing Bridge - Condition Unknown Major modification required (Existing Width significantly less than required)	New wider bridge accommodating design loading.	HL93 and Permit design Load
East of Tehama-Colusa Canal	Road 69	Existing Culvert - Condition Unknown	New culvert accommodating an improved widen road.	HL93 and Permit design Load
West of Glenn-Colusa Canal	Road 69	Existing Culvert - Condition Unknown Major modification required (Existing Width significantly less than required)	New culvert accommodating an improved widen road.	HL93 and Permit design Load
Glenn-Colusa Canal*	Road 69	Existing Bridge - Condition Unknown Major modification required (Existing Width significantly less than required)	New wider bridge accommodating design loading.	HL93 and Permit design Load
Near the intersection of Road D/Road 68	Road D	Existing Culvert - Condition Unknown Major modification required (Existing Width significantly less than required)	New culvert accommodating an improved widen road.	HL93 and Permit design Load
Near the intersection of Road D/Road 68*	Road D	Existing Culvert - Condition Unknown Major modification required (Existing Width significantly less than required)	New wider bridge accommodating design loading.	HL93 and Permit design Load
West of the intersection of Road 68/Road F	Road 68	Existing Culvert - Condition Unknown	Potentially new culvert accommodating design loading.	HL93 and Permit design Load
West of I-5*	Road 68	Existing Bridge - Condition Unknown	Potentially new bridge accommodating design loading.	HL93 and Permit design Load
Glenn-Colusa Canal*	Delevan Road Extension	Existing Bridge - Condition Unknown Major modification required (Existing Width significantly less than required)	New wider bridge accommodating design loading.	HL93 and Permit design Load
Delvan Road (Private) over Unnamed Creek*	Delevan Road Extension	Existing Bridge - Condition Unknown Major modification required (Existing Width significantly less than required)	New wider bridge accommodating design loading.	HL93 and Permit design Load
Sites Reservoir West Bridge*	Sites Lodoga Road Realignment	New Bridge	New bridge accommodating design criteria and loading	HL93 and Permit design Load
Sites Reservoir East Bridge*	Sites Lodoga Road Realignment	New Bridge	New bridge accommodating design criteria and loading	HL93 and Permit design Load
Bird Creek (22C-0039)*	Road 90	Existing Bridge - Condition Unknown	Potentially new bridge accommodating design loading.	HL93 and Permit design Load

*Bridge improvements will be designed to Caltrans Standards (Caltrans review and approval will be coordinated by County)

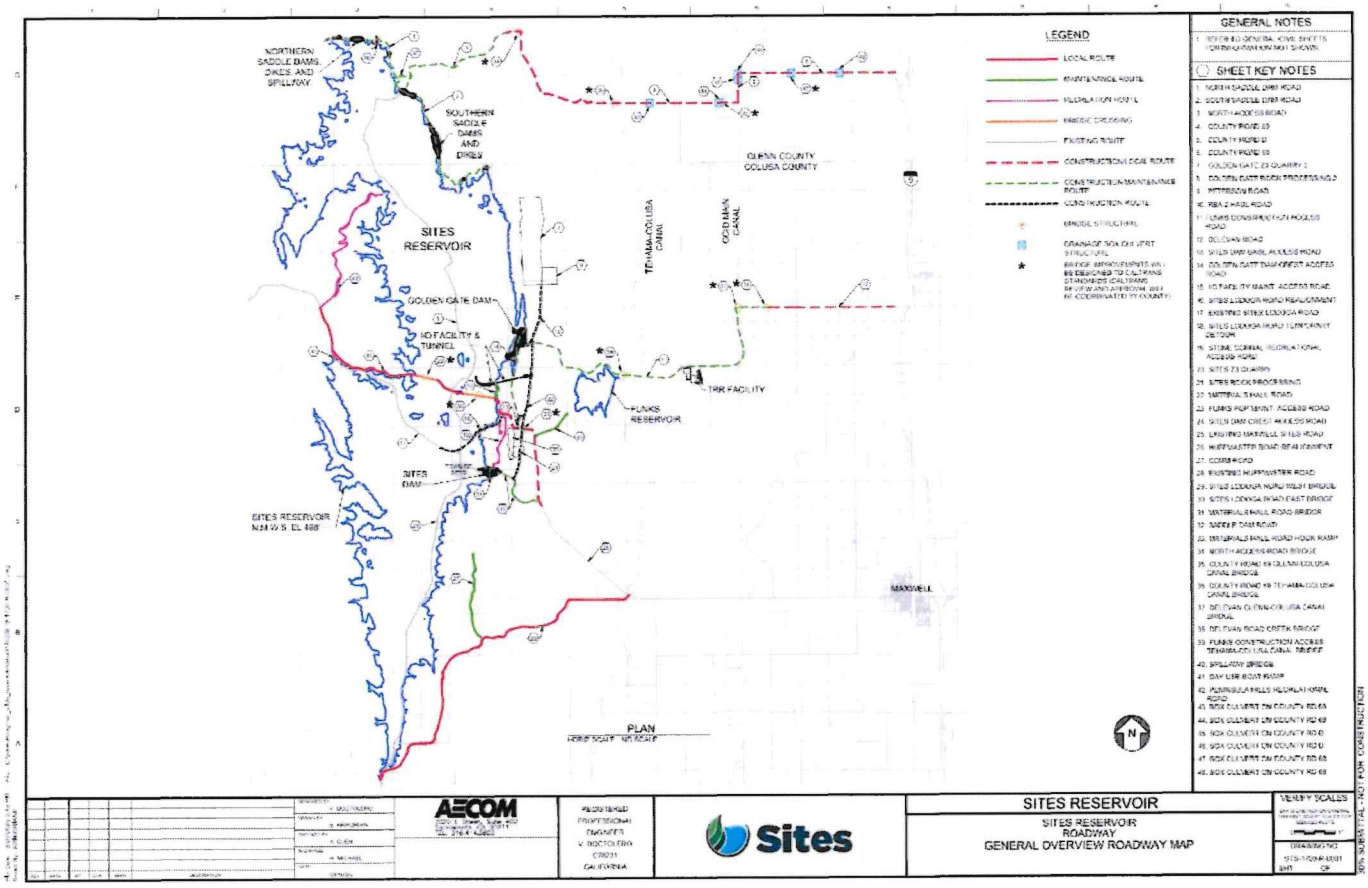
GENERAL NOTES
SHEET KEY NOTES
LEGEND
NORTHERN SADDLE DAMS, DIKES AND SPILLWAY
SOUTHERN SADDLE DAMS AND DIKES
SITES RESERVOIR
GLENN COUNTY COLUSA COUNTY
TEHAMA-COLUSA CANAL
GOLDEN GATE DAM
HD FACILITY & TUNNEL
TRR FACILITY
FUNKS RESERVOIR
SITES DAM
SITES RESERVOIR NAVD 88 EL 488
MAXWELL
PLAN
AECOM
Sites
SITES RESERVOIR
SITES RESERVOIR
ROADWAY
GENERAL OVERVIEW ROADWAY MAP
VERIFY SCALES

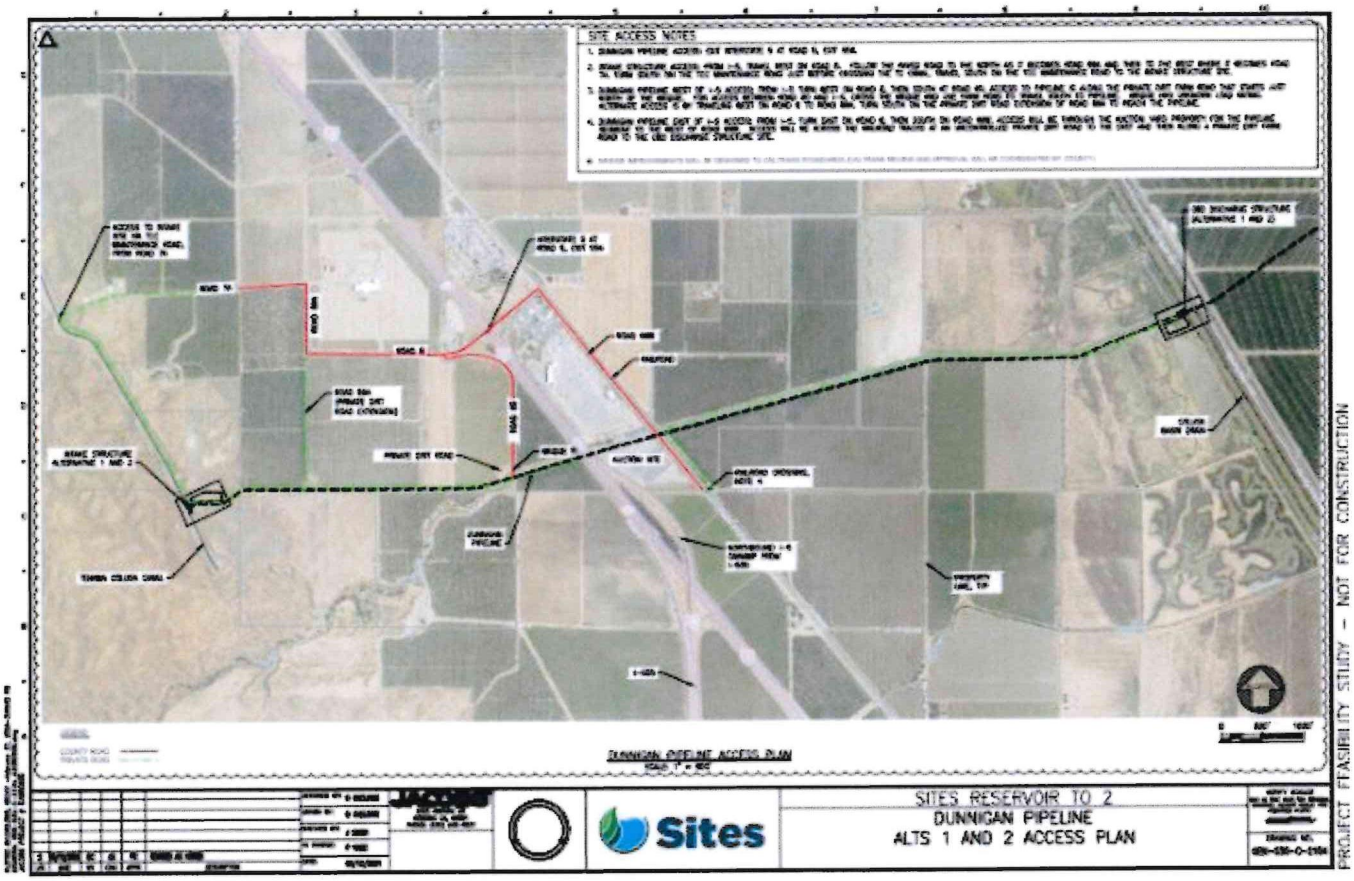
SITE ACCESS NOTES
SITES RESERVOIR TO 2
DUNNIGAN PIPELINE
ALTS 1 AND 2 ACCESS PLAN
Sites
PROJECT FEASIBILITY STUDY – NOT FOR CONSTRUCTION

Exhibit D

New Local Roads and Crossing Structures – Design, Construction, Maintenance, and County Acceptance Requirements

1. Design Standards and Requirements

1.1 All New Roads and Crossing Structures constructed by the Authority within the County's public right of way shall be designed and engineered in compliance with the latest edition (as of 2025) of the following:

(a) Colusa County Standards and Specifications;
(b) applicable Caltrans/AASHTO design and safety standards, including load rating requirements;
(c) applicable federal and state accessibility standards;
(d) site-specific geotechnical and hydrologic conditions, as approved by the County Engineer.

1.2 The Authority shall submit detailed plans and specifications for New Roads and Crossing Structures that are within the public right of way for review and written approval by the County Engineer prior to commencement of construction.

2. Construction Requirements

2.1 The Authority shall construct the New Roads and Crossing Structures in compliance with the approved plans and specifications and in accordance with all applicable laws, ordinances, and regulations.

2.2 The Authority shall ensure that all contractors and subcontractors are properly licensed and bonded in accordance with California law.

2.3 The Authority shall be responsible for all testing and quality control during construction, including compaction testing, concrete strength testing, and other materials testing as required by the County Engineer.

3. Inspection and Testing Rights

3.1 The County shall have the right, but not the obligation, to inspect the New Roads and Crossing Structures at any time during construction to confirm compliance with the approved plans, specifications, or standards.

3.2 The Authority shall provide the County Engineer or authorized representatives with reasonable access to the construction site and all relevant records, test results, and certifications.

3.3 If the County determines that any aspect of the work does not comply with the approved plans, specifications, or standards, the Authority shall promptly correct such deficiencies at its sole cost.

4. Ownership Transfer and Acceptance

4.1 Upon completion of construction, the Authority shall provide to the County:

(a) as-built drawings certified by a licensed civil engineer;
(b) a complete set of maintenance manuals and warranties for all structural components;
(c) written certification from a licensed engineer that the New Roads and Crossing Structures were

constructed in accordance with approved plans and applicable standards;
(d) proof of all required environmental clearances and permits for the New Roads and Crossing Structures.

4.2 The County shall conduct a final inspection of the New Roads and Crossing Structures. If the New Roads and Crossing Structures are found to meet the requirements of this Exhibit D, the County shall issue a Notice of Acceptance, at which time ownership and maintenance responsibility shall transfer to the County.

4.3 The Authority shall warrant all New Roads and Crossing Structures against defects in materials and workmanship for a period of one year from the date of Notice of Acceptance. During this period, The Authority shall, at its own expense, repair or replace any defective work to the satisfaction of the County.

4.4 The County's Notice of Acceptance shall represent full and complete ownership transfer of the specific New Road and Crossing Structure to the County. The Authority and County agree that the County may issue Notice(s) of Acceptance of New Roads and Crossing Structures which may occur intermittently and as portions of all New Roads and Crossing Structures are complete.

5. Maintenance Prior to Transfer

5.1 Until issuance of the Notice of Acceptance for any portion, the Authority shall be solely responsible for the maintenance, repair, and security of the New Roads and Crossing Structures, including erosion control and stormwater management.

6: Special Provisions for the Sites Lodoga Road Bridge

6.1 Enhanced Design Requirements - The Sites Lodoga Road Bridge ("Bridge") shall be designed to meet the minimum design life expectancy of 75 years for reinforced concrete structures and shall incorporate features that minimize long-term maintenance, including but not limited to:

- Corrosion-resistant materials (e.g., epoxy-coated or stainless-steel rebar)
- Deck and joint systems engineered to minimize water infiltration
- Redundant structural capacity to accommodate future loading standards
- Flood and scour resilience consistent with Caltrans' guidance for critical infrastructure

The Bridge design shall comply with the most current (as of 2025) Caltrans Bridge Design Manual and AASHTO LRFD Bridge Design Specifications.

6.2 Independent Peer Review - Prior to final design approval for the Bridge, the Authority shall retain an independent, qualified bridge engineering firm (approved by the County Engineer) to conduct a third-party peer review. The peer reviewer shall certify that the final Bridge design:

- Meets or exceeds applicable standards set out in this Exhibit D
- Reasonably minimizes anticipated life-cycle maintenance costs
- Appropriately accounts for site-specific risks including flooding, seismic activity, and geotechnical conditions

6.3 Transfer Conditions - In addition to the general transfer conditions specified in Section 4, the following must be provided:

- A complete Bridge Maintenance Manual with recommended inspection intervals, materials specifications, and preventive maintenance schedules
- A certified cost estimate of anticipated life-cycle maintenance for the Bridge over a 75-year horizon
- All manufacturer and contractor warranties and any Bridge instrumentation records

6.4 Extended Warranty and Post-Transfer Support – The Authority shall provide a five-year extended warranty for structural defects in the Bridge, commencing upon County's Notice of Acceptance. During this period, the Authority shall:

- Conduct annual inspections and submit findings to the County
- Repair or replace any components deemed to have material defects or premature deterioration
- Coordinate with the County to address any identified deficiencies at no cost to the County

6.5 County Maintenance Support Contribution - As a condition of Notice of Acceptance, the Authority shall:

- Establish a Bridge Maintenance Fund or make a one-time lump-sum payment to the County in an amount to be mutually agreed upon, based on the Bridge estimated life-cycle maintenance cost
- The purpose of this contribution is to defray the County's long-term maintenance burden attributable to the Bridge

NOTICE OF PUBLIC HEARING: FOR THE COUNTY OF COLUSA AND SITES PROJECT AUTHORITY DEVELOPMENT AGREEMENT

NOTICE IS HEREBY GIVEN THAT that the Colusa County Planning Commission will conduct a Public Hearing on Wednesday, October 1, 2025 beginning at 9:00 a.m. in the Board of Supervisors Chambers located at 546 Jay Street, Suite 108, Colusa, CA, to consider the following:

Public Hearing: The Planning Commission will hold a public hearing to consider the Development Agreement by and between the County of Colusa and Sites Project Authority and whether to adopt a resolution that would recommend that the Board of Supervisors approve said Development Agreement for the development and operation of the Sites Reservoir Project. The State of California Development Agreement Act authorizes the County to enter into binding development agreements establishing certain development rights in real property with persons having legal or equitable interests in such property. All persons are invited to attend and be heard.

Project Location/Description: The Sites Reservoir Project, a proposed 1.3 – 1.5 million acre-foot off-stream reservoir, will be located approximately 10 miles west of the town of Maxwell, California, and will provide water storage and supply for the entities that pay to participate and receive benefits, including the County of Colusa, as well as provide public benefits, including environmental water supply, recreation, and regional flood control benefits. The proposed Development Agreement outlines County procedures and actions, purpose and applicability of the Agreement, best management practices, community benefits, assurances by both parties, impacts to existing and new County roads and crossing structures, default and general provisions.

If you have questions or concerns regarding this matter, or would like to submit comments, you may do so to the following: Secretary to the Planning Commission, 1213 Market Street, Colusa, CA (530)458-0480, or by e-mail at xfowler@countyofcolusaca.gov

If you challenge the proposed project or environmental determination in court, you may be limited to raising only those issues you or someone else raised at the public hearing described in this notice, or in written correspondence delivered at, or prior to, the public hearing.

Dated: September 11, 2025

By: ORIGINAL SIGNED
Ann Nordyke, Clerk

09/19/2025 · CCPR

WILLIAMS PIONEER REVIEW: Please publish on
Friday, September 19, 2025
POSTED: At the Colusa Courthouse on August 11, 2025

NOTICE OF PUBLIC HEARING:
FOR THE COUNTY OF COLUSA AND SITES PROJECT AUTHORITY DEVELOPMENT AGREEMENT

NOTICE IS HEREBY GIVEN THAT that the Colusa County Planning Commission will conduct a Public Hearing on Wednesday, **October 1, 2025 beginning at 9:00 a.m.** in the Board of Supervisors Chambers located at 546 Jay Street, Suite 108, Colusa, CA, to consider the following:

Public Hearing: The Planning Commission will hold a public hearing to consider the Development Agreement by and between the County of Colusa and Sites Project Authority and whether to adopt a resolution that would recommend that the Board of Supervisors approve said Development Agreement for the development and operation of the Sites Reservoir Project. The State of California Development Agreement Act authorizes the County to enter into binding development agreements establishing certain development rights in real property with persons having legal or equitable interests in such property. All persons are invited to attend and be heard.

Project Location/Description: The Sites Reservoir Project, a proposed 1.3 – 1.5 million acre-foot off-stream reservoir, will be located approximately 10 miles west of the town of Maxwell, California, and will provide water storage and supply for the entities that pay to participate and receive benefits, including the County of Colusa, as well as provide public benefits, including environmental water supply, recreation, and regional flood control benefits. The proposed Development Agreement outlines County procedures and actions, purpose and applicability of the Agreement, best management practices, community benefits, assurances by both parties, impacts to existing and new County roads and crossing structures, default and general provisions.

If you have questions or concerns regarding this matter, or would like to submit comments, you may do so to the following: Secretary to the Planning Commission, 1213 Market Street, Colusa, CA (530)458-0480, or by e-mail at xfowler@countyofcolusaca.gov

If you challenge the proposed project or environmental determination in court, you may be limited to raising only those issues you or someone else raised at the public hearing described in this notice, or in written correspondence delivered at, or prior to, the public hearing.

Dated: September 11, 2025

By: _____
Ann Nordyke, Clerk